AIGNEP

55000 Series



55000 Pag. 8.5	55010 Pag. 8.5	50010N 50015N Pag. 8.5 - 8.6	50020N Pag. 8.6	50030N Pag. 8.7	55040 Pag. 8.7	50050N Pag. 8.7	55050 Pag. 8.8	50055N Pag. 8.8	50465N Pag. 8.8
55060 Pag. 8.9	55106 Pag. 8.9	55111 Pag. 8.9	55116 Pag. 8.10	55126 Pag. 8.10	55130 Pag. 8.11	55140 Pag. 8.11	55150 Pag. 8.11	55160 Pag. 8.12	55170 Pag. 8.12
55175 Pag. 8.12	55180 Pag. 8.13	55211 Pag. 8.13	55216 Pag. 8.13	55223 Pag. 8.14	55226 Pag. 8.14	55230 Pag. 8.14	55235 Pag. 8.15	55237 Pag. 8.15	55240 Pag. 8.15
55310 Pag. 8.16	55315 Pag. 8.16	55320 Pag. 8.16	55325 Pag. 8.17	55330 Pag. 8.17	55340 Pag. 8.17	55345 Pag. 8.18	55350 Pag. 8.18	55360 Pag. 8.18	55365 Pag. 8.19
55500 Pag. 8.20	55510 Pag. 8.20	55520 Pag. 8.20	55410 Pag. 8.21	55420 Pag. 8.21	55430 Pag. 8.21	55440 Pag. 8.21	50600 Pag. 8.22	50610 Pag. 8.22	55620 Pag. 8.23
50625 Pag. 8.23	55625 Pag. 8.23	50700N Pag. 8.24	55700 Pag. 8.24	55705 Pag. 8.24	55800N Pag. 8.25	55801 Pag. 8.26	55802 Pag. 8.26	50900N Pag. 8.27	50980 Pag. 8.27
50990 Pag. 8.27	50006 Pag. 8.28								

Click here to view the 55000 Series on our Website

AIGNEP

56000 Mini Series



56010 Pag. 8.29	56020 Pag. 8.29	56040 Pag. 8.29	56050 Pag. 8.30	56115 Pag. 8.30	56130 Pag. 8.30	56215 Pag. 8.31	56225 Pag. 8.31	56230 Pag. 8.31	56550 Pag. 8.31

Click here to view the 56000 Series on our Website

AIGNEP

AIGNEP

METRIC TECHNOPOLYMER PUSH-TO-CONNECT FITTINGS



55 - 56 Series

55000
56000
METRIC

TECHNICAL CHARACTERISTICS

Standard Reference

1907/2006 REACH ✓ | 2011/65/CE RoHS | PED 2014/68/UE | ISO 14743:2020 | SILICON FREE

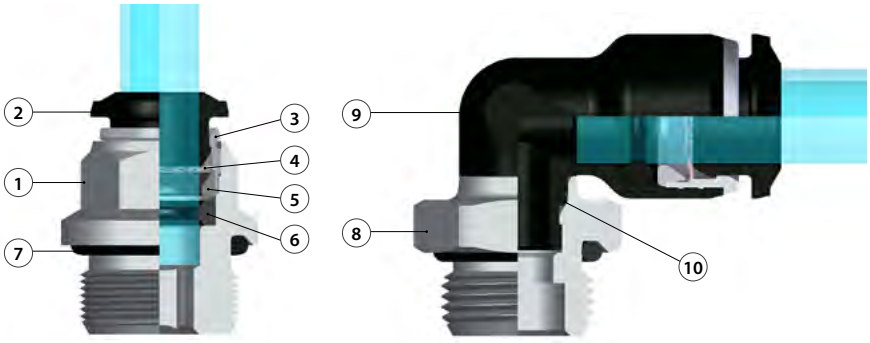

Component Parts and Materials

1. Nickel-plated brass body
2. Acetal resin collet
3. Nickel-plated brass capsule
4. AISI 301 steel clamping washer
5. Technopolymer positioning ring
6. NBR molded seal
7. NBR thread seal
8. Nickel-plated brass threaded base
9. Technopolymer PA body
10. NBR seal

Pressure Rating

Vacuum ~ 290 psi
-0.99 bar ~ 20 bar
-0.099 MPa ~ 2.0 MPa

Temperature Rating

NBR	-4 °F ~ 176 °F
	-20 °C ~ 80 °C

Media

- Compressed Air
- Vacuum
- Water

Tubing Compatibility

Nylon 6 - 11 -12
Polyethylene
Polyurethane (98 Shore A for best results)
PTFE
FEP

SWIFTFIT Universal thread

One fitting... Endless possibilities

NPT NPTF	ISO 7 BSPP - PF	ISO 7 BSPT - PT	ISO 228 BSP
TAPERED	PARALLEL	TAPERED	PARALLEL



INCLINED CONCAVE CONVEX

Torque Specifications

Recommended Torque		
Thread Size	Min.	Max.
1/8	5 Nm	7 Nm
1/4	5 Nm	7 Nm
3/8	5 Nm	7 Nm
1/2	5 Nm	7 Nm

All SWIFTFIT fittings have been equipped with threads and an NBR thread seal that will universally connect to all thread types.
Our SWIFTFIT universal fittings also work on non-flat surfaces without compromising their airtight seal.

BSP Threads

Standard ISO 228 and ISO R/262

Designed for use in BSP connections with an integrated NBR O-ring that provides a perfect seal



Torque Specifications

Recommended Torque		
Thread Size	**Min.**	**Breaking torque**
M5	0.8 Nm	3.2 Nm
M7	3 Nm	8 Nm
M8	3 Nm	8 Nm
1/2	3 Nm	8 Nm
1/4	9 Nm	30 Nm
3/8	10 Nm	60 Nm
1/2	12 Nm	50 Nm

Advantages

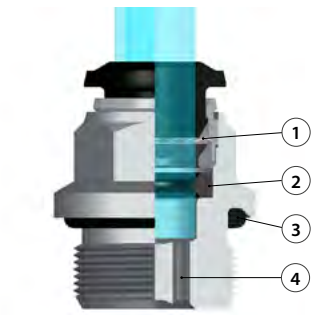

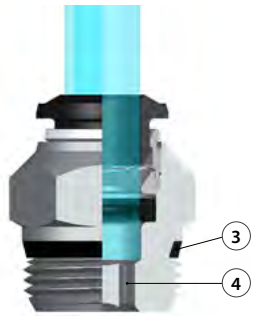

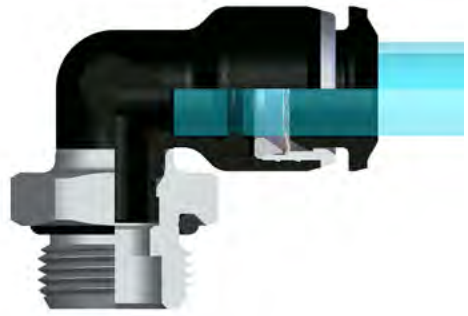

Advantages

1 The washer is made in stainless steel ensures the perfect tube clamping with every kind of material without damage the surface. The connection between the tube and the fitting ensures a total tightness even in severe conditions such as impact and vibrations.

2 The particular geometric shape of the seal ensures the perfect tightness even with vacuum.

3 All of threads from this range have been equipped with tightening parts which allow the direct assembly of the fittings, reducing the installation time.

4 All the straight fittings can be assembled also with Allen wrench and it is possible to use them in reduced spaces.

56000 SERIES "MINI"

56010

BSP

STRAIGHT MALE ADAPTOR (PARALLEL) WITH HEXAGON EMBEDDED



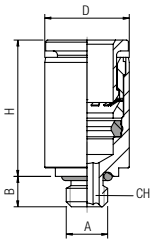

Code	Usa Ref	Tube	A	B	H	D	CH	Pack.
56010 00 006	56010-4-M3	5/32 (4)	M3	.118 (3)	.591 (15)	.315 (8)	.059 (1.5)	10
56010 00 001	56010-4-M5	5/32 (4)	M5	.142 (3.6)	.551 (14)	.335 (8.5)	.098 (2.5)	10
56010 00 002	56010-4-M7	5/32 (4)	M7	.197 (5)	.551 (14)	.394 (10)	.118 (3)	10
56010 00 003	56010-6-M5	6	M5	.142 (3.6)	.630 (16)	.394 (10)	.098 (2.5)	10
56010 00 004	56010-6-M7	6	M7	.197 (5)	.630 (16)	.394 (10)	.157 (4)	10

56020

BSP

STRAIGHT MALE ADAPTOR (PARALLEL)



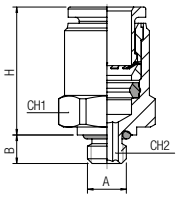

Code	Usa Ref	Tube	A	B	H	CH1	CH2	Pack.
56020 00 001	56020-2-M3	2	M3	.118 (3)	.433 (11)	.236 (6)	.059 (1.5)	10
56020 00 002	56020-2-M5	2	M5	.157 (4)	.354 (9)	.276 (7)	.059 (1.5)	10
56020 00 003	56020-3-M3	3	M3	.118 (3)	.433 (11)	.236 (6)	.059 (1.5)	10
56020 00 004	56020-3-M5	3	M5	.157 (4)	.394 (10)	.276 (7)	.079 (2)	10
56020 00 005	56020-4-M3	5/32 (4)	M3	.118 (3)	.571 (14.5)	.315 (8)	-	10
56020 00 006	56020-4-M5	5/32 (4)	M5	.142 (3.6)	.551 (14)	.354 (9)	.098 (2.5)	10
56020 00 007	56020-4-M7	5/32 (4)	M7	.197 (5)	.551 (14)	.394 (10)	.118 (3)	10
56020 00 008	56020-4-1/8	5/32 (4)	1/8	.197 (5)	.453 (11.5)	.512 (13)	.118 (3)	10
56020 00 009	56020-6-M5	6	M5	.142 (3.6)	.630 (16)	.433 (11)	.098 (2.5)	10
56020 00 010	56020-6-M7	6	M7	.197 (5)	.630 (16)	.394 (10)	.118 (3)	10
56020 00 011	56020-6-1/8	6	1/8	.197 (5)	.531 (13.5)	.512 (13)	.157 (4)	10
56020 00 012	56020-6-1/4	6	1/4	.280 (7.1)	.472 (12)	.630 (16)	.157 (4)	10

56040

STRAIGHT CONNECTOR



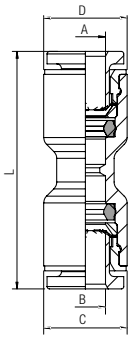

Code	Usa Ref	A	B	C	L	D	Pack.
56040 00 003	56040-4-4	5/32 (4)	5/32 (4)	.335 (8.5)	.984 (25)	.335 (8.5)	10
56040 00 004	56040-6-6	6	6	.413 (10.5)	1.102 (28)	.413 (10.5)	10
56040 00 005	56040-8-6	5/16 (8)	6	.413 (10.5)	1.358 (34.5)	.551 (14)	10

56050

BULKHEAD CONNECTOR

Code	Usa Ref	Tube	M	L	CH	A max	Pack.
56050 00 003	56050-4	5/32 (4)	M10x1	.984 (25)	.512 (13)	.217 (5.5)	10
56050 00 004	56050-6	6	M12x1	1.102 (28)	.591 (15)	.335 (8.5)	10



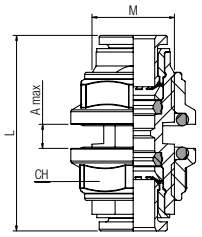

56115

BSP

ORIENTING ELBOW MALE ADAPTOR (PARALLEL)

Code	Usa Ref	Tube	A	B	H	L	D	CH	Pack.
56115 00 001	56115-2-M3	2	M3	.118 (3)	.512 (13)	.433 (11)	.256 (6.5)	.315 (8)	10
56115 00 002	56115-2-M5	2	M5	.157 (4)	.492 (12.5)	.433 (11)	.256 (6.5)	.315 (8)	10
56115 00 003	56115-3-M3	3	M3	.118 (3)	.512 (13)	.433 (11)	.256 (6.5)	.315 (8)	10
56115 00 004	56115-3-M5	3	M5	.157 (4)	.492 (12.5)	.433 (11)	.256 (6.5)	.315 (8)	10
56115 00 013	56115-4-M3	5/32 (4)	M3	.118 (3)	.571 (14.5)	.551 (14)	.335 (8.5)	.315 (8)	10
56115 00 005	56115-4-M5	5/32 (4)	M5	.142 (3.6)	.531 (13.5)	.551 (14)	.335 (8.5)	.315 (8)	10
56115 00 006	56115-4-1/8	5/32 (4)	1/8	.197 (5)	.512 (13)	.551 (14)	.335 (8.5)	.512 (13)	10
56115 00 007	56115-4-1/4	5/32 (4)	1/4	.280 (7.1)	.531 (13.5)	.551 (14)	.335 (8.5)	.630 (16)	10
56115 00 008	56115-6-M5	6	M5	.142 (3.6)	.610 (15.5)	.630 (16)	.413 (10.5)	.315 (8)	10
56115 00 011	56115-6-M7	6	M7x1	.197 (5)	.630 (16)	.630 (16)	.413 (10.5)	.354 (9)	10
56115 00 009	56115-6-1/8	6	1/8	.197 (5)	.591 (15)	.630 (16)	.413 (10.5)	.512 (13)	10
56115 00 010	56115-6-1/4	6	1/4	.280 (7.1)	.610 (15.5)	.630 (16)	.413 (10.5)	.630 (16)	10



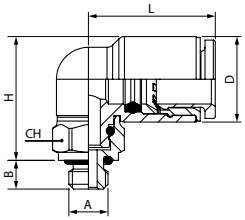

56130

EQUAL ELBOW

Code	Usa Ref	Tube	L	D	Pack.
56130 00 001	56130-2	2	.571 (14.5)	.256 (6.5)	10
56130 00 002	56130-3	3	.571 (14.5)	.256 (6.5)	10
56130 00 003	56130-4	5/32 (4)	.748 (19)	.335 (8.5)	10
56130 00 004	56130-6	6	.886 (22.5)	.413 (10.5)	10



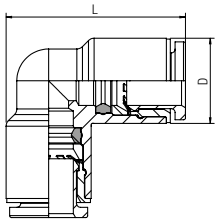

56215

BSP

ORIENTING TEE MALE ADAPTOR (PARALLEL) – CENTER LEG

Code	Usa Ref	Tube	A	B	H	L	D	CH	Pack.
56215 00 001	56215-2-M3	2	M3	.118 (3)	.512 (13)	.866 (22)	.256 (6.5)	.315 (8)	10
56215 00 002	56215-2-M5	2	M5	.157 (4)	.492 (12.5)	.866 (22)	.256 (6.5)	.315 (8)	10
56215 00 003	56215-3-M3	3	M3	.118 (3)	.512 (13)	.866 (22)	.256 (6.5)	.315 (8)	10
56215 00 004	56215-3-M5	3	M5	.157 (4)	.492 (12.5)	.866 (22)	.256 (6.5)	.315 (8)	10



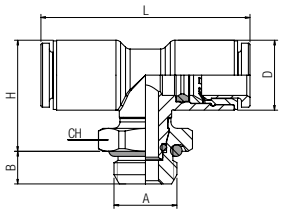

56225

BSP

ORIENTING TEE MALE ADAPTOR (PARALLEL) – OFF-SET LEG

Code	Usa Ref	Tube	A	B	H	L	D	CH	Pack.
56225 00 001	56225-2-M3	2	M3	.118 (3)	.827 (21)	.433 (11)	.256 (6.5)	.315 (8)	10
56225 00 002	56225-2-M5	2	M5	.157 (4)	.827 (21)	.433 (11)	.256 (6.5)	.315 (8)	10
56225 00 003	56225-3-M3	3	M3	.118 (3)	.827 (21)	.433 (11)	.256 (6.5)	.315 (8)	10
56225 00 004	56225-3-M5	3	M5	.157 (4)	.827 (21)	.433 (11)	.256 (6.5)	.315 (8)	10



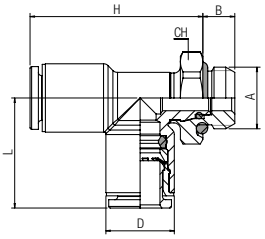

56230

TEE CONNECTOR

Code	Usa Ref	Tube	H	L	D	Pack.
56230 00 001	56230-2	2	.571 (14.5)	.866 (22)	.256 (6.5)	10
56230 00 002	56230-3	3	.571 (14.5)	.866 (22)	.256 (6.5)	10
56230 00 003	56230-4	5/32 (4)	.748 (19)	1.142 (29)	.335 (8.5)	10
56230 00 004	56230-6	6	.886 (22.5)	1.358 (34.5)	.413 (10.5)	10



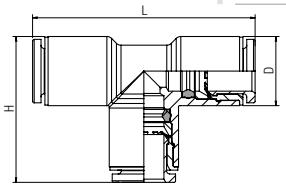

56550

BSP

ORIENTING SINGLE BANJO BODY MALE

Code	Usa Ref	Tube	A	B	H	L	E	D	CH	Pack.
56550 00 003	56550-3-M3	3	M3	.118 (3)	.413 (10.5)	.610 (15.5)	.236 (6)	.276 (7)	.079 (2)	10
56550 00 004	56550-3-M5	3	M5	.157 (4)	.413 (10.5)	.610 (15.5)	.236 (6)	.276 (7)	.079 (2)	10



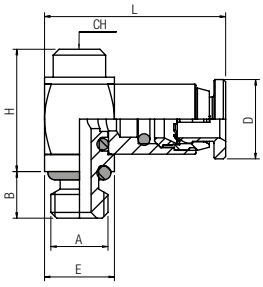

NOTES