Functional Series

INCH TUBE



88000
Pag. 13.5



85000
Pag. 13.7



88000
Pag. 13.9

Functional Series

METRIC TUBE



50000N
Pag. 13.11



55000
Pag. 13.13

Flow Regulators - Quick Exhaust Valves - Slide Valves - Unidirectional Valves Or Non Return Valves Block Valves



82815
82830
Pag. 13.15



82820
82835
Pag. 13.15



85940
Pag. 13.16



85945
Pag. 13.16



85950
Pag. 13.17



85955
Pag. 13.17



85960
Pag. 13.18



82850
82860
Pag. 13.20



82650
Pag. 13.21



82660
Pag. 13.22



82662
Pag. 13.24



WB020
Pag. 13.24



WB046
Pag. 13.24



WB033
Pag. 13.24



82880
82890
Pag. 13.27 - 13.28

Click here to view the Functional Series on our Website

AIGNEP

FUNCTIONAL FITTINGS



Functional Series

FUNCTION

TECHNICAL CHARACTERISTICS

Standard Reference

1907/2006 REACH ✓ | 2011/65/CE RoHS | PED 2014/68/UE | ISO 14743:2020 | SILICON FREE

Screwdriver regulation

Manual regulation

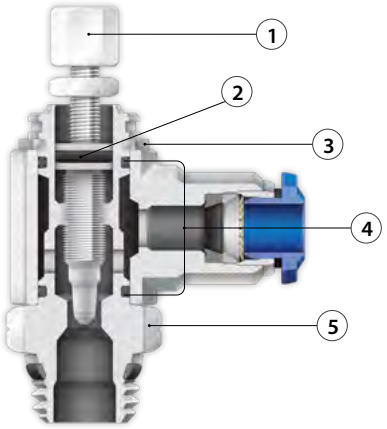

Component Parts and Materials

1 Nickel-plated brass adjustment screw
2 NBR 70 O-ring
3 303 stainless steel shaft clip
4 NBR 70 O-ring
5 Nickel-plated brass body

Pressure Rating

Vacuum ~ 145 psi
-0.99 bar ~ 10 bar
-0.099 MPa ~ 1.0 MPa

Temperature Rating

NBR -4 °F ~ 176 °F
-20 °C ~ 80 °C

Media

- Compressed Air

Tubing Compatibility

Nylon 11
Nylon 12
Polyethylene
Polyurethane

SWIFTFIT Universal thread

One fitting... Endless possibilities

NPT NPTF TAPERED	ISO 7 BSPP - PF PARALLEL	ISO 7 BSPT - PT TAPERED	ISO 228 BSP PARALLEL



INCLINED CONCAVE CONVEX

Torque Specifications

Recommended Torque		
Thread Size	**Min.**	**Max.**
1/8	5 Nm	7 Nm
1/4	5 Nm	7 Nm
3/8	5 Nm	7 Nm
1/2	5 Nm	7 Nm

All SWIFTFIT fittings have been equipped with threads and an NBR thread seal that will universally connect to all thread types.
Our SWIFTFIT universal fittings also work on non-flat surfaces without compromising their airtight seal.

C

CONTROLLED FLOW OUT

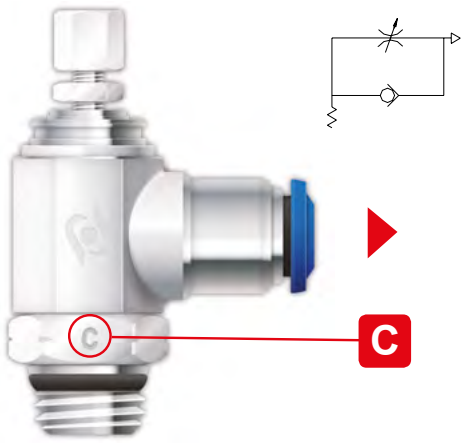

Code:

INCH
88953 - 88958 - 85953 - 85958
88952 - 88957

METRIC
50901N - 50905N - 55900 - 55905

V

CONTROLLED FLOW IN

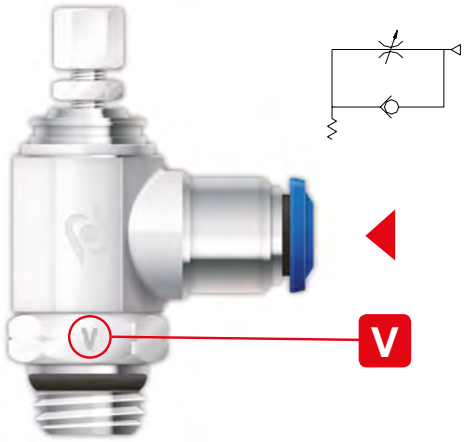

Code:

INCH
88963 - 88968 - 85963 - 85968
88962 - 88967

METRIC
50910N - 50915N - 55910 - 55915

B

BI-DIRECTIONAL FLOW

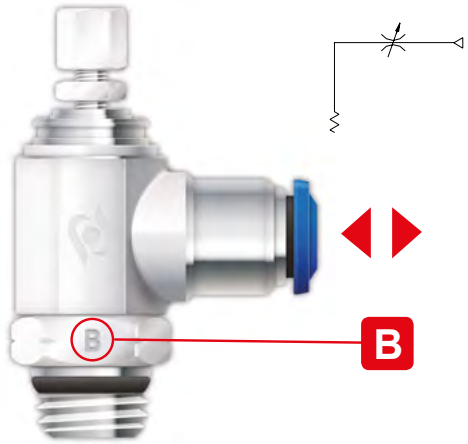

Code:

INCH
88973 - 88978 - 85973 - 85978
88972 - 88977

METRIC
50920N - 50925N - 55920 - 55925

KEY — Screw Adjust — Knob Adjust

88953

INCH TUBE FLOW CONTROL (OUT)

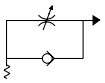

C



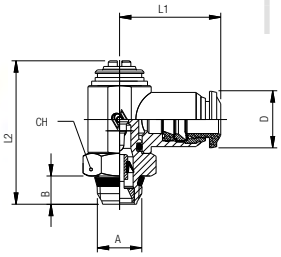

Code	Usa Ref	Tube	A	B	L1	L2	CH	D	Pack
88953 00 001	88953-02-32	1/8	10/32	.157 (4)	.748 (19)	.827 (21)	.315 (8)	.394 (10)	10
88953 00 002	88953-02-02	1/8	1/8	.217 (5.5)	.827 (21)	1.201 (30.5)	.551 (14)	.394 (10)	10
88953 00 003	88953-53-32	5/32 (4)	10/32	.157 (4)	.748 (19)	.827 (21)	.315 (8)	.394 (10)	10
88953 00 004	88953-53-02	5/32 (4)	1/8	.217 (5.5)	.827 (21)	1.201 (30.5)	.551 (14)	.394 (10)	10
88953 00 005	88953-04-02	1/4	1/8	.217 (5.5)	.866 (22)	1.201 (30.5)	.551 (14)	.492 (12.5)	10
88953 00 006	88953-04-04	1/4	1/4	.276 (7)	.984 (25)	1.417 (36)	.669 (17)	.492 (12.5)	10
88953 00 007	88953-06-04	3/8	1/4	.295 (7.5)	1.201 (30.5)	1.614 (41)	.787 (20)	.689 (17.5)	10
88953 00 008	88953-06-06	3/8	3/8	.295 (7.5)	1.201 (30.5)	1.614 (41)	.787 (20)	.689 (17.5)	10
88953 00 009	88953-08-06	1/2	3/8	.295 (7.5)	1.280 (32.5)	1.614 (41)	.787 (20)	.846 (21.5)	10
88953 00 010	88953-08-08	1/2	1/2	.354 (9)	1.378 (35)	1.850 (47)	.945 (24)	.846 (21.5)	10

88963

INCH TUBE FLOW CONTROL (IN)

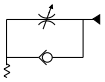

V



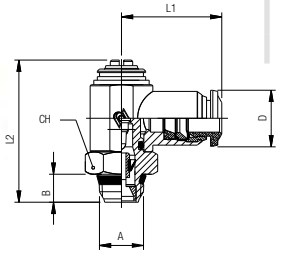

Code	Usa Ref	Tube	A	B	L1	L2	CH	D	Pack
88963 00 001	88963-02-32	1/8	10/32	.157 (4)	.748 (19)	.827 (21)	.315 (8)	.394 (10)	10
88963 00 002	88963-02-02	1/8	1/8	.217 (5.5)	.827 (21)	1.201 (30.5)	.551 (14)	.394 (10)	10
88963 00 003	88963-53-32	5/32 (4)	10/32	.157 (4)	.748 (19)	.827 (21)	.315 (8)	.394 (10)	10
88963 00 004	88963-53-02	5/32 (4)	1/8	.217 (5.5)	.827 (21)	1.201 (30.5)	.551 (14)	.394 (10)	10
88963 00 005	88963-04-02	1/4	1/8	.217 (5.5)	.866 (22)	1.201 (30.5)	.551 (14)	.492 (12.5)	10
88963 00 006	88963-04-04	1/4	1/4	.276 (7)	.984 (25)	1.417 (36)	.669 (17)	.492 (12.5)	10
88963 00 007	88963-06-04	3/8	1/4	.295 (7.5)	1.201 (30.5)	1.614 (41)	.787 (20)	.689 (17.5)	10
88963 00 008	88963-06-06	3/8	3/8	.295 (7.5)	1.201 (30.5)	1.614 (41)	.787 (20)	.689 (17.5)	10
88963 00 009	88963-08-06	1/2	3/8	.295 (7.5)	1.280 (32.5)	1.614 (41)	.787 (20)	.846 (21.5)	10
88963 00 010	88963-08-08	1/2	1/2	.354 (9)	1.378 (35)	1.850 (47)	.945 (24)	.846 (21.5)	10

88973

INCH TUBE NEEDLE VALVE



B



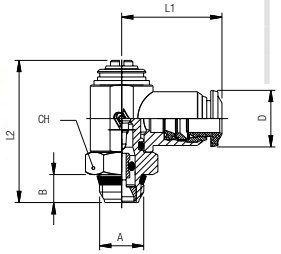

Code	Usa Ref	Tube	A	B	L1	L2	CH	D	Pack
88973 00 001	88973-02-32	1/8	10/32	.157 (4)	.748 (19)	.827 (21)	.315 (8)	.394 (10)	10
88973 00 002	88973-02-02	1/8	1/8	.217 (5.5)	.827 (21)	1.201 (30.5)	.551 (14)	.394 (10)	10
88973 00 003	88973-53-32	5/32 (4)	10/32	.157 (4)	.748 (19)	.827 (21)	.315 (8)	.394 (10)	10
88973 00 004	88973-53-02	5/32 (4)	1/8	.217 (5.5)	.827 (21)	1.201 (30.5)	.551 (14)	.394 (10)	10
88973 00 005	88973-04-02	1/4	1/8	.217 (5.5)	.866 (22)	1.201 (30.5)	.551 (14)	.492 (12.5)	10
88973 00 006	88973-04-04	1/4	1/4	.276 (7)	.984 (25)	1.417 (36)	.669 (17)	.492 (12.5)	10
88973 00 007	88973-06-04	3/8	1/4	.295 (7.5)	1.201 (30.5)	1.614 (41)	.787 (20)	.689 (17.5)	10
88973 00 008	88973-06-06	3/8	3/8	.295 (7.5)	1.201 (30.5)	1.614 (41)	.787 (20)	.689 (17.5)	10
88973 00 009	88973-08-06	1/2	3/8	.295 (7.5)	1.280 (32.5)	1.614 (41)	.787 (20)	.846 (21.5)	10
88973 00 010	88973-08-08	1/2	1/2	.354 (9)	1.378 (35)	1.850 (47)	.945 (24)	.846 (21.5)	10

88958

INCH TUBE FLOW CONTROL (OUT)

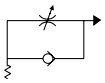

SWIFTFIT Universal thread

C



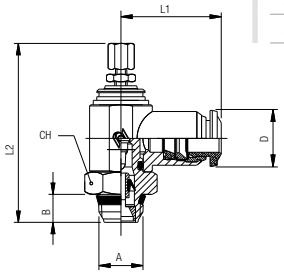

Code	Usa Ref	Tube	A	B	L1	L2 min	L2 max	CH	D	Pack
88958 00 001	88958-02-32	1/8	10/32	.157 (4)	.748 (19)	1.299 (33)	1.476 (37.5)	.315 (8)	.394 (10)	10
88958 00 002	88958-02-02	1/8	1/8	.217 (5.5)	.827 (21)	1.614 (41)	1.831 (46.5)	.551 (14)	.394 (10)	10
88958 00 003	88958-53-32	5/32 (4)	10/32	.157 (4)	.748 (19)	1.299 (33)	1.476 (37.5)	.315 (8)	.394 (10)	10
88958 00 004	88958-53-02	5/32 (4)	1/8	.217 (5.5)	.827 (21)	1.614 (41)	1.831 (46.5)	.551 (14)	.394 (10)	10
88958 00 005	88958-04-02	1/4	1/8	.217 (5.5)	.866 (22)	1.614 (41)	1.831 (46.5)	.551 (14)	.492 (12.5)	10
88958 00 006	88958-04-04	1/4	1/4	.276 (7)	.984 (25)	1.850 (47)	2.087 (53)	.669 (17)	.492 (12.5)	10
88958 00 007	88958-06-04	3/8	1/4	.295 (7.5)	1.201 (30.5)	2.205 (56)	2.480 (63)	.787 (20)	.689 (17.5)	10
88958 00 008	88958-06-06	3/8	3/8	.295 (7.5)	1.201 (30.5)	2.205 (56)	2.480 (63)	.787 (20)	.689 (17.5)	10
88958 00 009	88958-08-06	1/2	3/8	.295 (7.5)	1.280 (32.5)	2.205 (56)	2.480 (63)	.787 (20)	.846 (21.5)	10
88958 00 010	88958-08-08	1/2	1/2	.354 (9)	1.378 (35)	2.402 (61)	2.717 (69)	.945 (24)	.846 (21.5)	10

88968

INCH TUBE FLOW CONTROL (IN)

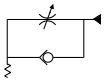

SWIFTFIT Universal thread

V



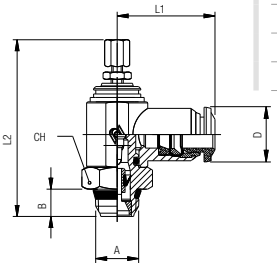

Code	Usa Ref	Tube	A	B	L1	L2 min	L2 max	CH	D	Pack
88968 00 001	88968-02-32	1/8	10/32	.157 (4)	.748 (19)	1.299 (33)	1.476 (37.5)	.315 (8)	.394 (10)	10
88968 00 002	88968-02-02	1/8	1/8	.217 (5.5)	.827 (21)	1.614 (41)	1.831 (46.5)	.551 (14)	.394 (10)	10
88968 00 003	88968-53-32	5/32 (4)	10/32	.157 (4)	.748 (19)	1.299 (33)	1.476 (37.5)	.315 (8)	.394 (10)	10
88968 00 004	88968-53-02	5/32 (4)	1/8	.217 (5.5)	.827 (21)	1.614 (41)	1.831 (46.5)	.551 (14)	.394 (10)	10
88968 00 005	88968-04-02	1/4	1/8	.217 (5.5)	.866 (22)	1.614 (41)	1.831 (46.5)	.551 (14)	.492 (12.5)	10
88968 00 006	88968-04-04	1/4	1/4	.276 (7)	.984 (25)	1.850 (47)	2.087 (53)	.669 (17)	.492 (12.5)	10
88968 00 007	88968-06-04	3/8	1/4	.295 (7.5)	1.201 (30.5)	2.205 (56)	2.480 (63)	.787 (20)	.689 (17.5)	10
88968 00 008	88968-06-06	3/8	3/8	.295 (7.5)	1.201 (30.5)	2.205 (56)	2.480 (63)	.787 (20)	.689 (17.5)	10
88968 00 009	88968-08-06	1/2	3/8	.295 (7.5)	1.280 (32.5)	2.205 (56)	2.480 (63)	.787 (20)	.846 (21.5)	10
88968 00 010	88968-08-08	1/2	1/2	.354 (9)	1.378 (35)	2.205 (56)	2.717 (69)	.945 (24)	.846 (21.5)	10

88978

INCH TUBE NEEDLE VALVE



SWIFTFIT Universal thread

B



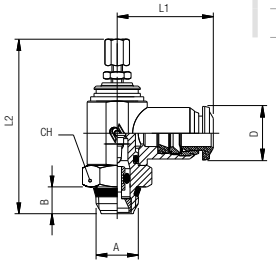

Code	Part No.	Tube	A	B	L1	L2 min	L2 max	CH	D	Pack
88978 00 001	88978-02-32	1/8	10/32	.157 (4)	.748 (19)	1.299 (33)	1.476 (37.5)	.315 (8)	.394 (10)	10
88978 00 002	88978-02-02	1/8	1/8	.217 (5.5)	.827 (21)	1.614 (41)	1.831 (46.5)	.551 (14)	.394 (10)	10
88978 00 003	88978-53-32	5/32 (4)	10/32	.157 (4)	.748 (19)	1.299 (33)	1.476 (37.5)	.315 (8)	.394 (10)	10
88978 00 004	88978-53-02	5/32 (4)	1/8	.217 (5.5)	.827 (21)	1.614 (41)	1.831 (46.5)	.551 (14)	.394 (10)	10
88978 00 005	88978-04-02	1/4	1/8	.217 (5.5)	.866 (22)	1.614 (41)	1.831 (46.5)	.551 (14)	.492 (12.5)	10
88978 00 006	88978-04-04	1/4	1/4	.276 (7)	.984 (25)	1.850 (47)	2.087 (53)	.669 (17)	.492 (12.5)	10
88978 00 007	88978-06-04	3/8	1/4	.295 (7.5)	1.201 (30.5)	2.205 (56)	2.480 (63)	.787 (20)	.689 (17.5)	10
88978 00 008	88978-06-06	3/8	3/8	.295 (7.5)	1.201 (30.5)	2.205 (56)	2.480 (63)	.787 (20)	.689 (17.5)	10
88978 00 009	88978-08-06	1/2	3/8	.295 (7.5)	1.280 (32.5)	2.205 (56)	2.480 (63)	.787 (20)	.846 (21.5)	10
88978 00 010	88978-08-08	1/2	1/2	.354 (9)	1.378 (35)	2.402 (61)	2.717 (69)	.945 (24)	.846 (21.5)	10

85953

INCH TUBE FLOW CONTROL (OUT)

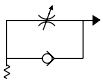

C



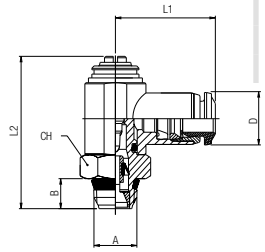

Code	Usa Ref	Tube	A	B	L1	L2	CH	D	Pack
85953 00 001	85953-02-32	1/8	10/32	.157 (4)	.748 (19)	.827 (21)	.315 (8)	.394 (10)	10
85953 00 002	85953-02-02	1/8	1/8	.217 (5.5)	.827 (21)	1.201 (30.5)	.551 (14)	.394 (10)	10
85953 00 003	85953-53-32	5/32 (4)	10/32	.157 (4)	.748 (19)	.827 (21)	.315 (8)	.394 (10)	10
85953 00 004	85953-53-02	5/32 (4)	1/8	.217 (5.5)	.827 (21)	1.201 (30.5)	.551 (14)	.394 (10)	10
85953 00 005	85953-04-02	1/4	1/8	.217 (5.5)	.866 (22)	1.201 (30.5)	.551 (14)	.472 (12)	10
85953 00 006	85953-04-04	1/4	1/4	.276 (7)	.984 (25)	1.417 (36)	.669 (17)	.472 (12)	10
85953 00 007	85953-06-04	3/8	1/4	.295 (7.5)	1.201 (30.5)	1.614 (41)	.787 (20)	.669 (17)	10
85953 00 008	85953-06-06	3/8	3/8	.295 (7.5)	1.201 (30.5)	1.614 (41)	.787 (20)	.669 (17)	10
85953 00 009	85953-08-06	1/2	3/8	.295 (7.5)	1.280 (32.5)	1.614 (41)	.787 (20)	.787 (20)	10
85953 00 010	85953-08-08	1/2	1/2	.354 (9)	1.378 (35)	1.850 (47)	.945 (24)	.787 (20)	10

85963

INCH TUBE FLOW CONTROL (IN)

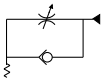

V



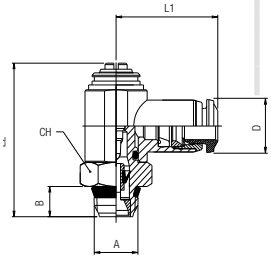

Code	Usa Ref	Tube	A	B	L1	L2	CH	D	Pack
85963 00 001	85963-02-32	1/8	10/32	.157 (4)	.748 (19)	.827 (21)	.315 (8)	.394 (10)	10
85963 00 002	85963-02-02	1/8	1/8	.217 (5.5)	.827 (21)	1.201 (30.5)	.551 (14)	.394 (10)	10
85963 00 003	85963-53-32	5/32 (4)	10/32	.157 (4)	.748 (19)	.827 (21)	.315 (8)	.394 (10)	10
85963 00 004	85963-53-02	5/32 (4)	1/8	.217 (5.5)	.827 (21)	1.201 (30.5)	.551 (14)	.394 (10)	10
85963 00 005	85963-04-02	1/4	1/8	.217 (5.5)	.866 (22)	1.201 (30.5)	.551 (14)	.472 (12)	10
85963 00 006	85963-04-04	1/4	1/4	.276 (7)	.984 (25)	1.417 (36)	.669 (17)	.472 (12)	10
85963 00 007	85963-06-04	3/8	1/4	.295 (7.5)	1.201 (30.5)	1.614 (41)	.787 (20)	.669 (17)	10
85963 00 008	85963-06-06	3/8	3/8	.295 (7.5)	1.201 (30.5)	1.614 (41)	.787 (20)	.669 (17)	10
85963 00 009	85963-08-06	1/2	3/8	.295 (7.5)	1.280 (32.5)	1.614 (41)	.787 (20)	.787 (20)	10
85963 00 010	85963-08-08	1/2	1/2	.354 (9)	1.378 (35)	1.850 (47)	.945 (24)	.787 (20)	10

85973

INCH TUBE NEEDLE VALVE



B



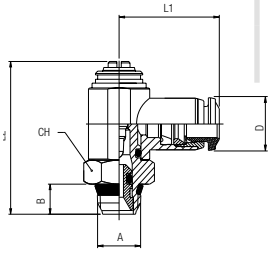

Code	Usa Ref	Tube	A	B	L1	L2	CH	D	Pack
85973 00 001	85973-02-32	1/8	10/32	.157 (4)	.748 (19)	.827 (21)	.315 (8)	.394 (10)	10
85973 00 002	85973-02-02	1/8	1/8	.217 (5.5)	.827 (21)	1.201 (30.5)	.551 (14)	.394 (10)	10
85973 00 003	85973-53-32	5/32 (4)	10/32	.157 (4)	.748 (19)	.827 (21)	.315 (8)	.394 (10)	10
85973 00 004	85973-53-02	5/32 (4)	1/8	.217 (5.5)	.827 (21)	1.201 (30.5)	.551 (14)	.394 (10)	10
85973 00 005	85973-04-02	1/4	1/8	.217 (5.5)	.866 (22)	1.201 (30.5)	.551 (14)	.472 (12)	10
85973 00 006	85973-04-04	1/4	1/4	.276 (7)	.984 (25)	1.417 (36)	.669 (17)	.472 (12)	10
85973 00 007	85973-06-04	3/8	1/4	.295 (7.5)	1.201 (30.5)	1.614 (41)	.787 (20)	.669 (17)	10
85973 00 008	85973-06-06	3/8	3/8	.295 (7.5)	1.201 (30.5)	1.614 (41)	.787 (20)	.669 (17)	10
85973 00 009	85973-08-06	1/2	3/8	.295 (7.5)	1.280 (32.5)	1.614 (41)	.787 (20)	.787 (20)	10
85973 00 010	85973-08-08	1/2	1/2	.354 (9)	1.378 (35)	1.850 (47)	.945 (24)	.787 (20)	10

85958

SWIFTFIT Universal thread

INCH TUBE FLOW CONTROL (OUT)

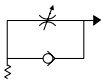

C



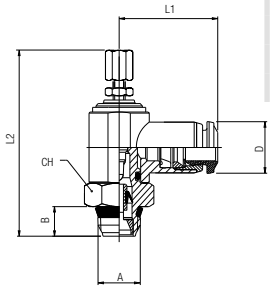

Code	Usa Ref	Tube	A	B	L1	L2 min	L2 max	CH	D	Pack
85958 00 001	85958-02-32	1/8	10/32	.157 (4)	.748 (19)	1.299 (33)	1.476 (37.5)	.315 (8)	.394 (10)	10
85958 00 002	85958-02-02	1/8	1/8	.217 (5.5)	.827 (21)	1.614 (41)	1.831 (46.5)	.551 (14)	.394 (10)	10
85958 00 003	85958-53-32	5/32 (4)	10/32	.157 (4)	.748 (19)	1.299 (33)	1.476 (37.5)	.315 (8)	.394 (10)	10
85958 00 004	85958-53-02	5/32 (4)	1/8	.217 (5.5)	.827 (21)	1.614 (41)	1.831 (46.5)	.551 (14)	.394 (10)	10
85958 00 005	85958-04-02	1/4	1/8	.217 (5.5)	.866 (22)	1.614 (41)	1.831 (46.5)	.551 (14)	.472 (12)	10
85958 00 006	85958-04-04	1/4	1/4	.276 (7)	.984 (25)	1.850 (47)	2.087 (53)	.669 (17)	.472 (12)	10
85958 00 007	85958-06-04	3/8	1/4	.295 (7.5)	1.201 (30.5)	2.205 (56)	2.480 (63)	.787 (20)	.669 (17)	10
85958 00 008	85958-06-06	3/8	3/8	.295 (7.5)	1.201 (30.5)	2.205 (56)	2.480 (63)	.787 (20)	.669 (17)	10
85958 00 009	85958-08-06	1/2	3/8	.295 (7.5)	1.280 (32.5)	2.205 (56)	2.480 (63)	.787 (20)	.787 (20)	10
85958 00 010	85958-08-08	1/2	1/2	.354 (9)	1.378 (35)	2.402 (61)	2.717 (69)	.945 (24)	.787 (20)	10

85968

SWIFTFIT Universal thread

INCH TUBE FLOW CONTROL (IN)

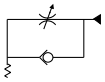

V



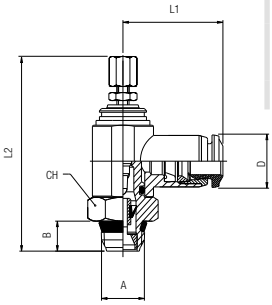

Code	Usa Ref	Tube	A	B	L1	L2 min	L2 max	CH	D	Pack
85968 00 001	85968-02-32	1/8	10/32	.157 (4)	.748 (19)	1.299 (33)	1.476 (37.5)	.315 (8)	.394 (10)	10
85968 00 002	85968-02-02	1/8	1/8	.217 (5.5)	.827 (21)	1.614 (41)	1.831 (46.5)	.551 (14)	.394 (10)	10
85968 00 003	85968-53-32	5/32 (4)	10/32	.157 (4)	.748 (19)	1.299 (33)	1.476 (37.5)	.315 (8)	.394 (10)	10
85968 00 004	85968-53-02	5/32 (4)	1/8	.217 (5.5)	.827 (21)	1.614 (41)	1.831 (46.5)	.551 (14)	.394 (10)	10
85968 00 005	85968-04-02	1/4	1/8	.217 (5.5)	.866 (22)	1.614 (41)	1.831 (46.5)	.551 (14)	.472 (12)	10
85968 00 006	85968-04-04	1/4	1/4	.276 (7)	.984 (25)	1.850 (47)	2.087 (53)	.669 (17)	.472 (12)	10
85968 00 007	85968-06-04	3/8	1/4	.295 (7.5)	1.201 (30.5)	2.205 (56)	2.480 (63)	.787 (20)	.669 (17)	10
85968 00 008	85968-06-06	3/8	3/8	.295 (7.5)	1.201 (30.5)	2.205 (56)	2.480 (63)	.787 (20)	.669 (17)	10
85968 00 009	85968-08-06	1/2	3/8	.295 (7.5)	1.280 (32.5)	2.205 (56)	2.480 (63)	.787 (20)	.787 (20)	10
85968 00 010	85968-08-08	1/2	1/2	.354 (9)	1.378 (35)	2.205 (56)	2.717 (69)	.945 (24)	.787 (20)	10

85978

SWIFTFIT Universal thread

INCH TUBE NEEDLE VALVE



B



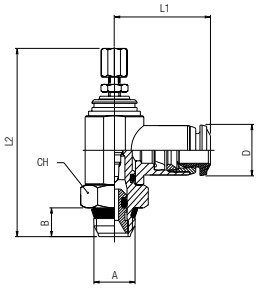

Code	Usa Ref	Tube	A	B	L1	L2 min	L2 max	CH	D	Pack
85978 00 001	85978-02-32	1/8	10/32	.157 (4)	.748 (19)	1.299 (33)	1.476 (37.5)	.315 (8)	.394 (10)	10
85978 00 002	85978-02-02	1/8	1/8	.217 (5.5)	.827 (21)	1.614 (41)	1.831 (46.5)	.551 (14)	.394 (10)	10
85978 00 003	85978-53-32	5/32 (4)	10/32	.157 (4)	.748 (19)	1.299 (33)	1.476 (37.5)	.315 (8)	.394 (10)	10
85978 00 004	85978-53-02	5/32 (4)	1/8	.217 (5.5)	.827 (21)	1.614 (41)	1.831 (46.5)	.551 (14)	.394 (10)	10
85978 00 005	85978-04-02	1/4	1/8	.217 (5.5)	.866 (22)	1.614 (41)	1.831 (46.5)	.551 (14)	.472 (12)	10
85978 00 006	85978-04-04	1/4	1/4	.276 (7)	.984 (25)	1.850 (47)	2.087 (53)	.669 (17)	.472 (12)	10
85978 00 007	85978-06-04	3/8	1/4	.295 (7.5)	1.201 (30.5)	2.205 (56)	2.480 (63)	.787 (20)	.669 (17)	10
85978 00 008	85978-06-06	3/8	3/8	.295 (7.5)	1.201 (30.5)	2.205 (56)	2.480 (63)	.787 (20)	.669 (17)	10
85978 00 009	85978-08-06	1/2	3/8	.295 (7.5)	1.280 (32.5)	2.205 (56)	2.480 (63)	.787 (20)	.787 (20)	10
85978 00 010	85978-08-08	1/2	1/2	.354 (9)	1.378 (35)	2.402 (61)	2.717 (69)	.945 (24)	.787 (20)	10

88952

FEMALE NPTF FLOW CONTROL (OUT)

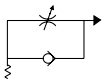

C



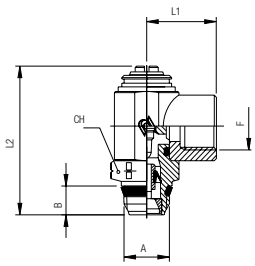

Code	Usa Ref	F NPTF	A	B	L1	L2	CH	Pack
88952 00 001	88952-32-32	10/32 UNF	10/32	.157 (4)	.394 (10)	.945 (24)	.315 (8)	10
88952 00 002	88952-02-02	1/8	1/8	.217 (5.5)	.650 (16.5)	1.201 (30.5)	.551 (14)	10
88952 00 003	88952-04-04	1/4	1/4	.276 (7)	.866 (22)	1.417 (36)	.669 (17)	10
88952 00 004	88952-06-06	3/8	3/8	.295 (7.5)	1.043 (26.5)	1.043 (26.5)	.787 (20)	10

88962

FEMALE NPTF FLOW CONTROL (IN)

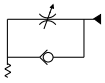

V



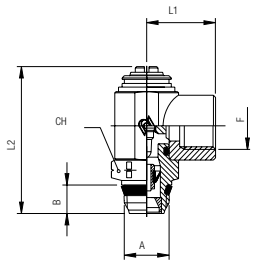

Code	Usa Ref	F NPTF	A	B	L1	L2	CH	Pack
88962 00 001	88962-32-32	10/32 UNF	10/32	.157 (4)	.394 (10)	.945 (24)	.315 (8)	10
88962 00 002	88962-02-02	1/8	1/8	.217 (5.5)	.650 (16.5)	1.201 (30.5)	.551 (14)	10
88962 00 003	88962-04-04	1/4	1/4	.276 (7)	.866 (22)	1.417 (36)	.669 (17)	10
88962 00 004	88962-06-06	3/8	3/8	.295 (7.5)	1.043 (26.5)	1.043 (26.5)	.787 (20)	10

88972

FEMALE NPTF NEEDLE VALVE



B



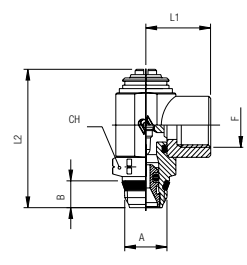

Code	Usa Ref	F NPTF	A	B	L1	L2	CH	Pack
88972 00 001	88972-32-32	10/32 UNF	10/32	.157 (4)	.394 (10)	.945 (24)	.315 (8)	10
88972 00 002	88972-02-02	1/8	1/8	.217 (5.5)	.650 (16.5)	1.201 (30.5)	.551 (14)	10
88972 00 003	88972-04-04	1/4	1/4	.276 (7)	.866 (22)	1.417 (36)	.669 (17)	10
88972 00 004	88972-06-06	3/8	3/8	.295 (7.5)	1.043 (26.5)	1.043 (26.5)	.787 (20)	10

88957

FEMALE NPTF FLOW CONTROL (OUT)

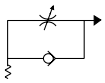

SWIFTFIT Universal thread

C



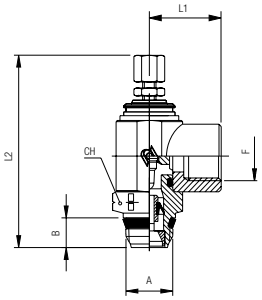

Code	Usa Ref	F NPTF	A	B	L1	L2 min	L2 max	CH	Pack
88957 00 001	88957-32-32	10/32 UNF	10/32	.157 (4)	.394 (10)	1.299 (33)	1.476 (37.5)	.315 (8)	10
88957 00 002	88957-02-02	1/8	1/8	.217 (5.5)	.650 (16.5)	1.614 (41)	1.831 (46.5)	.551 (14)	10
88957 00 003	88957-04-04	1/4	1/4	.276 (7)	.866 (22)	1.850 (47)	2.087 (53)	.669 (17)	10
88957 00 004	88957-06-06	3/8	3/8	.295 (7.5)	1.043 (26.5)	2.205 (56)	2.480 (63)	.787 (20)	10

88967

FEMALE NPTF FLOW CONTROL (IN)

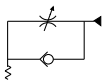

SWIFTFIT Universal thread

V



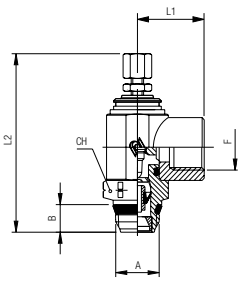

Code	Usa Ref	F NPTF	A	B	L1	L2 min	L2 max	CH	Pack
88967 00 001	88967-32-32	10/32 UNF	10/32	.157 (4)	.394 (10)	1.299 (33)	1.476 (37.5)	.315 (8)	10
88967 00 002	88967-02-02	1/8	1/8	.217 (5.5)	.650 (16.5)	1.614 (41)	1.831 (46.5)	.551 (14)	10
88967 00 003	88967-04-04	1/4	1/4	.276 (7)	.866 (22)	1.850 (47)	2.087 (53)	.669 (17)	10
88967 00 004	88967-06-06	3/8	3/8	.295 (7.5)	1.043 (26.5)	2.205 (56)	2.480 (63)	.787 (20)	10

88977

FEMALE NPTF NEEDLE VALVE



SWIFTFIT Universal thread

B



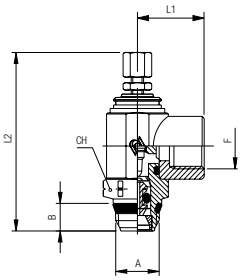

Code	Usa Ref	F NPTF	A	B	L1	L2 min	L2 max	CH	Pack
88977 00 001	88977-32-32	10/32 UNF	10/32	.157 (4)	.394 (10)	1.299 (33)	1.476 (37.5)	.315 (8)	10
88977 00 002	88977-02-02	1/8	1/8	.217 (5.5)	.650 (16.5)	1.614 (41)	1.831 (46.5)	.551 (14)	10
88977 00 003	88977-04-04	1/4	1/4	.276 (7)	.866 (22)	1.850 (47)	2.087 (53)	.669 (17)	10
88977 00 004	88977-06-06	3/8	3/8	.295 (7.5)	1.043 (26.5)	2.205 (56)	2.480 (63)	.787 (20)	10

50901N

METRIC TUBE FLOW CONTROL (OUT)

SWIFTFIT Universal thread

C

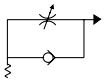



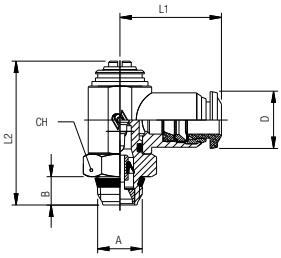

Code	Usa Ref	Tube	A	B	L1	L2	CH	D	Pack
50901 00 N01	50901N-3-M5	3	M5	.157 (4)	.748 (19)	1.161 (29.5)	.315 (8)	.394 (10)	10
50901 00 N02	50901N-4-M5	5/32 (4)	M5	.157 (4)	.748 (19)	1.161 (29.5)	.315 (8)	.394 (10)	10
50901 00 N03	50901N-4-1/8	5/32 (4)	1/8	.217 (5.5)	.827 (21)	1.220 (31)	.551 (14)	.394 (10)	10
50901 00 N04	50901N-5-M5	5	M5	.157 (4)	.787 (20)	1.161 (29.5)	.315 (8)	.492 (12.5)	10
50901 00 N05	50901N-5-1/8	5	1/8	.217 (5.5)	.846 (21.5)	1.220 (31)	.551 (14)	.492 (12.5)	10
50901 00 N06	50901N-5-1/4	5	1/4	.276 (7)	.965 (24.5)	1.437 (36.5)	.669 (17)	.492 (12.5)	10
50901 00 N07	50901N-6-M5	6	M5	.157 (4)	.807 (20.5)	1.161 (29.5)	.315 (8)	.492 (12.5)	10
50901 00 N08	50901N-6-1/8	6	1/8	.217 (5.5)	.886 (22.5)	1.220 (31)	.551 (14)	.492 (12.5)	10
50901 00 N09	50901N-6-1/4	6	1/4	.276 (7)	.984 (25)	1.437 (36.5)	.669 (17)	.492 (12.5)	10
50901 00 N10	50901N-8-1/8	5/16 (8)	1/8	.217 (5.5)	.945 (24)	1.220 (31)	.551 (14)	.551 (14)	10
50901 00 N11	50901N-8-1/4	5/16 (8)	1/4	.276 (7)	1.024 (26)	1.437 (36.5)	.669 (17)	.551 (14)	10
50901 00 N16	50901N-8-3/8	5/16 (8)	3/8	.295 (7.5)	1.122 (28.5)	1.673 (42.5)	.787 (20)	.551 (14)	10
50901 00 N17	50901N-10-1/4	10	1/4	.276 (7)	1.122 (28.5)	1.437 (36.5)	.669 (17)	.669 (17)	10
50901 00 N12	50901N-10-3/8	10	3/8	.295 (7.5)	1.201 (30.5)	1.673 (42.5)	.787 (20)	.669 (17)	10
50901 00 N13	50901N-12-3/8	12	3/8	.295 (7.5)	1.280 (32.5)	1.673 (42.5)	.787 (20)	.846 (21.5)	10
50901 00 N14	50901N-12-1/2	12	1/2	.354 (9)	1.378 (35)	1.850 (47)	.945 (24)	.846 (21.5)	10
50901 00 N15	50901N-14-1/2	14	1/2	.354 (9)	1.398 (35.5)	1.850 (47)	.945 (24)	.846 (21.5)	10

50910N

METRIC TUBE FLOW CONTROL (IN)

SWIFTFIT Universal thread

V

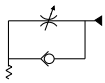



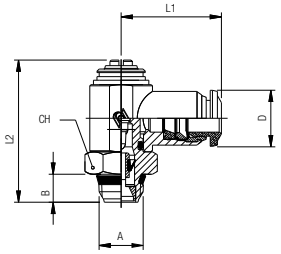

Code	Usa Ref	Tube	A	B	L1	L2	CH	D	Pack
50910 00 N01	50910N-3-M5	3	M5	.157 (4)	.748 (19)	1.161 (29.5)	.315 (8)	.394 (10)	10
50910 00 N02	50910N-4-M5	5/32 (4)	M5	.157 (4)	.748 (19)	1.161 (29.5)	.315 (8)	.394 (10)	10
50910 00 N03	50910N-4-1/8	5/32 (4)	1/8	.217 (5.5)	.827 (21)	1.220 (31)	.551 (14)	.394 (10)	10
50910 00 N04	50910N-5-M5	5	M5	.157 (4)	.787 (20)	1.161 (29.5)	.315 (8)	.492 (12.5)	10
50910 00 N05	50910N-5-1/8	5	1/8	.217 (5.5)	.846 (21.5)	1.220 (31)	.551 (14)	.492 (12.5)	10
50910 00 N06	50910N-5-1/4	5	1/4	.276 (7)	.965 (24.5)	1.437 (36.5)	.669 (17)	.492 (12.5)	10
50910 00 N07	50910N-6-M5	6	M5	.157 (4)	.807 (20.5)	1.161 (29.5)	.315 (8)	.492 (12.5)	10
50910 00 N08	50910N-6-1/8	6	1/8	.217 (5.5)	.886 (22.5)	1.220 (31)	.551 (14)	.492 (12.5)	10
50910 00 N09	50910N-6-1/4	6	1/4	.276 (7)	.984 (25)	1.437 (36.5)	.669 (17)	.492 (12.5)	10
50910 00 N10	50910N-8-1/8	5/16 (8)	1/8	.217 (5.5)	.945 (24)	1.220 (31)	.551 (14)	.551 (14)	10
50910 00 N11	50910N-8-1/4	5/16 (8)	1/4	.276 (7)	1.024 (26)	1.437 (36.5)	.669 (17)	.551 (14)	10
50910 00 N16	50910N-8-3/8	5/16 (8)	3/8	.295 (7.5)	1.122 (28.5)	1.673 (42.5)	.787 (20)	.551 (14)	10
50910 00 N17	50910N-10-1/4	10	1/4	.276 (7)	1.122 (28.5)	1.437 (36.5)	.669 (17)	.669 (17)	10
50910 00 N12	50910N-10-3/8	10	3/8	.295 (7.5)	1.201 (30.5)	1.673 (42.5)	.787 (20)	.669 (17)	10
50910 00 N13	50910N-12-3/8	12	3/8	.295 (7.5)	1.280 (32.5)	1.673 (42.5)	.787 (20)	.846 (21.5)	10
50910 00 N14	50910N-12-1/2	12	1/2	.354 (9)	1.378 (35)	1.850 (47)	.945 (24)	.846 (21.5)	10
50910 00 N15	50910N-14-1/2	14	1/2	.354 (9)	1.398 (35.5)	1.850 (47)	.945 (24)	.846 (21.5)	10

50920N

METRIC TUBE NEEDLE VALVE

SWIFTFIT Universal thread

B

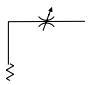



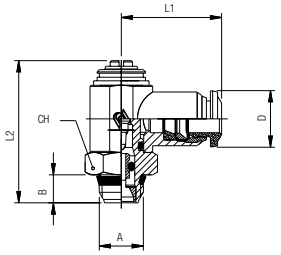

Code	Usa Ref	Tube	A	B	L1	L2	CH	D	Pack
50920 00 N01	50920N-3-M5	3	M5	.157 (4)	.748 (19)	1.161 (29.5)	.315 (8)	.394 (10)	10
50920 00 N02	50920N-4-M5	5/32 (4)	M5	.157 (4)	.748 (19)	1.161 (29.5)	.315 (8)	.394 (10)	10
50920 00 N03	50920N-4-1/8	5/32 (4)	1/8	.217 (5.5)	.827 (21)	1.220 (31)	.551 (14)	.394 (10)	10
50920 00 N04	50920N-5-M5	5	M5	.157 (4)	.787 (20)	1.161 (29.5)	.315 (8)	.492 (12.5)	10
50920 00 N05	50920N-5-1/8	5	1/8	.217 (5.5)	.846 (21.5)	1.220 (31)	.551 (14)	.492 (12.5)	10
50920 00 N06	50920N-5-1/4	5	1/4	.276 (7)	.965 (24.5)	1.437 (36.5)	.669 (17)	.492 (12.5)	10
50920 00 N07	50920N-6-M5	6	M5	.157 (4)	.807 (20.5)	1.161 (29.5)	.315 (8)	.492 (12.5)	10
50920 00 N08	50920N-6-1/8	6	1/8	.217 (5.5)	.886 (22.5)	1.220 (31)	.551 (14)	.492 (12.5)	10
50920 00 N09	50920N-6-1/4	6	1/4	.276 (7)	.984 (25)	1.437 (36.5)	.669 (17)	.492 (12.5)	10
50920 00 N10	50920N-8-1/8	5/16 (8)	1/8	.217 (5.5)	.945 (24)	1.220 (31)	.551 (14)	.551 (14)	10
50920 00 N11	50920N-8-1/4	5/16 (8)	1/4	.276 (7)	1.024 (26)	1.437 (36.5)	.669 (17)	.551 (14)	10
50920 00 N16	50920N-8-3/8	5/16 (8)	3/8	.295 (7.5)	1.122 (28.5)	1.673 (42.5)	.787 (20)	.551 (14)	10
50920 00 N17	50920N-10-1/4	10	1/4	.276 (7)	1.122 (28.5)	1.437 (36.5)	.669 (17)	.669 (17)	10
50920 00 N12	50920N-10-3/8	10	3/8	.295 (7.5)	1.201 (30.5)	1.673 (42.5)	.787 (20)	.669 (17)	10
50920 00 N13	50920N-12-3/8	12	3/8	.295 (7.5)	1.280 (32.5)	1.673 (42.5)	.787 (20)	.846 (21.5)	10
50920 00 N14	50920N-12-1/2	12	1/2	.354 (9)	1.378 (35)	1.850 (47)	.945 (24)	.846 (21.5)	10
50920 00 N15	50920N-14-1/2	14	1/2	.354 (9)	1.398 (35.5)	1.850 (47)	.945 (24)	.846 (21.5)	10

50905N

METRIC TUBE FLOW CONTROL (OUT)

SWIFTFIT Universal thread

C

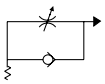



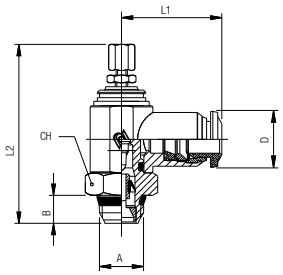

Code	Usa Ref	Tube	A	B	L1	L2 min	L2 max	CH	D	Pack
50905 00 N01	50905N-3-M5	3	M5	.157 (4)	.748 (19)	1.516 (38.5)	1.673 (42.5)	.315 (8)	.394 (10)	10
50905 00 N02	50905N-4-M5	5/32 (4)	M5	.157 (4)	.748 (19)	1.516 (38.5)	1.673 (42.5)	.315 (8)	.394 (10)	10
50905 00 N03	50905N-4-1/8	5/32 (4)	1/8	.217 (5.5)	.827 (21)	1.732 (44)	1.929 (49)	.551 (14)	.394 (10)	10
50905 00 N04	50905N-5-M5	5	M5	.157 (4)	.787 (20)	1.516 (38.5)	1.673 (42.5)	.315 (8)	.492 (12.5)	10
50905 00 N05	50905N-5-1/8	5	1/8	.217 (5.5)	.846 (21.5)	1.732 (44)	1.929 (49)	.551 (14)	.492 (12.5)	10
50905 00 N06	50905N-5-1/4	5	1/4	.276 (7)	.965 (24.5)	1.909 (48.5)	2.165 (55)	.669 (17)	.492 (12.5)	10
50905 00 N07	50905N-6-M5	6	M5	.157 (4)	.807 (20.5)	1.516 (38.5)	1.673 (42.5)	.315 (8)	.492 (12.5)	10
50905 00 N08	50905N-6-1/8	6	1/8	.217 (5.5)	.886 (22.5)	1.732 (44)	1.929 (49)	.551 (14)	.492 (12.5)	10
50905 00 N09	50905N-6-1/4	6	1/4	.276 (7)	.984 (25)	1.909 (48.5)	2.165 (55)	.669 (17)	.492 (12.5)	10
50905 00 N10	50905N-8-1/8	5/16 (8)	1/8	.217 (5.5)	.945 (24)	1.732 (44)	1.929 (49)	.551 (14)	.551 (14)	10
50905 00 N11	50905N-8-1/4	5/16 (8)	1/4	.276 (7)	1.024 (26)	1.909 (48.5)	2.165 (55)	.669 (17)	.551 (14)	10
50905 00 N16	50905N-8-3/8	5/16 (8)	3/8	.295 (7.5)	1.122 (28.5)	2.205 (56)	2.559 (65)	.787 (20)	.551 (14)	10
50905 00 N17	50905N-10-1/4	10	1/4	.276 (7)	1.122 (28.5)	1.909 (48.5)	2.165 (55)	.669 (17)	.669 (17)	10
50905 00 N12	50905N-10-3/8	10	3/8	.295 (7.5)	1.201 (30.5)	2.205 (56)	2.559 (65)	.787 (20)	.669 (17)	10
50905 00 N13	50905N-12-3/8	12	3/8	.295 (7.5)	1.280 (32.5)	2.205 (56)	2.559 (65)	.787 (20)	.846 (21.5)	10
50905 00 N14	50905N-12-1/2	12	1/2	.354 (9)	1.378 (35)	2.441 (62)	2.717 (69)	.945 (24)	.846 (21.5)	10
50905 00 N15	50905N-14-1/2	14	1/2	.354 (9)	1.398 (35.5)	2.441 (62)	2.717 (69)	.945 (24)	.846 (21.5)	10

50915N

METRIC TUBE FLOW CONTROL (IN)

SWIFTFIT Universal thread

V

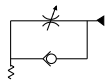



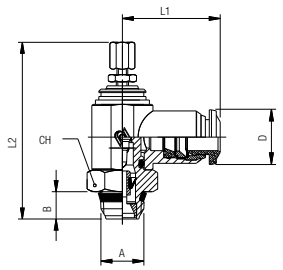

Code	Usa Ref	Tube	A	B	L1	L2 min	L2 max	CH	D	Pack
50915 00 N01	50915N-3-M5	3	M5	.157 (4)	.748 (19)	1.516 (38.5)	1.673 (42.5)	.315 (8)	.394 (10)	10
50915 00 N02	50915N-4-M5	5/32 (4)	M5	.157 (4)	.748 (19)	1.516 (38.5)	1.673 (42.5)	.315 (8)	.394 (10)	10
50915 00 N03	50915N-4-1/8	5/32 (4)	1/8	.217 (5.5)	.827 (21)	1.732 (44)	1.929 (49)	.551 (14)	.394 (10)	10
50915 00 N04	50915N-5-M5	5	M5	.157 (4)	.787 (20)	1.516 (38.5)	1.673 (42.5)	.315 (8)	.492 (12.5)	10
50915 00 N05	50915N-5-1/8	5	1/8	.217 (5.5)	.846 (21.5)	1.732 (44)	1.929 (49)	.551 (14)	.492 (12.5)	10
50915 00 N06	50915N-5-1/4	5	1/4	.276 (7)	.965 (24.5)	1.909 (48.5)	2.165 (55)	.669 (17)	.492 (12.5)	10
50915 00 N07	50915N-6-M5	6	M5	.157 (4)	.807 (20.5)	1.516 (38.5)	1.673 (42.5)	.315 (8)	.492 (12.5)	10
50915 00 N08	50915N-6-1/8	6	1/8	.217 (5.5)	.886 (22.5)	1.732 (44)	1.929 (49)	.551 (14)	.492 (12.5)	10
50915 00 N09	50915N-6-1/4	6	1/4	.276 (7)	.984 (25)	1.909 (48.5)	2.165 (55)	.669 (17)	.492 (12.5)	10
50915 00 N10	50915N-8-1/8	5/16 (8)	1/8	.217 (5.5)	.945 (24)	1.732 (44)	1.929 (49)	.551 (14)	.551 (14)	10
50915 00 N11	50915N-8-1/4	5/16 (8)	1/4	.276 (7)	1.024 (26)	1.909 (48.5)	2.165 (55)	.669 (17)	.551 (14)	10
50915 00 N16	50915N-8-3/8	5/16 (8)	3/8	.295 (7.5)	1.122 (28.5)	2.205 (56)	2.559 (65)	.787 (20)	.551 (14)	10
50915 00 N17	50915N-10-1/4	10	1/4	.276 (7)	1.122 (28.5)	1.909 (48.5)	2.165 (55)	.669 (17)	.669 (17)	10
50915 00 N12	50915N-10-3/8	10	3/8	.295 (7.5)	1.201 (30.5)	2.205 (56)	2.559 (65)	.787 (20)	.669 (17)	10
50915 00 N13	50915N-12-3/8	12	3/8	.295 (7.5)	1.280 (32.5)	2.205 (56)	2.559 (65)	.787 (20)	.846 (21.5)	10
50915 00 N14	50915N-12-1/2	12	1/2	.354 (9)	1.378 (35)	2.441 (62)	2.717 (69)	.945 (24)	.846 (21.5)	10
50915 00 N15	50915N-14-1/2	14	1/2	.354 (9)	1.398 (35.5)	2.441 (62)	2.717 (69)	.945 (24)	.846 (21.5)	10

50925N

METRIC TUBE NEEDLE VALVE

SWIFTFIT Universal thread

B





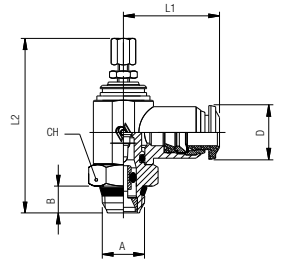

Code	Usa Ref	Tube	A	B	L1	L2 min	L2 max	CH	D	Pack
50925 00 N01	50925N-3-M5	3	M5	.157 (4)	.748 (19)	1.516 (38.5)	1.673 (42.5)	.315 (8)	.394 (10)	10
50925 00 N02	50925N-4-M5	5/32 (4)	M5	.157 (4)	.748 (19)	1.516 (38.5)	1.673 (42.5)	.315 (8)	.394 (10)	10
50925 00 N03	50925N-4-1/8	5/32 (4)	1/8	.217 (5.5)	.827 (21)	1.732 (44)	1.929 (49)	.551 (14)	.394 (10)	10
50925 00 N04	50925N-5-M5	5	M5	.157 (4)	.787 (20)	1.516 (38.5)	1.673 (42.5)	.315 (8)	.492 (12.5)	10
50925 00 N05	50925N-5-1/8	5	1/8	.217 (5.5)	.846 (21.5)	1.732 (44)	1.929 (49)	.551 (14)	.492 (12.5)	10
50925 00 N06	50925N-5-1/4	5	1/4	.276 (7)	.965 (24.5)	1.909 (48.5)	2.165 (55)	.669 (17)	.492 (12.5)	10
50925 00 N07	50925N-6-M5	6	M5	.157 (4)	.807 (20.5)	1.516 (38.5)	1.673 (42.5)	.315 (8)	.492 (12.5)	10
50925 00 N08	50925N-6-1/8	6	1/8	.217 (5.5)	.886 (22.5)	1.732 (44)	1.929 (49)	.551 (14)	.492 (12.5)	10
50925 00 N09	50925N-6-1/4	6	1/4	.276 (7)	.984 (25)	1.909 (48.5)	2.165 (55)	.669 (17)	.492 (12.5)	10
50925 00 N10	50925N-8-1/8	5/16 (8)	1/8	.217 (5.5)	.945 (24)	1.732 (44)	1.929 (49)	.551 (14)	.551 (14)	10
50925 00 N11	50925N-8-1/4	5/16 (8)	1/4	.276 (7)	1.024 (26)	1.909 (48.5)	2.165 (55)	.669 (17)	.551 (14)	10
50925 00 N16	50925N-8-3/8	5/16 (8)	3/8	.295 (7.5)	1.122 (28.5)	2.205 (56)	2.559 (65)	.787 (20)	.551 (14)	10
50925 00 N17	50925N-10-1/4	10	1/4	.276 (7)	1.122 (28.5)	1.909 (48.5)	2.165 (55)	.669 (17)	.669 (17)	10
50925 00 N12	50925N-10-3/8	10	3/8	.295 (7.5)	1.201 (30.5)	2.205 (56)	2.559 (65)	.787 (20)	.669 (17)	10
50925 00 N13	50925N-12-3/8	12	3/8	.295 (7.5)	1.280 (32.5)	2.205 (56)	2.559 (65)	.787 (20)	.846 (21.5)	10
50925 00 N14	50925N-12-1/2	12	1/2	.354 (9)	1.378 (35)	2.441 (62)	2.717 (69)	.945 (24)	.846 (21.5)	10
50925 00 N15	50925N-14-1/2	14	1/2	.354 (9)	1.398 (35.5)	2.441 (62)	2.717 (69)	.945 (24)	.846 (21.5)	10

55900

METRIC TUBE FLOW CONTROL (OUT)

SWIFTFIT Universal thread

C

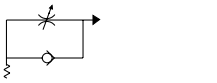



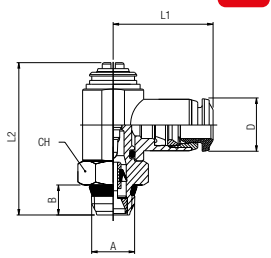

Code	Usa Ref	Tube	A	B	L1	L2	CH	D	Pack
55900 00 002	55901-4-M5	5/32 (4)	M5	.217 (5.5)	.768 (19.5)	1.161 (29.5)	.315 (8)	.394 (10)	10
55900 00 003	55901-4-1/8	5/32 (4)	1/8	.217 (5.5)	.846 (21.5)	1.220 (31)	.551 (14)	.394 (10)	10
55900 00 004	55901-5-M5	5	M5	.217 (5.5)	.807 (20.5)	1.161 (29.5)	.315 (8)	.492 (12.5)	10
55900 00 005	55901-5-1/8	5	1/8	.217 (5.5)	.886 (22.5)	1.220 (31)	.551 (14)	.492 (12.5)	10
55900 00 006	55901-5-1/4	5	1/4	.276 (7)	.984 (25)	1.437 (36.5)	.669 (17)	.492 (12.5)	10
55900 00 007	55901-6-M5	6	M5	.217 (5.5)	.827 (21)	1.161 (29.5)	.315 (8)	.492 (12.5)	10
55900 00 008	55901-6-1/8	6	1/8	.217 (5.5)	.906 (23)	1.220 (31)	.551 (14)	.492 (12.5)	10
55900 00 009	55901-6-1/4	6	1/4	.276 (7)	1.004 (25.5)	1.437 (36.5)	.669 (17)	.492 (12.5)	10
55900 00 010	55901-8-1/8	5/16 (8)	1/8	.217 (5.5)	.925 (23.5)	1.220 (31)	.551 (14)	.551 (14)	10
55900 00 011	55901-8-1/4	5/16 (8)	1/4	.276 (7)	1.024 (26)	1.437 (36.5)	.669 (17)	.551 (14)	10
55900 00 012	55901-8-3/8	5/16 (8)	3/8	.335 (8.5)	1.083 (27.5)	1.673 (42.5)	.787 (20)	.551 (14)	10
55900 00 013	55901-10-3/8	10	3/8	.335 (8.5)	1.201 (30.5)	1.673 (42.5)	.787 (20)	.669 (17)	10
55900 00 014	55901-12-3/8	12	3/8	.335 (8.5)	1.280 (32.5)	1.673 (42.5)	.787 (20)	.846 (21.5)	10
55900 00 015	55901-12-1/2	12	1/2	.394 (10)	1.378 (35)	1.850 (47)	.945 (24)	.846 (21.5)	10

55910

METRIC TUBE FLOW CONTROL (IN)

SWIFTFIT Universal thread

V

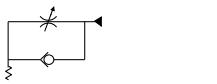



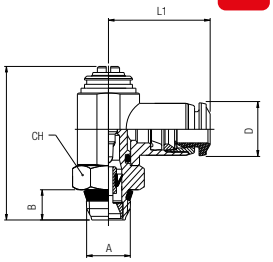

Code	Usa Ref	Tube	A	B	L1	L2	CH	D	Pack
55910 00 002	55910-4-M5	5/32 (4)	M5	.217 (5.5)	.768 (19.5)	1.161 (29.5)	.315 (8)	.394 (10)	10
55910 00 003	55910-4-1/8	5/32 (4)	1/8	.217 (5.5)	.846 (21.5)	1.220 (31)	.551 (14)	.394 (10)	10
55910 00 004	55910-5-M5	5	M5	.217 (5.5)	.807 (20.5)	1.161 (29.5)	.315 (8)	.492 (12.5)	10
55910 00 005	55910-5-1/8	5	1/8	.217 (5.5)	.886 (22.5)	1.220 (31)	.551 (14)	.492 (12.5)	10
55910 00 006	55910-5-1/4	5	1/4	.276 (7)	.984 (25)	1.437 (36.5)	.669 (17)	.492 (12.5)	10
55910 00 007	55910-6-M5	6	M5	.217 (5.5)	.827 (21)	1.161 (29.5)	.315 (8)	.492 (12.5)	10
55910 00 008	55910-6-1/8	6	1/8	.217 (5.5)	.906 (23)	1.220 (31)	.551 (14)	.492 (12.5)	10
55910 00 009	55910-6-1/4	6	1/4	.276 (7)	1.004 (25.5)	1.437 (36.5)	.669 (17)	.492 (12.5)	10
55910 00 010	55910-8-1/8	5/16 (8)	1/8	.217 (5.5)	.925 (23.5)	1.220 (31)	.551 (14)	.551 (14)	10
55910 00 011	55910-8-1/4	5/16 (8)	1/4	.276 (7)	1.024 (26)	1.437 (36.5)	.669 (17)	.551 (14)	10
55910 00 012	55910-8-3/8	5/16 (8)	3/8	.335 (8.5)	1.083 (27.5)	1.673 (42.5)	.787 (20)	.551 (14)	10
55910 00 013	55910-10-3/8	10	3/8	.335 (8.5)	1.201 (30.5)	1.673 (42.5)	.787 (20)	.669 (17)	10
55910 00 014	55910-12-3/8	12	3/8	.335 (8.5)	1.280 (32.5)	1.673 (42.5)	.787 (20)	.846 (21.5)	10
55910 00 015	55910-12-1/2	12	1/2	.394 (10)	1.378 (35)	1.850 (47)	.945 (24)	.846 (21.5)	10

55920

METRIC TUBE NEEDLE VALVE

SWIFTFIT Universal thread

B





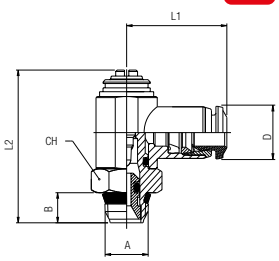

Code	Usa Ref	Tube	A	B	L1	L2	CH	D	Pack
55920 00 002	55920-4-M5	5/32 (4)	M5	.217 (5.5)	.768 (19.5)	1.161 (29.5)	.315 (8)	.394 (10)	10
55920 00 003	55920-4-1/8	5/32 (4)	1/8	.217 (5.5)	.846 (21.5)	1.220 (31)	.551 (14)	.394 (10)	10
55920 00 004	55920-5-M5	5	M5	.217 (5.5)	.807 (20.5)	1.161 (29.5)	.315 (8)	.492 (12.5)	10
55920 00 005	55920-5-1/8	5	1/8	.217 (5.5)	.886 (22.5)	1.220 (31)	.551 (14)	.492 (12.5)	10
55920 00 006	55920-5-1/4	5	1/4	.276 (7)	.984 (25)	1.437 (36.5)	.669 (17)	.492 (12.5)	10
55920 00 007	55920-6-M5	6	M5	.217 (5.5)	.827 (21)	1.161 (29.5)	.315 (8)	.492 (12.5)	10
55920 00 008	55920-6-1/8	6	1/8	.217 (5.5)	.906 (23)	1.220 (31)	.551 (14)	.492 (12.5)	10
55920 00 009	55920-6-1/4	6	1/4	.276 (7)	1.004 (25.5)	1.437 (36.5)	.669 (17)	.492 (12.5)	10
55920 00 010	55920-8-1/8	5/16 (8)	1/8	.217 (5.5)	.925 (23.5)	1.220 (31)	.551 (14)	.551 (14)	10
55920 00 011	55920-8-1/4	5/16 (8)	1/4	.276 (7)	1.024 (26)	1.437 (36.5)	.669 (17)	.551 (14)	10
55920 00 012	55920-8-3/8	5/16 (8)	3/8	.335 (8.5)	1.083 (27.5)	1.673 (42.5)	.787 (20)	.551 (14)	10
55920 00 013	55920-10-3/8	10	3/8	.335 (8.5)	1.201 (30.5)	1.673 (42.5)	.787 (20)	.669 (17)	10
55920 00 014	55920-12-3/8	12	3/8	.335 (8.5)	1.280 (32.5)	1.673 (42.5)	.787 (20)	.846 (21.5)	10
55920 00 015	55920-12-1/2	12	1/2	.394 (10)	1.378 (35)	1.850 (47)	.945 (24)	.846 (21.5)	10

55905

SWIFTFIT Universal thread

METRIC TUBE FLOW CONTROL (OUT)

C

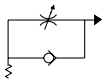



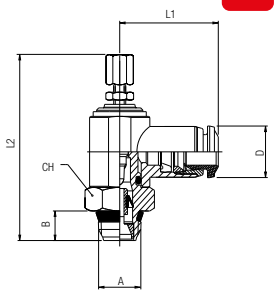

Code	Usa Ref	Tube	A	B	L1	L2 min	L2 max	CH	D	Pack
55905 00 002	55905-4-M5	5/32 (4)	M5	.217 (5.5)	.768 (19.5)	1.516 (38.5)	1.673 (42.5)	.315 (8)	.394 (10)	10
55905 00 003	55905-4-1/8	5/32 (4)	1/8	.217 (5.5)	.846 (21.5)	1.732 (44)	1.929 (49)	.551 (14)	.394 (10)	10
55905 00 004	55905-5-M5	5	M5	.217 (5.5)	.807 (20.5)	1.516 (38.5)	1.673 (42.5)	.315 (8)	.492 (12.5)	10
55905 00 005	55905-5-1/8	5	1/8	.217 (5.5)	.886 (22.5)	1.732 (44)	1.929 (49)	.551 (14)	.492 (12.5)	10
55905 00 006	55905-5-1/4	5	1/4	.276 (7)	.984 (25)	1.909 (48.5)	2.165 (55)	.669 (17)	.492 (12.5)	10
55905 00 007	55905-6-M5	6	M5	.217 (5.5)	.827 (21)	1.516 (38.5)	1.673 (42.5)	.315 (8)	.492 (12.5)	10
55905 00 008	55905-6-1/8	6	1/8	.217 (5.5)	.906 (23)	1.732 (44)	1.929 (49)	.551 (14)	.492 (12.5)	10
55905 00 009	55905-6-1/4	6	1/4	.276 (7)	1.004 (25.5)	1.909 (48.5)	2.165 (55)	.669 (17)	.492 (12.5)	10
55905 00 010	55905-8-1/8	5/16 (8)	1/8	.217 (5.5)	.925 (23.5)	1.732 (44)	1.929 (49)	.551 (14)	.551 (14)	10
55905 00 011	55905-8-1/4	5/16 (8)	1/4	.276 (7)	1.024 (26)	1.909 (48.5)	2.165 (55)	.669 (17)	.551 (14)	10
55905 00 012	55905-8-3/8	5/16 (8)	3/8	.335 (8.5)	1.083 (27.5)	2.205 (56)	2.559 (65)	.787 (20)	.551 (14)	10
55905 00 013	55905-10-3/8	10	3/8	.335 (8.5)	1.201 (30.5)	2.205 (56)	2.559 (65)	.787 (20)	.669 (17)	10
55905 00 014	55905-12-3/8	12	3/8	.335 (8.5)	1.280 (32.5)	2.205 (56)	2.559 (65)	.787 (20)	.846 (21.5)	10
55905 00 015	55905-12-1/2	12	1/2	.394 (10)	1.378 (35)	2.441 (62)	2.717 (69)	.945 (24)	.846 (21.5)	10

55915

SWIFTFIT Universal thread

METRIC TUBE FLOW CONTROL (IN)

V

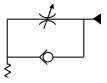



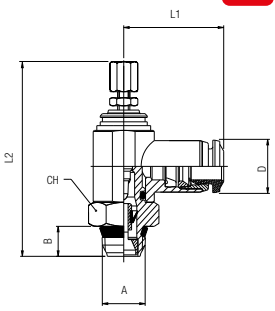

Code	Usa Ref	Tube	A	B	L1	L2 min	L2 max	CH	D	Pack
55915 00 002	55915-4-M5	5/32 (4)	M5	.217 (5.5)	.768 (19.5)	1.516 (38.5)	1.673 (42.5)	.315 (8)	.394 (10)	10
55915 00 003	55915-4-1/8	5/32 (4)	1/8	.217 (5.5)	.846 (21.5)	1.732 (44)	1.929 (49)	.551 (14)	.394 (10)	10
55915 00 004	55915-5-M5	5	M5	.217 (5.5)	.807 (20.5)	1.516 (38.5)	1.673 (42.5)	.315 (8)	.492 (12.5)	10
55915 00 005	55915-5-1/8	5	1/8	.217 (5.5)	.886 (22.5)	1.732 (44)	1.929 (49)	.551 (14)	.492 (12.5)	10
55915 00 006	55915-5-1/4	5	1/4	.276 (7)	.984 (25)	1.909 (48.5)	2.165 (55)	.669 (17)	.492 (12.5)	10
55915 00 007	55915-6-M5	6	M5	.217 (5.5)	.827 (21)	1.516 (38.5)	1.673 (42.5)	.315 (8)	.492 (12.5)	10
55915 00 008	55915-6-1/8	6	1/8	.217 (5.5)	.906 (23)	1.732 (44)	1.929 (49)	.551 (14)	.492 (12.5)	10
55915 00 009	55915-6-1/4	6	1/4	.276 (7)	1.004 (25.5)	1.909 (48.5)	2.165 (55)	.669 (17)	.492 (12.5)	10
55915 00 010	55915-8-1/8	5/16 (8)	1/8	.217 (5.5)	.925 (23.5)	1.732 (44)	1.929 (49)	.551 (14)	.551 (14)	10
55915 00 011	55915-8-1/4	5/16 (8)	1/4	.276 (7)	1.024 (26)	1.909 (48.5)	2.165 (55)	.669 (17)	.551 (14)	10
55915 00 012	55915-8-3/8	5/16 (8)	3/8	.335 (8.5)	1.083 (27.5)	2.205 (56)	2.559 (65)	.787 (20)	.551 (14)	10
55915 00 013	55915-10-3/8	10	3/8	.335 (8.5)	1.201 (30.5)	2.205 (56)	2.559 (65)	.787 (20)	.669 (17)	10
55915 00 014	55915-12-3/8	12	3/8	.335 (8.5)	1.280 (32.5)	2.205 (56)	2.559 (65)	.787 (20)	.846 (21.5)	10
55915 00 015	55915-12-1/2	12	1/2	.394 (10)	1.378 (35)	2.441 (62)	2.717 (69)	.945 (24)	.846 (21.5)	10

55925

SWIFTFIT Universal thread

METRIC TUBE NEEDLE VALVE

B





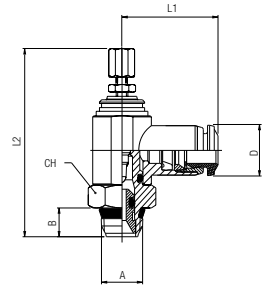

Code	Usa Ref	Tube	A	B	L1	L2 min	L2 max	CH	D	Pack
55925 00 002	55925-4-M5	5/32 (4)	M5	.217 (5.5)	.768 (19.5)	1.516 (38.5)	1.673 (42.5)	.315 (8)	.394 (10)	10
55925 00 003	55925-4-1/8	5/32 (4)	1/8	.217 (5.5)	.846 (21.5)	1.732 (44)	1.929 (49)	.551 (14)	.394 (10)	10
55925 00 004	55925-5-M5	5	M5	.217 (5.5)	.807 (20.5)	1.516 (38.5)	1.673 (42.5)	.315 (8)	.492 (12.5)	10
55925 00 005	55925-5-1/8	5	1/8	.217 (5.5)	.886 (22.5)	1.732 (44)	1.929 (49)	.551 (14)	.492 (12.5)	10
55925 00 006	55925-5-1/4	5	1/4	.276 (7)	.984 (25)	1.909 (48.5)	2.165 (55)	.669 (17)	.492 (12.5)	10
55925 00 007	55925-6-M5	6	M5	.217 (5.5)	.827 (21)	1.516 (38.5)	1.673 (42.5)	.315 (8)	.492 (12.5)	10
55925 00 008	55925-6-1/8	6	1/8	.217 (5.5)	.906 (23)	1.732 (44)	1.929 (49)	.551 (14)	.492 (12.5)	10
55925 00 009	55925-6-1/4	6	1/4	.276 (7)	1.004 (25.5)	1.909 (48.5)	2.165 (55)	.669 (17)	.492 (12.5)	10
55925 00 010	55925-8-1/8	5/16 (8)	1/8	.217 (5.5)	.925 (23.5)	1.732 (44)	1.929 (49)	.551 (14)	.551 (14)	10
55925 00 011	55925-8-1/4	5/16 (8)	1/4	.276 (7)	1.024 (26)	1.909 (48.5)	2.165 (55)	.669 (17)	.551 (14)	10
55925 00 012	55925-8-3/8	5/16 (8)	3/8	.335 (8.5)	1.083 (27.5)	2.205 (56)	2.559 (65)	.787 (20)	.551 (14)	10
55925 00 013	55925-10-3/8	10	3/8	.335 (8.5)	1.201 (30.5)	2.205 (56)	2.559 (65)	.787 (20)	.669 (17)	10
55925 00 014	55925-12-3/8	12	3/8	.335 (8.5)	1.280 (32.5)	2.205 (56)	2.559 (65)	.787 (20)	.846 (21.5)	10
55925 00 015	55925-12-1/2	12	1/2	.394 (10)	1.378 (35)	2.441 (62)	2.717 (69)	.945 (24)	.846 (21.5)	10

82815

INLINE FLOW CONTROL



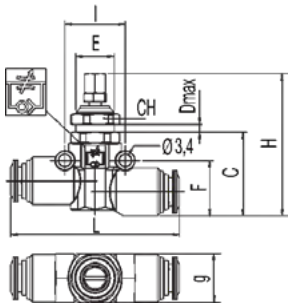

Code	Usa Ref	Tube	C	D	E	F	G	H min	H max	I	L	CH	Pack
82815 00 003	82815-04	1/4	.925 (23.5)	.157 (4)	M11X1	.610 (15.5)	.551 (14)	1.594 (40.5)	1.831 (46.5)	.669 (17)	1.890 (48)	.512 (13)	10
82815 00 004	82815-06	3/8	1.004 (25.5)	.177 (4.5)	M16X1	.807 (20.5)	.807 (20.5)	1.929 (49)	2.165 (55)	.787 (20)	2.264 (57.5)	.709 (18)	10

82820

INLINE FLOW CONTROL MALE X TUBE



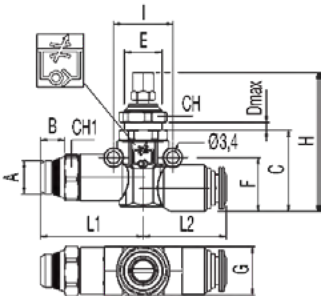

Code	Usa Ref	A	Tube	B	C	D	E	F	G	H min	H max	I	L1	L2	CH	CH1	Pack
82820 00 006	82820-04-06	1/4	3/8	.276 (7)	1.004 (25.5)	.177 (4.5)	M16X1	.807 (20.5)	.807 (20.5)	1.929 (49)	2.165 (55)	.787 (20)	1.378 (35)	1.142 (29)	.709 (18)	.512 (13)	10
82820 00 007	82820-06-06	3/8	3/8	.295 (7.5)	1.004 (25.5)	.177 (4.5)	M16X1	.807 (20.5)	.807 (20.5)	1.929 (49)	2.165 (55)	.787 (20)	1.398 (35.5)	1.142 (29)	.709 (18)	.669 (17)	10

82830

INLINE TUBE NEEDLE VALVE



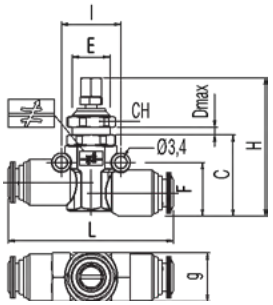

Code	Usa Ref	Tube	C	D	E	F	G	H min	H max	I	L	CH	Pack
82830 00 003	82830-04	1/4	.925 (23.5)	.157 (4)	M11X1	.610 (15.5)	.551 (14)	1.594 (40.5)	1.831 (46.5)	.669 (17)	1.890 (48)	.512 (13)	10
82830 00 004	82830-06	3/8	1.004 (25.5)	.177 (4.5)	M16X1	.807 (20.5)	.807 (20.5)	1.929 (49)	2.165 (55)	.787 (20)	2.264 (57.5)	.709 (18)	10

82835

INLINE NEEDLE VALVE MALE X TUBE



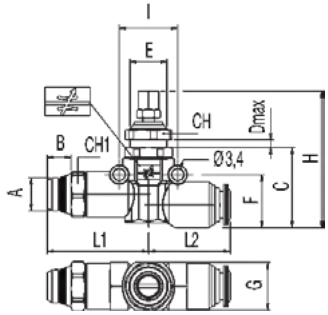

Code	Usa Ref	A	Tube	B	C	D	E	F	G	H min	H max	I	L1	L2	CH	CH1	Pack
82835 00 003	82835-04-04	1/4	1/4	.276 (7)	.925 (23.5)	.157 (4)	M11X1	.610 (15.5)	.551 (14)	1.594 (40.5)	1.831 (46.5)	.669 (17)	1.161 (29.5)	.945 (24)	.512 (13)	.512 (13)	10
82835 00 007	82835-06-06	3/8	3/8	.295 (7.5)	1.004 (25.5)	.177 (4.5)	M16X1	.807 (20.5)	.807 (20.5)	1.929 (49)	2.165 (55)	.787 (20)	1.398 (35.5)	1.142 (29)	.709 (18)	.669 (17)	10

85940

TUBE IN-LINE NEEDLE VALVE (UNIDIRECTIONAL FLOW)



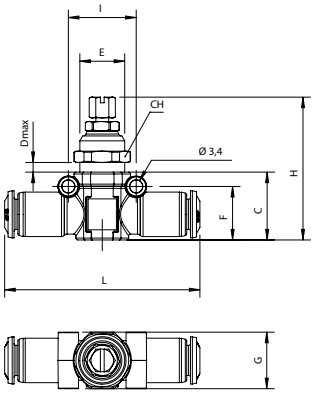

Code	Usa Ref	Tube	C	D	E	F	G	H	I	L	CH	Pack
85940 00 003	85940-53	5/32 (4)	.709 (18)	.157 (4)	M12x1	.571 (14.5)	.591 (15)	1.476 (37.5)÷1.713 (43.5)	.709 (18)	2.047 (52)	.551 (14)	10
85940 00 001	85940-04	1/4	.709 (18)	.236 (6)	M12x1	.571 (14.5)	.591 (15)	1.476 (37.5)÷1.713 (43.5)	.709 (18)	2.047 (52)	.551 (14)	10
85940 00 004	85940-05	5/16 (8)	.787 (20)	.256 (6.5)	M14x1	.650 (16.5)	.669 (17)	1.555 (39.5)÷1.791 (45.5)	.787 (20)	2.283 (58)	.630 (16)	10
85940 00 002	85940-06	3/8	.925 (23.5)	.315 (8)	M16x1	.768 (19.5)	.748 (19)	1.870 (47.5)÷2.106 (53.5)	.886 (22.5)	2.638 (67)	.709 (18)	10

85945

MALE "UNIVERSAL SHORT"-TUBE IN-LINE FLOW CONTROL (CONTROLLED FLOW OUT)



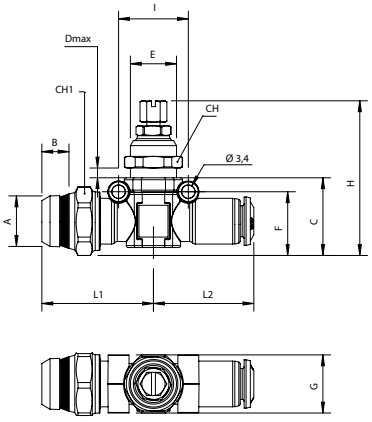

Code	Usa Ref	Tube	A	B	C	D	E	F	G	H	I	L1	L2	CH	CH1	Pack
85945 00 005	85945-53-02	5/32 (4)	1/8	.217 (5.5)	.787 (20)	.236 (6)	M12x1	.650 (16.5)	.591 (15)	1.555 (39.5)÷1.791 (45.5)	.709 (18)	1.122 (28.5)	1.024 (26)	.551 (14)	.630 (16)	10
85945 00 001	85945-04-02	1/4	1/8	.217 (5.5)	.787 (20)	.236 (6)	M12x1	.650 (16.5)	.591 (15)	1.555 (39.5)÷1.791 (45.5)	.709 (18)	1.122 (28.5)	1.024 (26)	.551 (14)	.630 (16)	10
85945 00 002	85945-04-04	1/4	1/4	.276 (7)	.787 (20)	.236 (6)	M12x1	.650 (16.5)	.591 (15)	1.555 (39.5)÷1.791 (45.5)	.709 (18)	1.122 (28.5)	1.024 (26)	.551 (14)	.630 (16)	10
85945 00 006	85945-05-04	5/16 (8)	1/4	.276 (7)	.906 (23)	.256 (6.5)	M14x1	.650 (16.5)	.669 (17)	1.673 (42.5)÷1.909 (48.5)	.787 (20)	1.319 (33.5)	1.142 (29)	.630 (16)	.787 (20)	10
85945 00 007	85945-05-06	5/16 (8)	3/8	.295 (7.5)	.906 (23)	.256 (6.5)	M14x1	.650 (16.5)	.669 (17)	1.673 (42.5)÷1.909 (48.5)	.787 (20)	1.319 (33.5)	1.142 (29)	.630 (16)	.787 (20)	10
85945 00 003	85945-06-06	3/8	3/8	.295 (7.5)	.965 (24.5)	.315 (8)	M16x1	.807 (20.5)	.748 (19)	1.673 (42.5)÷2.126 (54)	.886 (22.5)	1.358 (34.5)	1.319 (33.5)	.709 (18)	.787 (20)	10
85945 00 004	85945-06-08	3/8	1/2	.354 (9)	.984 (25)	.315 (8)	M16x1	.827 (21)	.748 (19)	1.673 (42.5)÷2.146 (54.5)	.886 (22.5)	1.358 (34.5)	1.319 (33.5)	.709 (18)	.827 (21)	10

85950

MALE "UNIVERSAL SHORT"- TUBE IN-LINE FLOW CONTROL (CONTROLLED FLOW IN)

SWIFTFIT Universal thread



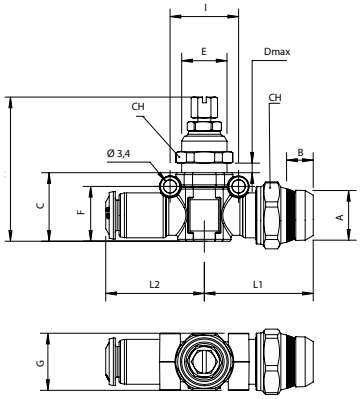

Code	Usa Ref	Tube	A	B	C	D	E	F	G	H	I	L1	L2	CH	CH1	Pack
85950 00 005	85950-53-02	5/32 (4)	1/8	.217 (5.5)	.787 (20)	.236 (6)	M12x1	.650 (16.5)	.591 (15)	1.555 (39.5)÷1.791 (45.5)	.709 (18)	1.142 (29)	1.024 (26)	.551 (14)	.630 (16)	10
85950 00 001	85950-04-02	1/4	1/8	.217 (5.5)	.787 (20)	.236 (6)	M12x1	.650 (16.5)	.591 (15)	1.555 (39.5)÷1.791 (45.5)	.709 (18)	1.142 (29)	1.024 (26)	.551 (14)	.630 (16)	10
85950 00 002	85950-04-04	1/4	1/4	.276 (7)	.787 (20)	.236 (6)	M12x1	.650 (16.5)	.591 (15)	1.555 (39.5)÷1.791 (45.5)	.709 (18)	1.142 (29)	1.024 (26)	.551 (14)	.630 (16)	10
85950 00 006	85950-05-04	5/16 (8)	1/4	.276 (7)	.906 (23)	.256 (6.5)	M14x1	.650 (16.5)	.669 (17)	1.673 (42.5)÷1.909 (48.5)	.787 (20)	1.319 (33.5)	1.142 (29)	.630 (16)	.787 (20)	10
85950 00 007	85950-05-06	5/16 (8)	3/8	.295 (7.5)	.906 (23)	.256 (6.5)	M14x1	.650 (16.5)	.669 (17)	1.673 (42.5)÷1.909 (48.5)	.787 (20)	1.319 (33.5)	1.142 (29)	.630 (16)	.787 (20)	10
85950 00 003	85950-06-06	3/8	3/8	.295 (7.5)	.965 (24.5)	.315 (8)	M16x1	.807 (20.5)	.748 (19)	1.673 (42.5)÷2.126 (54)	.886 (22.5)	1.358 (34.5)	1.319 (33.5)	.709 (18)	.787 (20)	10
85950 00 004	85950-06-08	3/8	1/2	.354 (9)	.984 (25)	.315 (8)	M16x1	.827 (21)	.748 (19)	1.673 (42.5)÷2.146 (54.5)	.886 (22.5)	1.358 (34.5)	1.319 (33.5)	.709 (18)	.827 (21)	10

85955

TUBE IN-LINE NEEDLE VALVE (BIDIRECTIONAL FLOW)



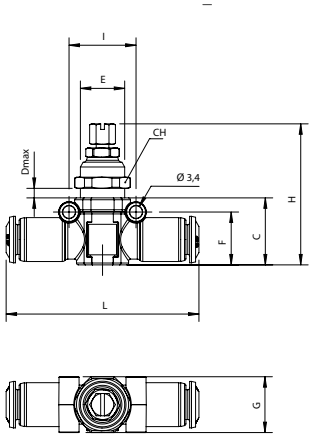

Code	Usa Ref	Tube	C	D	E	F	G	H	I	L	CH	Pack
85955 00 003	85955-53	5/32 (4)	.709 (18)	.236 (6)	M12x1	.571 (14.5)	.591 (15)	1.476 (37.5)÷1.713 (43.5)	.709 (18)	2.047 (52)	.551 (14)	10
85955 00 001	85955-04	1/4	.709 (18)	.236 (6)	M12x1	.571 (14.5)	.591 (15)	1.476 (37.5)÷1.713 (43.5)	.709 (18)	2.047 (52)	.551 (14)	10
85955 00 004	85955-05	5/16 (8)	.787 (20)	.256 (6.5)	M14x1	.650 (16.5)	.669 (17)	1.555 (39.5)÷1.791 (45.5)	.787 (20)	2.283 (58)	.630 (16)	10
85955 00 002	85955-06	3/8	.925 (23.5)	.315 (8)	M16x1	.768 (19.5)	.748 (19)	1.870 (47.5)÷2.106 (53.5)	.886 (22.5)	2.638 (67)	.709 (18)	10

85960

MALE "UNIVERSAL SHORT" - TUBE IN-LINE FLOW CONTROL (BIDIRECTIONAL FLOW)

SWIFTFIT Universal thread



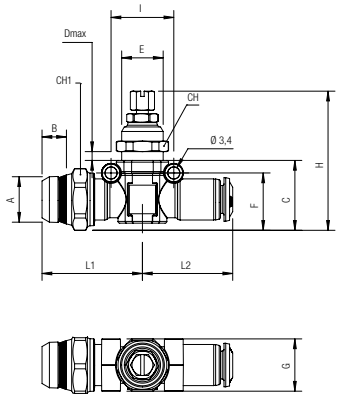

Code	Usa Ref	Tube	A	B	C	D	E	F	G	H	I	L1	L2	CH	CH1	Pack
85960 00 005	85960-53-02	**5/32 (4)**	**1/8**	.217 (5.5)	.787 (20)	.236 (6)	M12x1	.650 (16.5)	.591 (15)	1.555 (39.5)÷1.791 (45.5)	.709 (18)	1.122 (28.5)	1.024 (26)	.551 (14)	.630 (16)	10
85960 00 001	85960-04-02	**1/4**	**1/8**	.217 (5.5)	.787 (20)	.236 (6)	M12x1	.650 (16.5)	.591 (15)	1.555 (39.5)÷1.791 (45.5)	.709 (18)	1.122 (28.5)	1.024 (26)	.551 (14)	.630 (16)	10
85960 00 002	85960-04-04	**1/4**	**1/4**	.276 (7)	.787 (20)	.236 (6)	M12x1	.650 (16.5)	.591 (15)	1.555 (39.5)÷1.791 (45.5)	.709 (18)	1.122 (28.5)	1.024 (26)	.551 (14)	.630 (16)	10
85960 00 006	85960-05-04	**5/16 (8)**	**1/4**	.276 (7)	.906 (23)	.256 (6.5)	M14x1	.650 (16.5)	.669 (17)	1.673 (42.5)÷1.909 (48.5)	.787 (20)	1.319 (33.5)	1.142 (29)	.630 (16)	.787 (20)	10
85960 00 007	85960-05-06	**5/16 (8)**	**3/8**	.295 (7.5)	.906 (23)	.256 (6.5)	M14x1	.650 (16.5)	.669 (17)	1.673 (42.5)÷1.909 (48.5)	.787 (20)	1.319 (33.5)	1.142 (29)	.630 (16)	.787 (20)	10
85960 00 003	85960-06-06	**3/8**	**3/8**	.295 (7.5)	.965 (24.5)	.315 (8)	M16x1	.807 (20.5)	.748 (19)	1.673 (42.5)÷2.126 (54)	.886 (22.5)	1.358 (34.5)	1.319 (33.5)	.709 (18)	.787 (20)	10
85960 00 004	85960-06-08	**3/8**	**1/2**	.354 (9)	.984 (25)	.315 (8)	M16x1	.827 (21)	.748 (19)	1.673 (42.5)÷2.146 (54.5)	.886 (22.5)	1.358 (34.5)	1.319 (33.5)	.709 (18)	.827 (21)	10

FLOW REGULATORS

TECHNICAL CHARACTERISTICS

Reference Standard

1907/2006 REACH
2011/65/CE
PED 2014/68/UE
SILICON FREE

Pressure Rating

Vacuum ~ 145 psi
-0.99 bar ~ 10 bar
-0.099 MPa ~ 1.0 MPa

Temperature Rating

NBR	-4 °F ~ 176 °F
	-20 °C ~ 80 °C

UNI-DIRECTIONAL

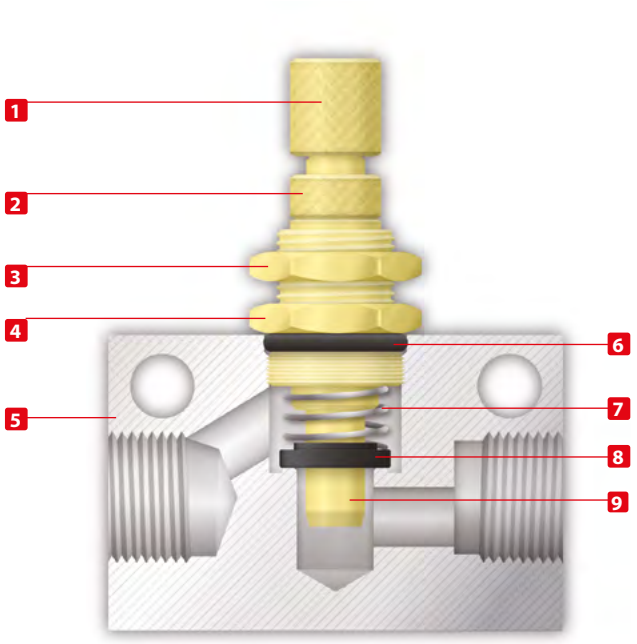

BI-DIRECTIONAL

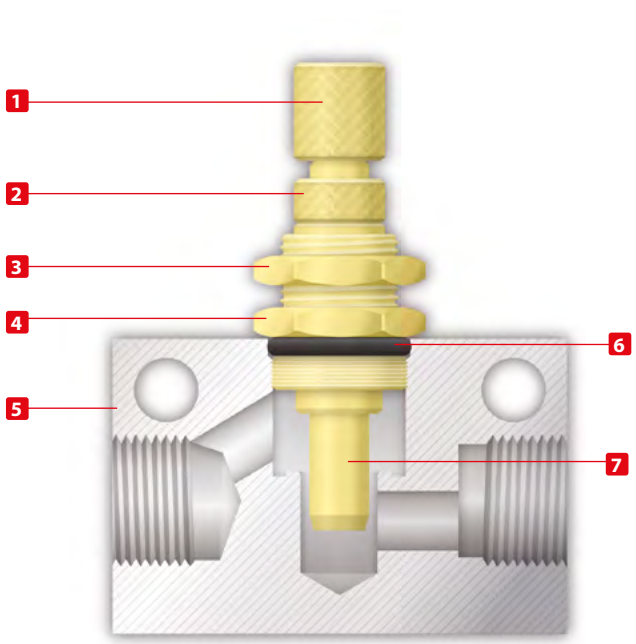

Component Parts and Materials

1 Brass adjusting knob
2 Brass nut
3 Brass locking nut
4 Brass nipple
5 Anodized aluminum body
6 NBR O-ring
7 Steel spring
8 Seal floating washer
9 Brass adjusting needle

Component Parts and Materials

1 Brass adjusting knob
2 Brass nut
3 Brass locking nut
4 Brass nipple
5 Anodized aluminum body
6 NBR O-ring
7 Brass adjusting needle

Flow Characteristics of Inline Flow Control Valves

Inlet Pressure
101 psi

Outlet Pressure: Atmospheric Pressure
14.7 psi

UNI-DIRECTIONAL

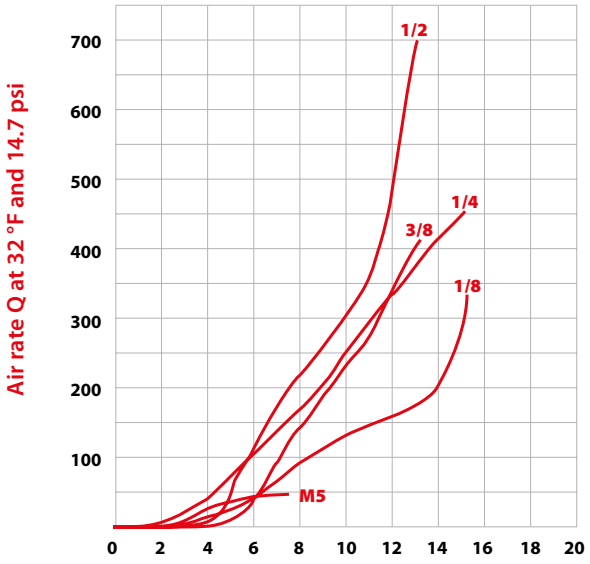

BI-DIRECTIONAL

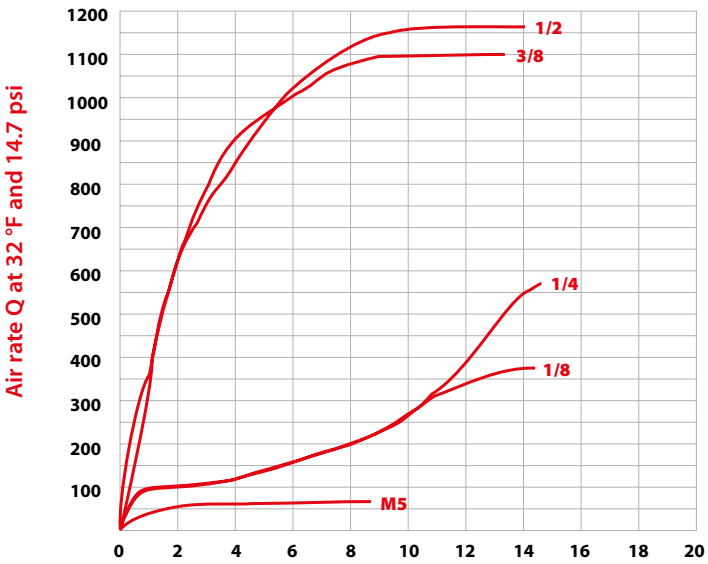

82850

UNI-DIRECTIONAL INLINE VALVE



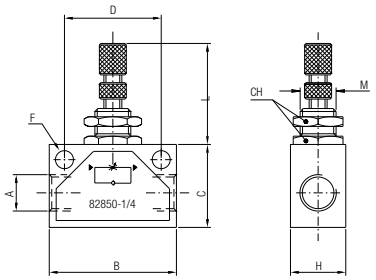

Code	Usa Ref	A NPTF	B	C	H	D	F	L min	L max	M	CH	Pack
82850 00 001	82850-02	1/8	1.378 (35)	.866 (22)	.709 (18)	.984 (25)	.177 (4.5)	1.024 (26)	1.417 (36)	M12x0.75	.591 (15)	10
82850 00 002	82850-04	1/4	1.811 (46)	1.181 (30)	.787 (20)	1.378 (35)	.256 (6.5)	1.024 (26)	1.417 (36)	M12x0.75	.591 (15)	10
82850 00 003	82850-06	3/8	1.969 (50)	1.181 (30)	.984 (25)	1.378 (35)	.256 (6.5)	1.260 (32)	1.654 (42)	M18x1.5	.866 (22)	10
82850 00 004	82850-08	1/2	2.362 (60)	1.575 (40)	.984 (25)	1.732 (44)	.256 (6.5)	1.260 (32)	1.732 (44)	M18x1.5	.866 (22)	10

82860

BI-DIRECTIONAL INLINE NEEDLE VALVE



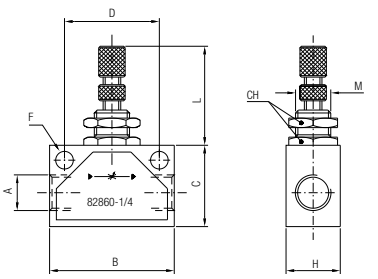

Code	Usa Ref	A NPTF	B	C	H	D	F	L min	L max	M	CH	Pack
82860 00 001	82860-02	1/8	1.378 (35)	.866 (22)	.709 (18)	.984 (25)	.177 (4.5)	1.024 (26)	1.417 (36)	M12x0.75	.591 (15)	10
82860 00 002	82860-04	1/4	1.811 (46)	1.181 (30)	.787 (20)	1.378 (35)	.256 (6.5)	1.024 (26)	1.417 (36)	M12x0.75	.591 (15)	10
82860 00 003	82860-06	3/8	1.969 (50)	1.181 (30)	.984 (25)	1.378 (35)	.256 (6.5)	1.260 (32)	1.654 (42)	M18x1.5	.866 (22)	10
82860 00 004	82860-08	1/2	2.362 (60)	1.575 (40)	.984 (25)	1.732 (44)	.256 (6.5)	1.260 (32)	1.732 (44)	M18x1.5	.866 (22)	10

QUICK EXHAUST VALVES

TECHNICAL CHARACTERISTICS

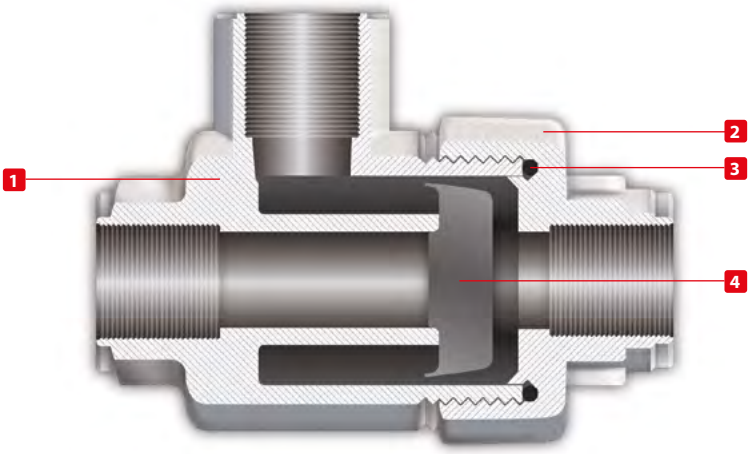

Component Parts and Materials

1 Nickel-plated brass body
2 Nylon cap seal
3 Nickel-plated brass cap
4 NBR piston

Pressure Rating

4.35 psi ~ 145 psi
0.3 bar ~ 10 bar
0.003 MPa ~ 1.0 MPa

Temperature Rating

-4 °F ~ 176 °F
-20 °C ~ 80 °C

Reference Standard

1907/2006 REACH
2011/65/CE RoHS
PED 2014/68/UE
SILICON FREE

According to the UNI standards ref. UNI- ISO 5598, this valve is considered: "Valve which immediately opens its outlet to exhaust, whenever the pressure of the air decreases at the inlet."

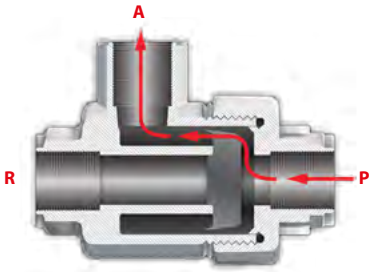

System pressure is applied to the inlet port (P), flow is directed to cylinder port (A).

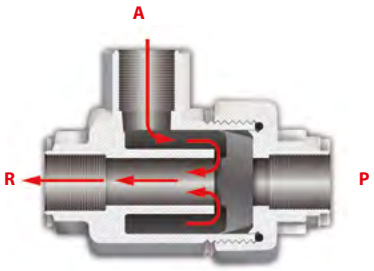

When system pressure (P) is dropped, exhaust air in the cylinder (A) is discharged directly from the exhaust port (R).

Threads

NPTF

Media

- Compressed air

WARNING!
This valve exhausts into atmosphere.
DO NOT use toxic, corrosive, or flammable media.

82650

QUICK EXHAUST VALVE



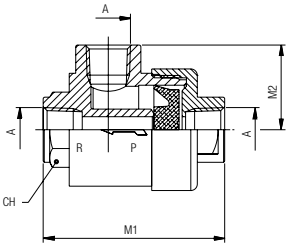

Code	Usa Ref	A NPTF	M1	M2	CH	Pack
82650 00 001	82650-02	1/8	1.457 (37)	.728 (18.5)	.551 (14)	10
82650 00 002	82650-04	1/4	1.799 (45.7)	.925 (23.5)	.669 (17)	10
82650 00 003	82650-06	3/8	2.382 (60.5)	1.043 (26.5)	.866 (22)	10
82650 00 004	82650-08	1/2	2.835 (72)	1.260 (32)	1.024 (26)	10
82650 00 005	82650-12	3/4	3.465 (88)	1.457 (37)	1.260 (32)	5
82650 00 006	82650-16	1	4.291 (109)	1.890 (48)	1.811 (46)	1

SLIDE VALVES

TECHNICAL CHARACTERISTICS

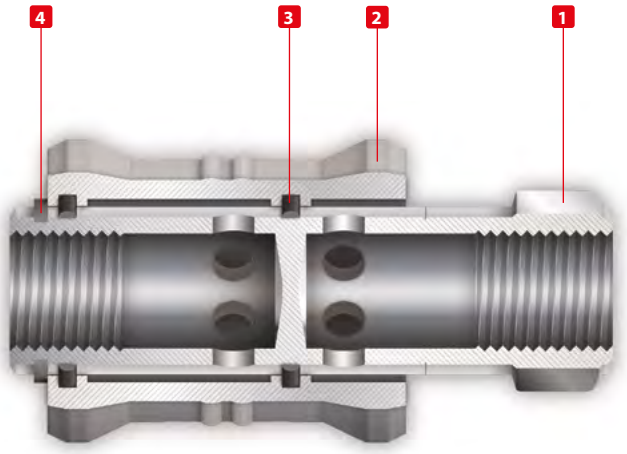

Reference Standard

1907/2006 REACH
2011/65/CE RoHS
PED 2014/68/UE
SILICON FREE

This Slide Valve can be considered a reversing ON-OFF valve. When in the closed position, it allows the used air to exit to the atmosphere.

ON

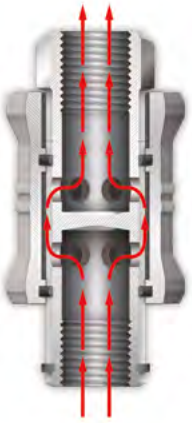

In the On position, the air coming from the air source passes through the holes on the stem of the valve.

OFF

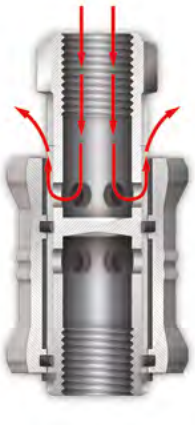

In the OFF position, the air in the circuit passes through the holes on the stem and automatically exhausts into the atmosphere.

Pressure Rating

4.35 psi ~ 145 psi
0.3 bar ~ 10 bar
0.003 MPa ~ 1.0 MPa

Component Parts and Materials

1 Aluminum sleeve
2 Nickel-plated brass stem
3 NBR O-ring
4 Steel shaft clip

Temperature Rating

-4 °F ~ 176 °F
-20 °C ~ 80 °C

Media

- Compressed air

Threads

NPTF

82660

SLIDE VALVE

Code	Usa Ref	A NPTF	B	L	CH	Pack
82660 00 001	82660-02	1/8	.984 (25)	1.890 (48)	.551 (14)	10
82660 00 002	82660-04	1/4	1.181 (30)	2.283 (58)	.669 (17)	10
82660 00 003	82660-06	3/8	1.378 (35)	2.756 (70)	.866 (22)	10
82660 00 004	82660-08	1/2	1.575 (40)	3.150 (80)	1.024 (26)	10



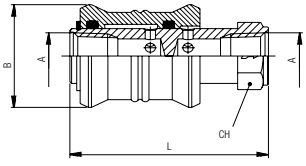

UNIDIRECTIONAL VALVES OR NON RETURN VALVES

TECHNICAL CHARACTERISTICS

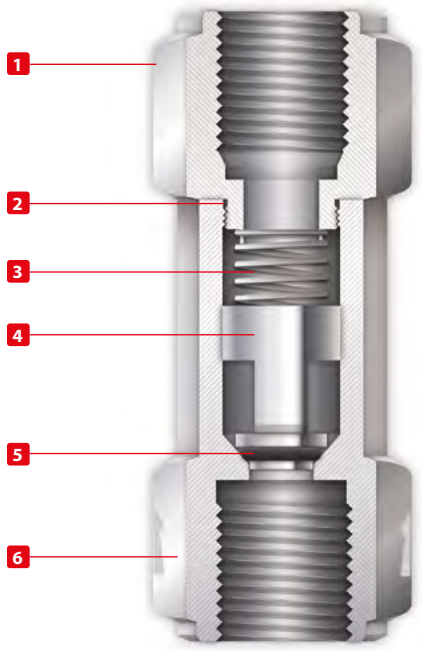

Reference Standard

1907/2006 REACH
2011/65/CE
PED 2014/68/UE
SILICON FREE

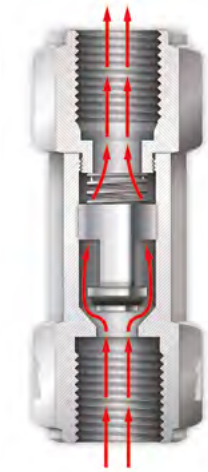

Check Valves allow air to flow in only one direction. They do not allow air flow the opposite direction.

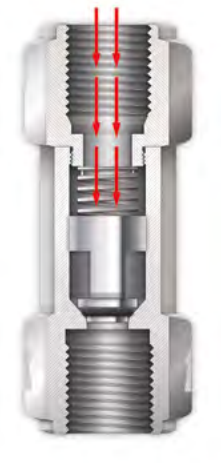

They operate directly with the air that passes through. Check Valves are normally used as safety device, permitting air pressure in a part of the circuit. The internal spring keeps the valve closed.

Pressure Rating

29 psi ~ 116 psi
2 bar ~ 8 bar
0.2 MPa ~ 0.8 MPa

Approximate Opening Pressure

2.9 psi
0.2 bar
0.02 MPa

Component Parts and Materials

1	Nickel-plated brass body
2	NBR O-ring
3	Steel spring
4	Nickel plated brass shutter
5	NBR O-ring
6	Nickel plated brass body

Temperature Rating

NBR
-4 °F ~ 176 °F
-20 °C ~ 80 °C

FKM *on request (only for 82662 -82663)*
5 °F ~ 392 °F
-15 °C ~ 200 °C

Media

- Compressed air

Threads

NPTF

82662

FEMALE X FEMALE

Code	Usa Ref	A NPTF	L	CH	Pack
82662 00 002	82662-02	1/8	1.437 (36.5)	.512 (13)	10
82662 00 003	82662-04	1/4	1.850 (47)	.669 (17)	10



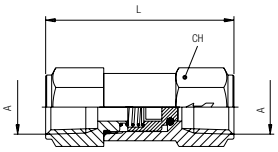

82663

MALE X MALE

Code	Usa Ref	A NPTF	L	ES	H	Pack
WB020 00 001	82663-04	1/4	1.220 (31)	.551 (14)	.512 (13)	10
WB029 00 001	82663-06	3/8	1.220 (31)	.748 (19)	.512 (13)	10



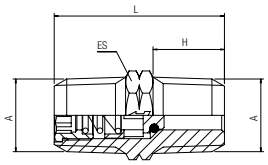

82664

INCH TUBE X TUBE

Code	Usa Ref	Tube	L	B	Pack
WB046 00 001	82664VM-04-04	1/4	2.047 (52)	.512 (13)	10
WB046 00 002	82664VM-06-06	3/8	2.244 (57)	.669 (17)	10



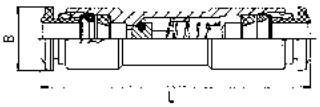

WB033

INLINE FILTER

Code	Usa Ref	Tube	L	CH1	CH2	Pack
WB033 VX 001	82670VM-04	1/4	2.579 (65.5)	.748 (19)	.512 (13)	10
WB033 VX 002	82670VM-06	3/8	2.835 (72)	.748 (19)	.669 (17)	10



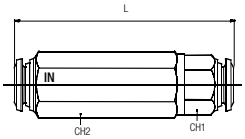

CHECK VALVE SPECIFICATIONS

Flow Rates of Exhaust

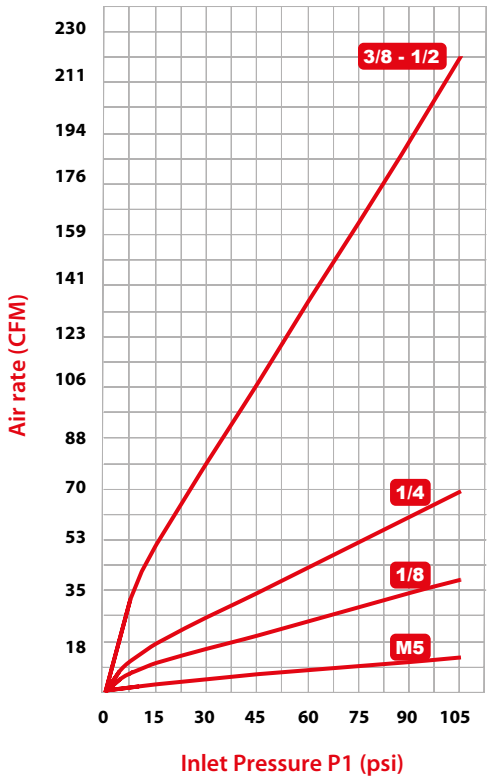

Flow Rates of Exhaust with a drop of 14.5 psi

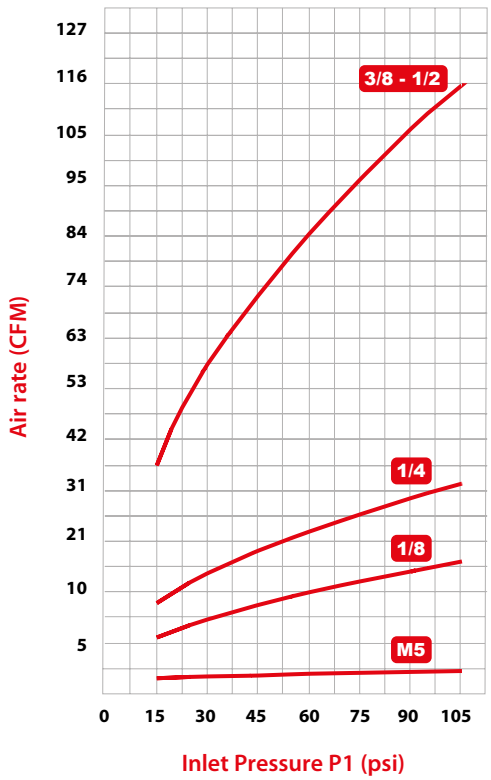

BLOCK VALVES

TECHNICAL CHARACTERISTICS

Aignep Block Valves are pneumatic devices used to control the movement of the cylinder. They install directly on the inlet and outlet ports of the cylinder and lock the piston in case of a drop in air pressure. Block Valves are used as safety devices in case of emergency stops, the bursting of an air tube, or anything that would stop the flow of air to the cylinder. Block Valves also enable the cylinder to be stopped in intermediate positions whenever the application would require such a solution.

Advantages

1. Aignep Block Valves are available in Uni-Directional and Bi-Directional versions.
2. The bore of these valves does not reduce in size so airflow is never restricted.
3. These valves are compact, and the threaded connection and tube connection can rotate for maximum versatility.
4. The threaded port can also receive a flow control valve to adjust the speed of the cylinder.

UNI-DIRECTIONAL
82880

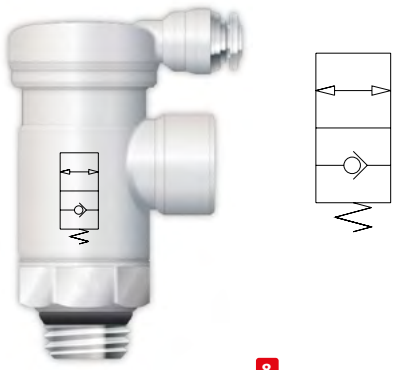

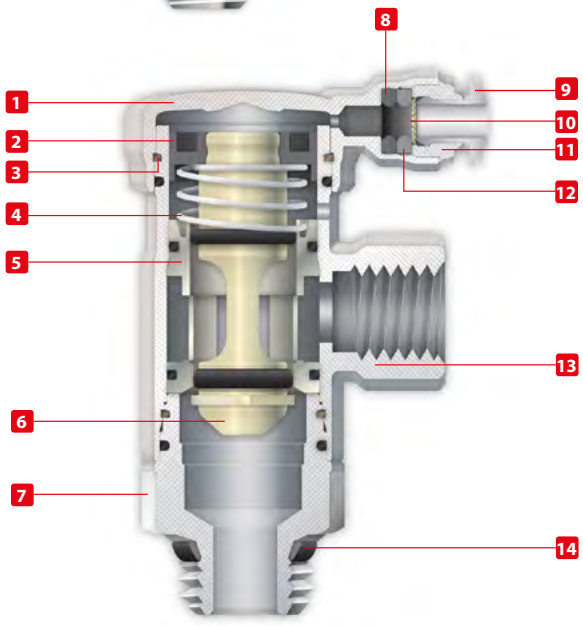

BI-DIRECTIONAL
82890

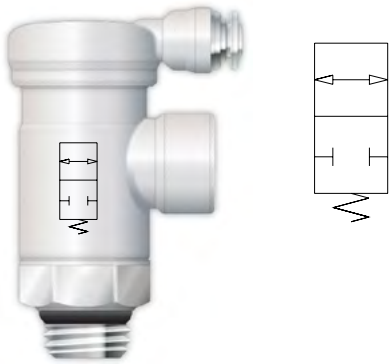

Reference Standard

1907/2006 REACH ✓ | 2011/65/CE RoHS | PED 2014/68/UE | SILICON FREE

Component Parts and Materials

1	Nickel-plated brass cover cap
2	Nylon lip seal
3	Brass retaining ring
4	Steel spring
5	Brass shutter support
6	Brass shutter
7	Nickel-plated brass base
8	NBR lip seal
9	Nickel-plated collet
10	303 stainless steel gripper
11	Nickel-plated brass sleeve
12	Technopolymer safety ring
13	Nickel-plated brass body
14	NBR thread seal

Size

1/8"
1/4"

Orifice

1/8"	1/4"
Ø 5.5 mm	Ø 8 mm

Flow rate (87 PSI)

1/8"	1/4"
26.5 CFM	50.1 CFM

Pressure Rating

4.35 psi ~ 145 psi
0.3 bar ~ 10 bar
0.03 MPa ~ 1.0 MPa

Temperature Rating

-4 °F ~ 176 °F
-20 °C ~ 80 °C

Media

- Compressed Air (lubricated and non lubricated)

82880

UNI-DIRECTIONAL CHECK VALVE



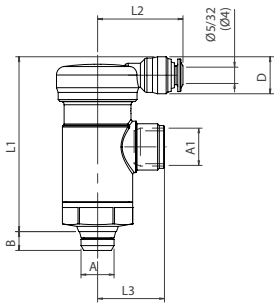

Code	Usa Ref	A	A1 NPTF	B	L1	L2	L3	CH	D	Pack
82880 00 002	82880-02	1/8	1/8	.217 (5.5)	1.969 (50)	.984 (25)	.728 (18.5)	.709 (18)	.433 (11)	10
82880 00 003	82880-04	1/4	1/4	.276 (7)	1.988 (50.5)	.984 (25)	.807 (20.5)	.709 (18)	.433 (11)	10

Installation

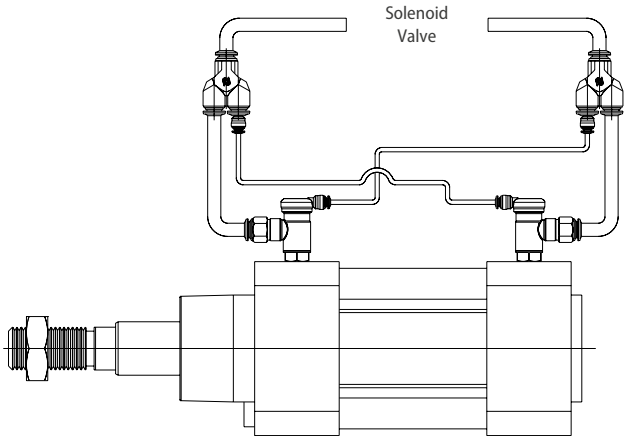

Pneumatic circuit - Cylinder in Action

The PO check circuit is connected to the cylinder circuit. When P1 pressure is applied to the directional control valve, pressure is applied simultaneously to PO check valve A and a pilot signal to PO check valve B. The cylinder will extend. When the directional control valve shifts, pressure is applied to PO check valve B with a pilot signal sent to PO check valve A. The cylinder will retract.

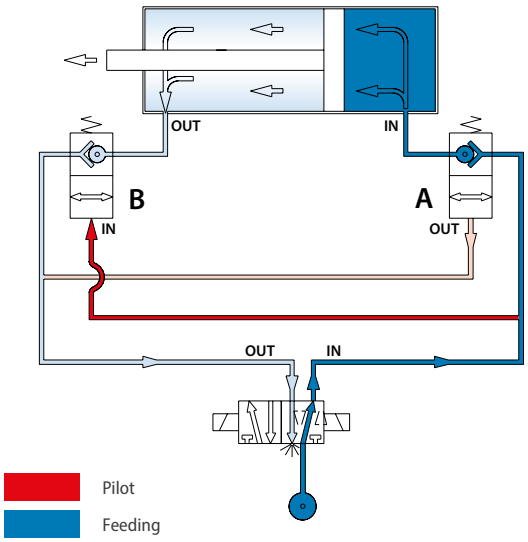

Pneumatic circuit - Cylinder at Rest

Remove P1 pressure from the directional control valve to lock the cylinder in place even under load conditions.

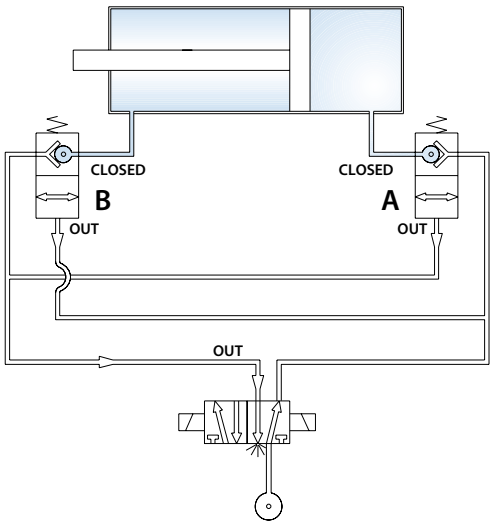

82890

BI-DIRECTIONAL BLOCK VALVE



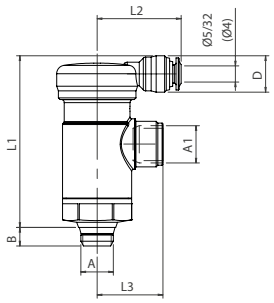

Code	Use Ref	A	A1 NPTF	B	L1	L2	L3	CH	D	Pack
82890 00 002	82890-02	1/8	1/8	.217 (5.5)	1.969 (50)	.984 (25)	.728 (18.5)	.709 (18)	.433 (11)	10
82890 00 003	82890-04	1/4	1/4	.276 (7)	1.988 (50.5)	.984 (25)	.807 (20.5)	.709 (18)	.433 (11)	10

Installation

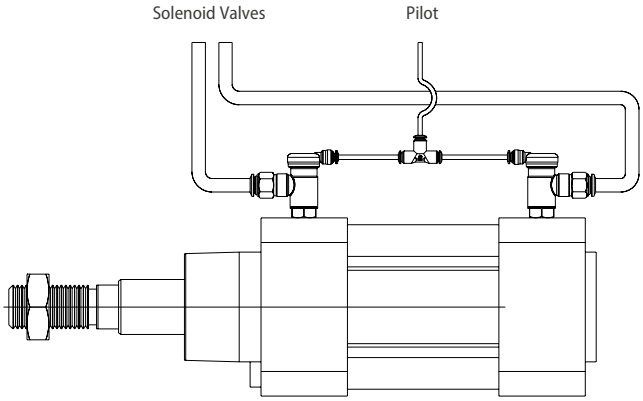

Pneumatic circuit - Cylinder in Action

Note, the cylinder circuit and the pilot valve circuit are independent. With a pilot signal applied to the PO block valves and P1 pressure to the directional control valve the cylinder will extend and retract normally.

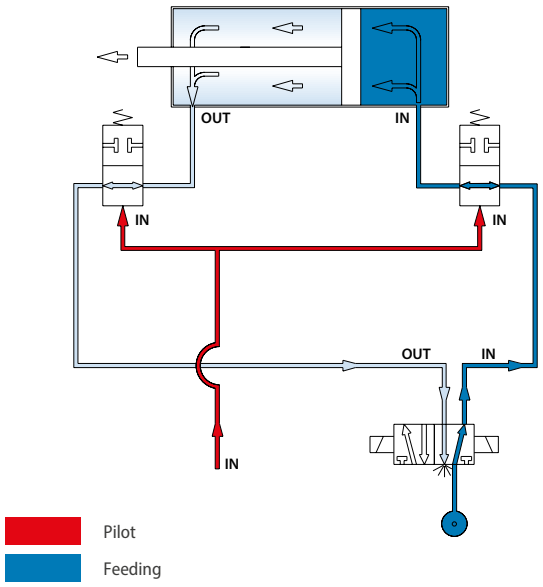

Pneumatic circuit - Cylinder at Rest

Remove the pilot signal pressure from the PO block valves to lock the cylinder in place even under load conditions.

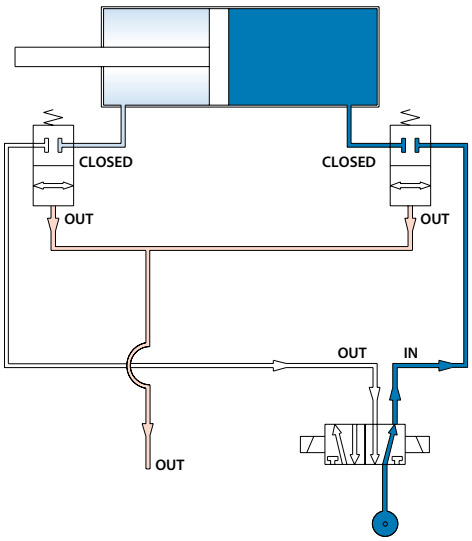

BLOCK VALVE SPECIFICATIONS

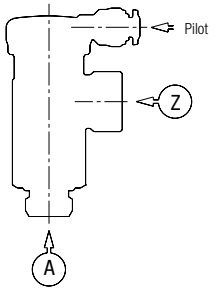

Pilot Pressure

Inlet Pressure

Pilot Pressure

Minimum pilot pressure is required to ensure proper valve function and is based on inlet pressure.

UNI-DIRECTIONAL
82880 1/8" - 1/4"

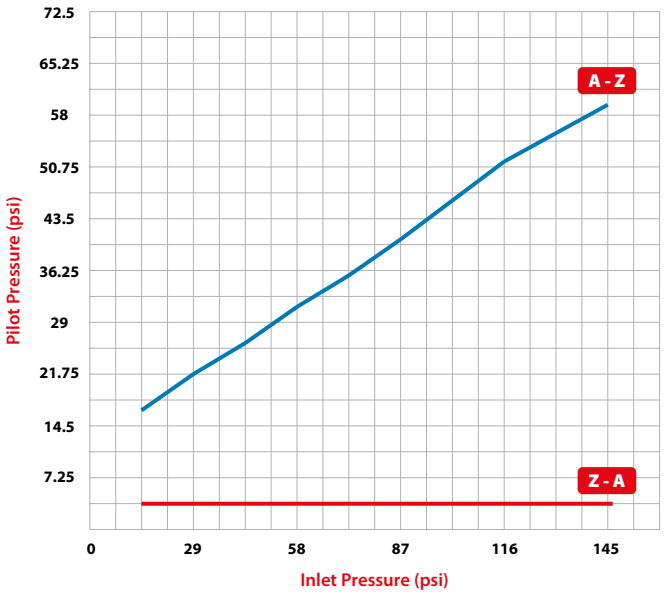

BI-DIRECTIONAL
82890 1/8" - 1/4"

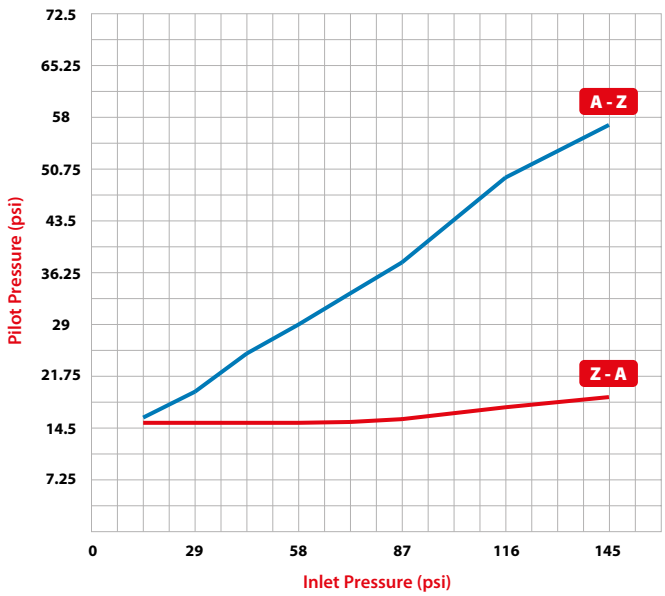

Flow Rates

82880 - 82890
1/8"

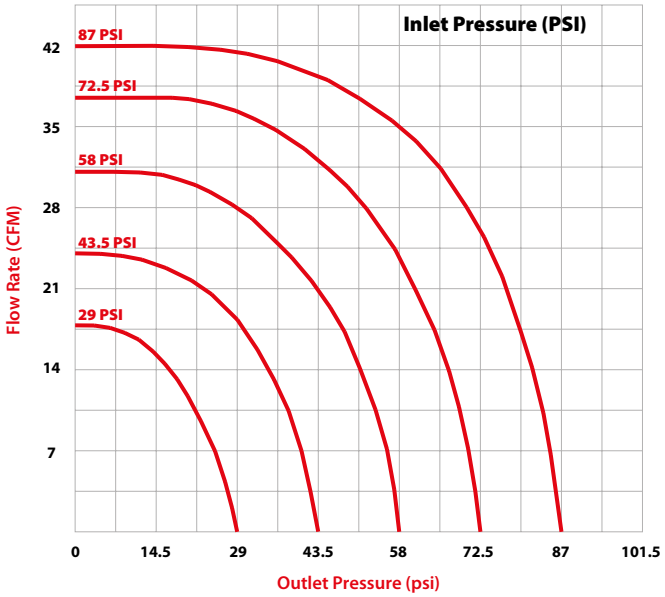

82880 - 82890
1/4"

