Valves Series

Solenoid Valves



01V
Pg. 18.3

Inox Solenoid Valves



X1V
Pg. 18.42

Solenoid Valves



07V
Pg. 18.50

Namur Solenoid Valves



08V
Pg. 18.53

Miniature Electropilots U1



AA
Pg. 18.60

Universal Valves G1/8 - G1/4



CL - CM
Pg. 18.67

Rotary Hand Lever Valves



12V
Pg. 18.96

Micro Valves



AI JET
Pg. 18.99

Micro Valves



AI JET2
Pg. 18.104

16mm Valves - Mechanical and Manual Operators



CH
Pg. 18.107

Pedal Valves



AM
Pg. 18.110

FIELDBUS Valves Series

Fieldbus Electropneumatic Valves



16V
Pg. 18.114

Fieldbus Electropneumatic Valves



17V
Pg. 18.121

ISO Valves Series

Valves ISO 5599/1 - Sizes 1 - 2 - 3 - 4



BE
Pg. 18.156

COILS & CONNECTORS Series

Solenoids and Connectors



Coils & Connectors
Pg. 18.169

Click here to view the Valves Series on our Website

AIGNEP

MANUAL, PNEUMATIC, SOLENOID PILOT, FIELDBUS, AND ISO VALVES

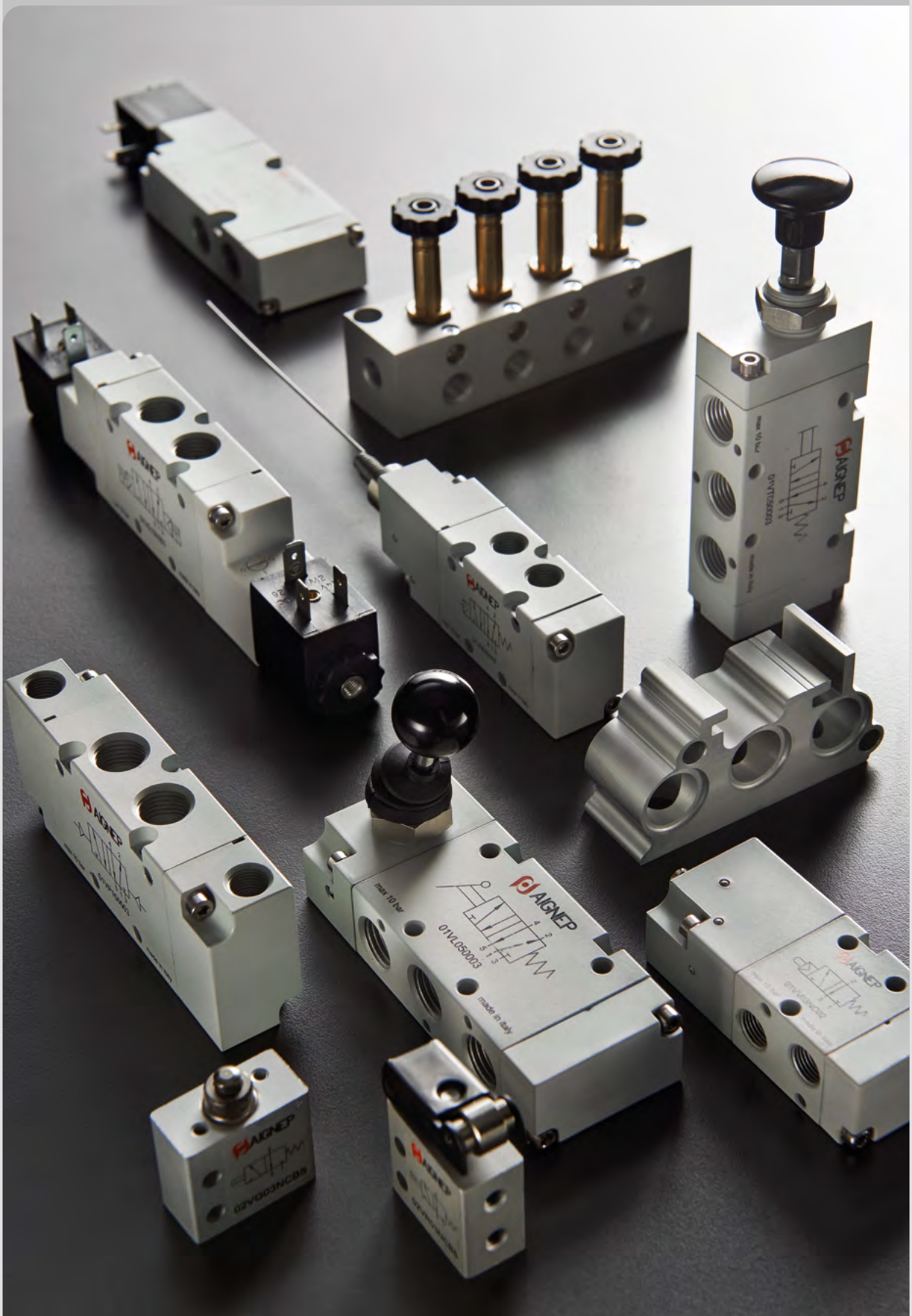

Valves Series

TECHNICAL CHARACTERISTICS



		1/4	1/2
THREAD		G 1/4	G 1/2
6 bar FLOW RATE with Δp 1 bar		1250 Nl/min	3000 Nl/min
TEMPERATURE	min	-58 °F -50 °C	
	max	122 °F 50 °C	
SOLENOID VOLTAGE		24V DC - 12V DC - 24V AC 110V AC - 220V AC	
MINIMUM POWER		3W - 5VA	
MANUAL CONTROL		BISTABLE	
TIGHTENING TORQUE OF THE SOLENOID'S NUT		0.6 Nm	

Reference Standard

1907/2006 REACH

2011/65/CE RoHS

PED 2014/68/UE

Component Parts and Materials

Stainless steel 316 L (1.4404) body
Stainless steel 316 L (1.4404) spool
PUR seals and FKM O-ring

Series	Actuation	Reactuation	Ways	Function	Size	Thread	Solenoid
X 1 V	S	1	3	N C	0 3		S A
	S = Solenoid	1 = Bistable	3 = 3/2	NC = Normally closed	03 = 1/4	= G	
		4 = Monostable pneumatic return	5 = 5/2	00 = Function not provided	05 = 1/2		

SA = SOL01012C1000
S1 = SOL01024A2000
SB = SOL01024C1000
SZ = SOL01024C3000
S2 = SOL01110A2000
S3 = SOL01220A2000

UA = SOLU1012C1000
U1 = SOLU1024A2000
UB = SOLU1024C1000
UZ = SOLU1024C3000
U2 = SOLU1110A2000
U3 = SOLU1220A2000

WA = SOLX1012C1000
W1 = SOLX1024A2000
WB = SOLX1024C1000

RA = SOLX2012C1000
R1 = SOLX2024A2000
RB = SOLX2024C1000
R2 = SOLX2110A2000
R3 = SOLX2220A2000

3/2

MONOSTABLE PNEUMATIC RETURN

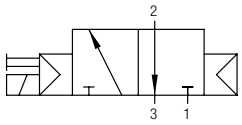

NC



Part No.	Function	Working pressure	Size	Pack.
X1V S4 3 NC 03	3/2 NC	29 ÷ 145 psi (2 ÷ 10 bar)	1/4	1
X1V S4 3 NC 05	3/2 NC	15 ÷ 145 psi (1 ÷ 10 bar)	1/2	1

X1V S4 3 NC 03

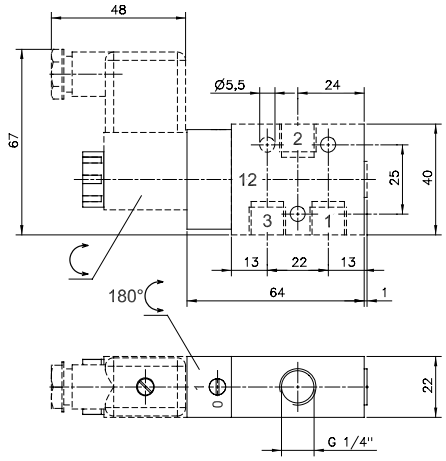

X1V S4 3 NC 05

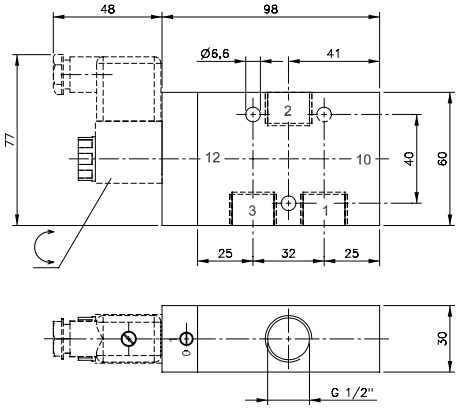

5/2

MONOSTABLE PNEUMATIC RETURN

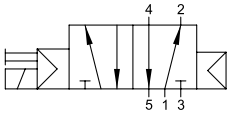



Part No.	Function	Working pressure	Size	Pack.
X1V S4 5 00 03	5/2	29 ÷ 145 psi (2 ÷ 10 bar)	1/4	1
X1V S4 5 00 05	5/2	29 ÷ 145 psi (2 ÷ 10 bar)	1/2	1

X1V S4 5 00 03

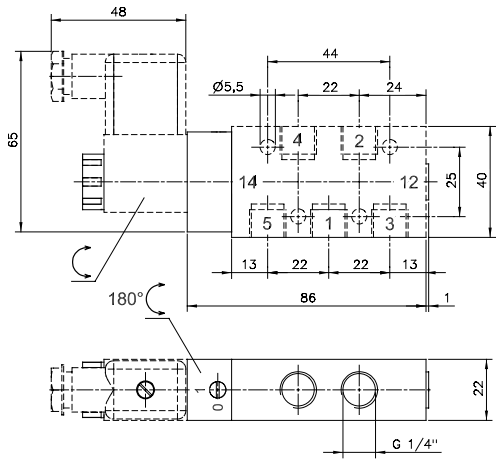

X1V S4 5 00 05

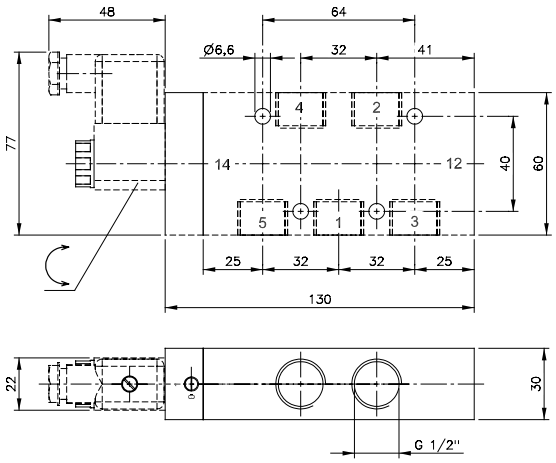

5/2

TWO STABLE POSITIONS

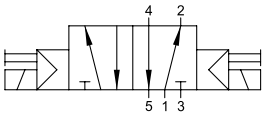



Part No.	Function	Working pressure	Size	Pack.
X1V S1 5 00 03	5/2	29 ÷ 145 psi (2 ÷ 10 bar)	1/4	1
X1V S1 5 00 05	5/2	15 ÷ 145 psi (1 ÷ 10 bar)	1/2	1

X1V S1 5 00 03

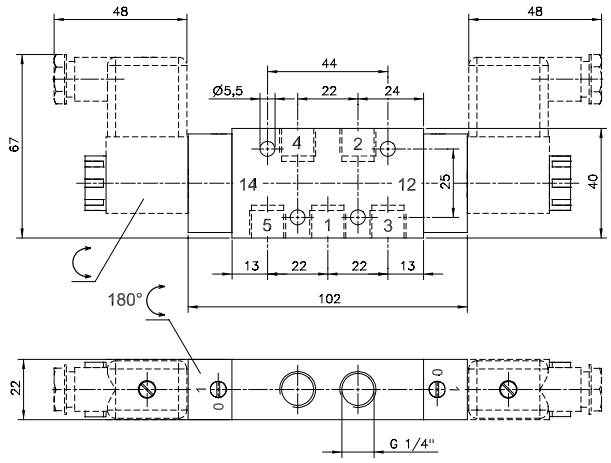

X1V S1 5 00 05

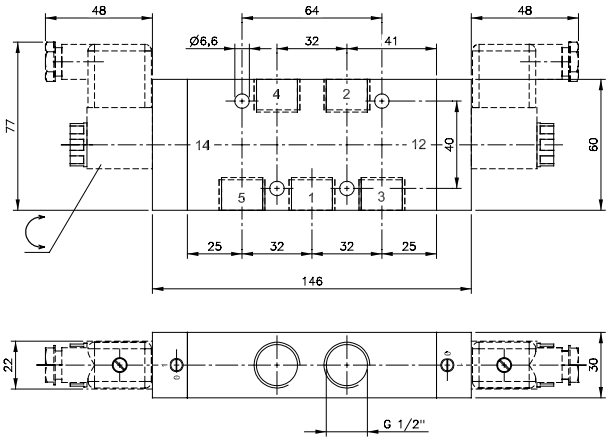

TECHNICAL CHARACTERISTICS



		1/4
THREAD		G 1/4
6 bar FLOW RATE with Δp 1 bar		1250 Nl/min
OPERATING PRESSURE		15 ÷ 145 psi (1 ÷ 10 bar)
TEMPERATURE	min	-58 °F -50 °C
	max	122 °F 50 °C
ACTIVATION FORCE		20 N

Reference Standard

1907/2006 REACH ✓ | 2011/65/CE RoHS | PED 2014/68/UE

Component Parts and Materials

Stainless Steel 316 L (1.4404) body
Stainless Steel 316 L (1.4404) spool
PUR seals and FKM O-ring

Series	Actuation	Reactuation	Ways	Function	Size
X 1 V	L	0	3	N C	0 3
	L = 90° Lever	0 = Monostable spring return 1 = Bistable 2 = Stable in 3 positions	3 = 3/2 5 = 5/2 7 = 5/3	NC = Normally closed CC = Center closed OC = Center exhausted PC = Center in pressurized 00 = Function not provided	03 = 1/4

3/2 Ways

MONOSTABLE SPRING RETURN

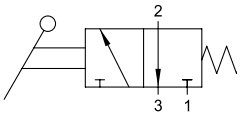



Code	Ways	Function	Size	Pack.
X1V L0 3 NC 03	3/2	NC	1/4	1

3/2 Ways

TWO STABLE POSITIONS

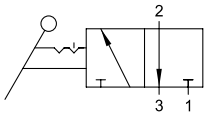



Code	Ways	Size	Pack.
X1V L1 3 00 03	3/2	1/4	1

X1V L0 3 NC 03 X1V L1 3 00 03

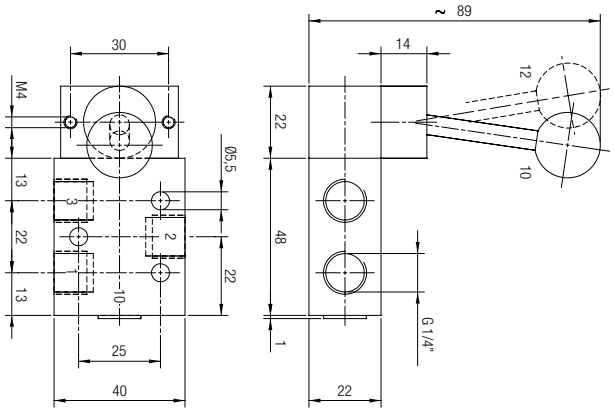

5/2 Ways

MONOSTABLE SPRING RETURN

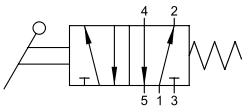



Code	Ways	Size	Pack.
X1V L0 5 00 03	5/2	1/4	1

5/2 Ways

TWO STABLE POSITIONS

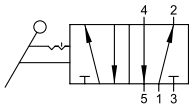



Code	Ways	Size	Pack.
X1V L1 5 00 03	5/2	1/4	1

X1V L0 5 00 03 X1V L1 5 00 03

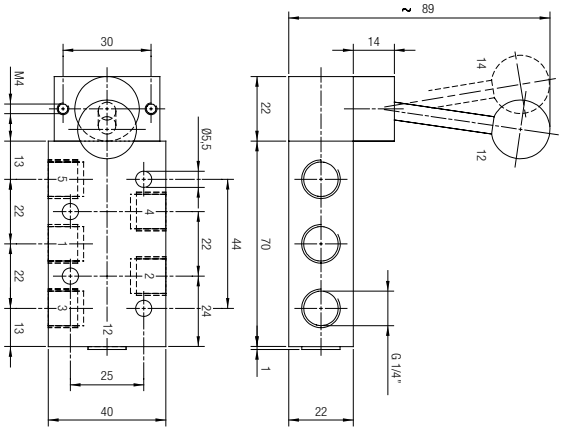

5/3 Ways

MONOSTABLE SPRING RETURN

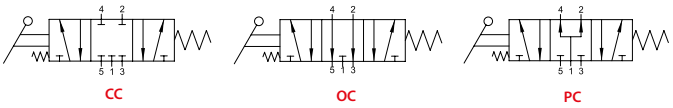



Code	Ways	Function	Size	Pack.
X1V L0 7 CC 03	5/3	CC	1/4	1
X1V L0 7 OC 03	5/3	OC	1/4	1
X1V L0 7 PC 03	5/3	PC	1/4	1

5/3 Ways

3 STABLE POSITIONS

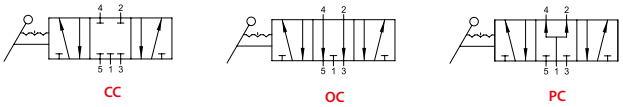



Code	Ways	Function	Size	Pack.
X1V L2 7 CC 03	5/3	CC	1/4	1
X1V L2 7 OC 03	5/3	OC	1/4	1
X1V L2 7 PC 03	5/3	PC	1/4	1

X1V L0 7 CC 03 X1V L0 7 OC 03 X1V L0 7 PC 03
X1V L2 7 CC 03 X1V L2 7 OC 03 X1V L2 7 PC 03

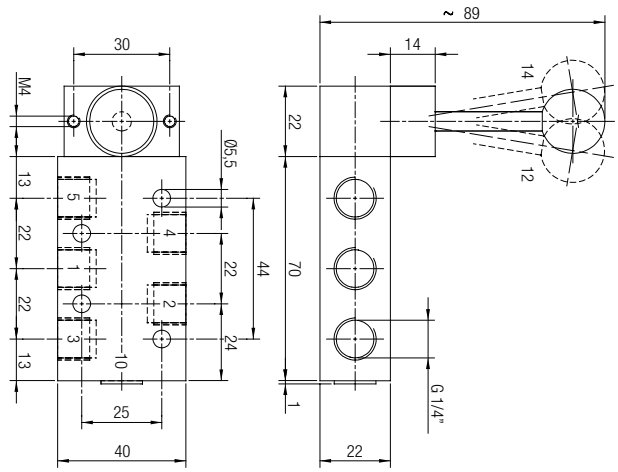

COILS AND CONNECTORS

COILS AND CONNECTORS COMPATIBILITY








		SOLU1	SOL01	SOLX1	SOLX2	U1	U3
		22 mm	22 mm	30 mm	22 mm	22 mm	30 mm
01V		■	■	■	■		
07V		■	■		■		
08V		■	■		■		
AA						■	■
CL-CM						■	
BE							■

SOLU1 COIL

22 mm

9 mm Ø



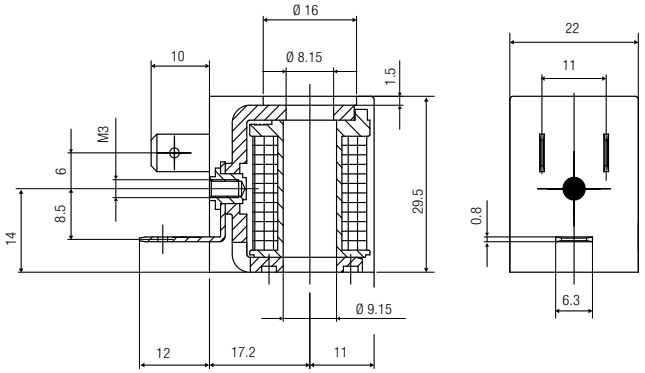

UL 1446 & CSA C22.2

Code	Short Code	Voltage	Power	Voltage tolerance	Ambient temperature	
					Min	Max
SOLU1 012 C 1 000	UA	12V DC	3W	±10 %	-4 °F (-20 °C)	+122 °F (+50 °C)
SOLU1 024 C 1 000	UB	24V DC	3W	±10 %	-4 °F (-20 °C)	+122 °F (+50 °C)
* SOLU1 024 C 3 000	UZ	24V DC	2W	±10 %	-4 °F (-20 °C)	+122 °F (+50 °C)
SOLU1 024 A 2 000	U1	24V AC	5VA	±10 %	-4 °F (-20 °C)	+122 °F (+50 °C)
SOLU1 110 A 2 000	U2	110V AC	5VA	±10 %	-4 °F (-20 °C)	+122 °F (+50 °C)
SOLU1 220 A 2 000	U3	220V AC	5VA	±10 %	-4 °F (-20 °C)	+122 °F (+50 °C)

* Solenoid Recommended (ECO-FRIENDLY), only for 01V - 07V - 08V.

INSULATION CLASS	H CEI EN 60085	ENCAPSULATION MATERIAL	RYNITE®	ELECTRICAL CONNECTIONS	INDUSTRIAL AMP FORM B - INDUSTRIAL *EN 175301-803* *(EX DIN 43650)*
AMBIENT TEMPERATURE	-4 °F +122 °F	PROTECTION DEGREE	IP65 IEC 60529 WITH CONNECTOR IP65	DUTY RATE	ED 100 %

SOL01 COIL

22 mm

9 mm Ø



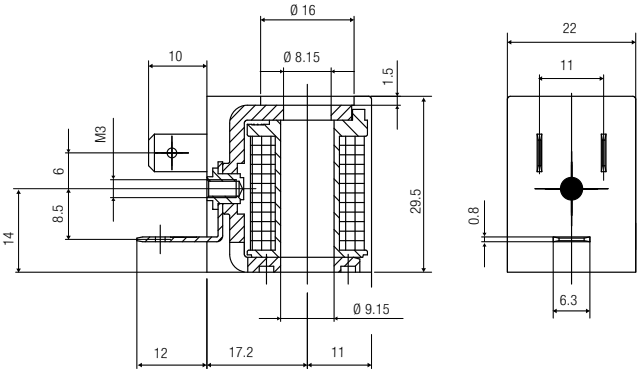

CE

Code	Short Code	Voltage	Power	Voltage tolerance	Ambient temperature	
					Min	Max
SOL01 012 C 1 000	SA	12V DC	3W	±10 %	-4 °F (-20 °C)	+122 °F (+50 °C)
SOL01 024 C 1 000	SB	24V DC	3W	±10 %	-4 °F (-20 °C)	+122 °F (+50 °C)
* SOL01 024 C 3 000	SZ	24V DC	2W	±10 %	-4 °F (-20 °C)	+122 °F (+50 °C)
SOL01 024 A 2 000	S1	24V AC	5VA	±10 %	-4 °F (-20 °C)	+122 °F (+50 °C)
SOL01 110 A 2 000	S2	110V AC	5VA	±10 %	-4 °F (-20 °C)	+122 °F (+50 °C)
SOL01 220 A 2 000	S3	220V AC	5VA	±10 %	-4 °F (-20 °C)	+122 °F (+50 °C)

* Solenoid Recommended (ECO-FRIENDLY), only for 01V - 07V - 08V.

INSULATION CLASS	F CEI EN 60085	ENCAPSULATION MATERIAL	PA	ELECTRICAL CONNECTIONS	INDUSTRIAL AMP FORM B - INDUSTRIAL *EN 175301-803* *(EX DIN 43650)*
AMBIENT TEMPERATURE	-4 °F +122 °F	PROTECTION DEGREE	IP65 IEC 60529 WITH CONNECTOR IP65	DUTY RATE	ED 100 %

SOLX1 COIL

22 mm

9 mm Ø



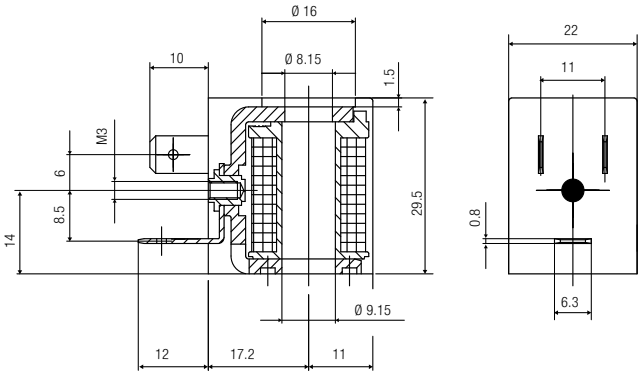

II 3G Ex nA IIC T5 Gc | II 3D Ex tc IIIC 95 °C Dc

Code	Short Code	Voltage	Power	Voltage tolerance	Ambient temperature	
					Min	Max
SOLX1 012 C 1 000	WA	12V DC	3W	±10 %	+5 °F (-15 °C)	+122 °F (+50 °C)
SOLX1 024 C 1 000	WB	24V DC	3W	±10 %	+5 °F (-15 °C)	+122 °F (+50 °C)
SOLX1 024 A 2 000	W1	24V AC	5VA	±10 %	+5 °F (-15 °C)	+122 °F (+50 °C)

INSULATION CLASS	F CEI EN 60085
ENCAPSULATION MATERIAL	PA
ELECTRICAL CONNECTION	INDUSTRIAL AMP FORM B - INDUSTRIAL *EN 175301-803* *(EX DIN 43650)*
AMBIENT TEMPERATURE	+5 °F +122 °F
PROTECTION DEGREE	IP65 IEC 60529 WITH CONNECTOR IP65
DUTY RATE	ED 100 %

SOLX2 COIL

30 mm

9 mm Ø



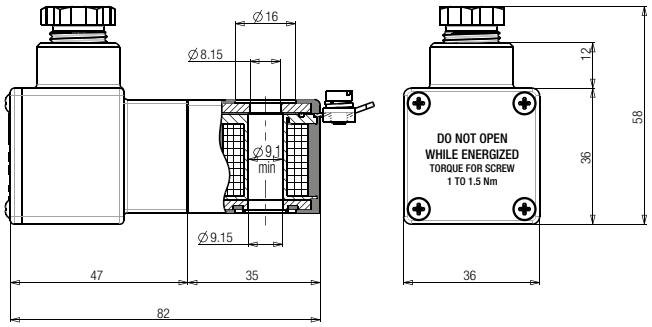

II 2G Ex db mb IIC T5 Gb | II 2D Ex tb IIIC T5 Db

Code	Short Code	Voltage	Power	Voltage tolerance	Ambient temperature	
					Min	Max
SOLX2 012 C 1 000	RA	12V DC	3W	±10 %	-58 °F (-50 °C)	+122 °F (+50 °C)
SOLX2 024 C 1 000	RB	24V DC	3W	±10 %	-58 °F (-50 °C)	+122 °F (+50 °C)
SOLX2 024 A 2 000	R1	24V AC	4,8VA	±10 %	-58 °F (-50 °C)	+122 °F (+50 °C)
SOLX2 110 A 2 000	R2	110V AC	4,8VA	±10 %	-58 °F (-50 °C)	+122 °F (+50 °C)
SOLX2 220 A 2 000	R3	220V AC	4,8VA	±10 %	-58 °F (-50 °C)	+122 °F (+50 °C)

Do not use with 01VB bases

With 08V NAMUR valves use the 08V01 spacer

INSULATION CLASS	F CEI EN 60085	ENCAPSULATION MATERIAL	PA	ELECTRICAL CONNECTIONS	PG9
AMBIENT TEMPERATURE	-58 °F +122 °F	PROTECTION DEGREE	IP66 IEC 60529	DUTY RATE	ED 100 %

COILS

CSA/UL

Possibility of replacement without intervention in the pneumatic circuit
Other voltages available upon request
360° rotation on the pilot. Coil winding: H class
Ambient temperature: +14 ÷ +113 °F. Fluid temperature: +14 ÷ +203 °F.
The solenoid valves functioning with 100V-230V must be incorporated (EN60204-1)
Under continuous service a maximum temperature will not compromise the functioning of the coil provided that the working position is ventilated.
Protection class IP65, if used with connector.

COILS U1

22 mm

10 mm Ø



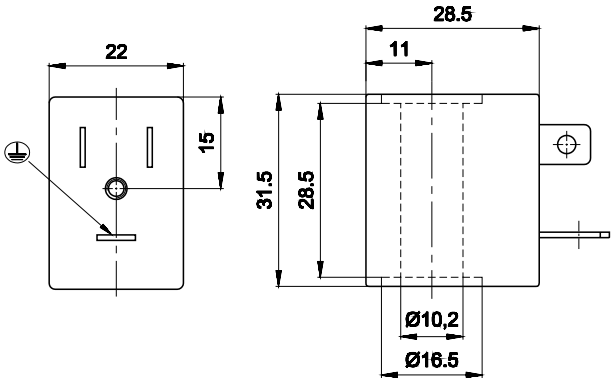

Code	Duty cycle ED (a) %	Power consumption W		Tolerance tension %	Rated voltage	Weight lb (Kg)
		Hold	Inrush			
UDA 0050	100	3,5	3,5	±10	12 V DC	0.13 (0.06)
UDA 0051	100	3,5	3,5	±10	24 V DC	0.13 (0.06)
UDA 0106	100	5,4 VA (Max)	7,8 VA (Max)	±10	24 V AC/50-60 HZ	0.13 (0.06)
UDA 0108	100	5,4 VA (Max)	7,8 VA (Max)	±10	110 V AC/50-60 HZ	0.13 (0.06)
UDA 0124	100	5,4 VA (Max)	7,8 VA (Max)	±10	230 V AC/50-60 HZ	0.13 (0.06)

COILS U3

30 mm

10 mm Ø

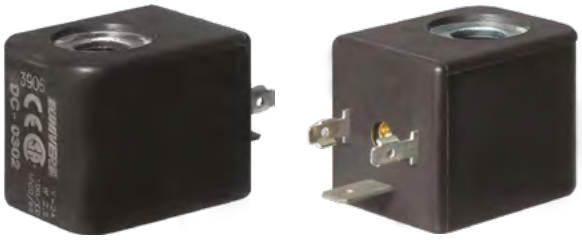

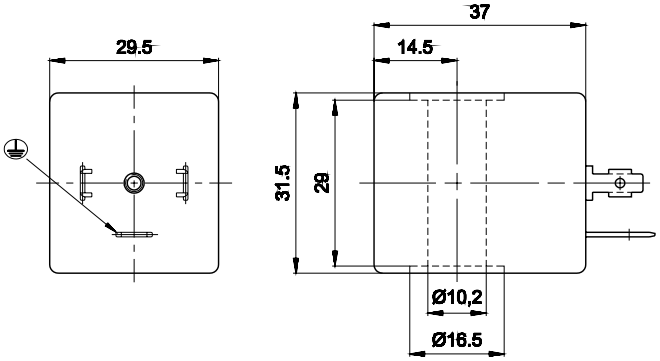

Code	Duty cycle ED (a) %	Power consumption W		Tolerance tension %	Rated voltage	Weight lb (Kg)
		Hold	Inrush			
UDC 0301	100	2,5	2,5	±10	12 V DC	0.18 (0.08)
UDC 0302	100	2,5	2,5	±10	24 V DC	0.18 (0.08)
UDC 0307	100	3,3 VA (Max)	5 VA (Max)	±10	24 V AC/50-60 HZ	0.18 (0.08)
UDC 0309	100	3,3 VA (Max)	5 VA (Max)	±10	110 V AC/50-60 HZ	0.18 (0.08)
UDC 0310	100	3,3 VA (Max)	5 VA (Max)	±10	230 V AC/50-60 HZ	0.18 (0.08)

(a) = 110V - 230V solenoid valves must be built-in (EN-60204-1)
Under continuous service a maximum temperature will not compromise the functioning of the coil provided that the working position is ventilated

CON01 - CONU1 CONNECTOR

22 mm





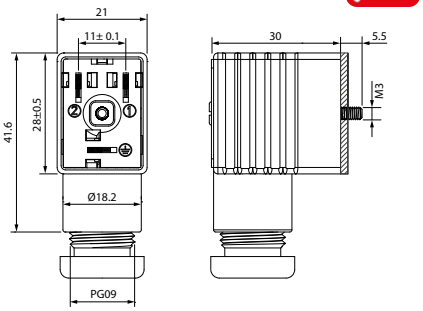

c UL us





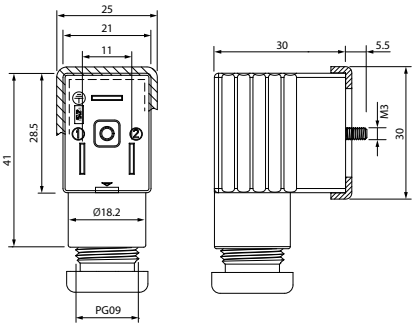

	Code		Size	Color	Characteristics
	CON01 000 01		.866 (22 mm)	BLACK	2 PINS
	CON02 024 00		.866 (22 mm)	TRANSPARENT	LED + VDR 0 - 24V
	CON02 110 00		.866 (22 mm)	TRANSPARENT	LED + VDR 110V
	CON02 250 00		.866 (22 mm)	TRANSPARENT	LED + VDR 220V
*	CONU1 000 01	c UL us	.866 (22 mm)	BLACK	2 PINS
*	CONU2 024 00	c UL us	.866 (22 mm)	TRANSPARENT	LED + VDR 0 - 24V
*	CONU2 110 00	c UL us	.866 (22 mm)	TRANSPARENT	LED + VDR 110V
*	CONU2 250 00	c UL us	.866 (22 mm)	TRANSPARENT	LED + VDR 220V

*: UL 1977 AND CAN/CSA C22.2 NO. 182.3

VDR: Fitted with varistors as surge protection device.

Wiring

CON01 000 01
CONU1 000 01

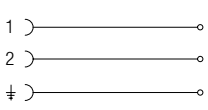

CON02 024 00 CON02 110 00 CON02 250 00
CONU2 024 00 CONU2 110 00 CONU2 250 00

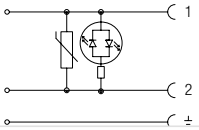

ELECTRICAL CONNECTION	INDUSTRIAL AMP FORM B - INDUSTRIAL *EN 175301-803 (EX DIN 43650)*	PROTECTION DEGREE	IP67 IEC 60529
CABLE DIAMETER	1/4 ÷ 5/16 (6 ÷ 8 mm)		

CONX1 CONNECTOR

22 mm



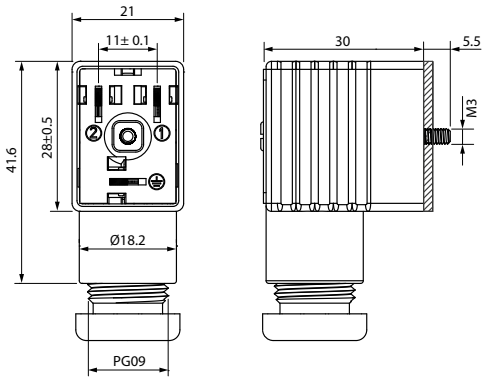

II 2G Ex e IIC T6 Gb | II 2D Ex tb IIIC T85°C Db

Code	Size	Color	Characteristics
CONX1 000 01	.866 (22 mm)	BLACK	2 PINS

Wiring

CONX1 000 01



ELECTRICAL CONNECTIONS	INDUSTRIAL AMP FORM B - INDUSTRIAL *EN 175301-803 (EX DIN 43650)*	PROTECTION DEGREE	IP67 IEC 60529	CABLE DIAMETER	1/4 ÷ 5/16 (6 ÷ 8 mm)

CON3 - CONU3 CONNECTOR

30 mm





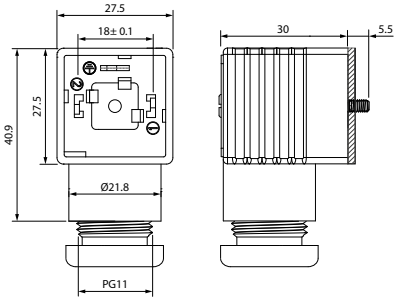

c UL us





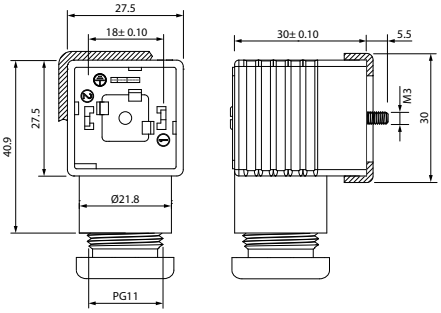

		Size	Color	Characteristics
	CON31 000 01	30 - 36 mm	BLACK	2 PINS
	CON32 024 00	30 - 36 mm	TRANSPARENT	LED + VDR 0 - 24V
	CON32 110 00	30 - 36 mm	TRANSPARENT	LED + VDR 110V
	CON32 250 00	30 - 36 mm	TRANSPARENT	LED + VDR 220V
*	CONU3 100 01	30 - 36 mm	BLACK	2 PINS
*	CONU3 202 40	30 - 36 mm	TRANSPARENT	LED + VDR 0 - 24V
*	CONU3 211 00	30 - 36 mm	TRANSPARENT	LED + VDR 110V
*	CONU3 225 00	30 - 36 mm	TRANSPARENT	LED + VDR 220V

*: UL 1977 AND CAN/CSA C22.2 NO. 182.3

VDR: Fitted with varistors as surge protection device.

Wiring

CON31 000 01
CONU3 100 01

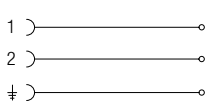

CON32 024 00 CON32 110 00 CON32 250 00
CONU3 202 40 CONU3 211 00 CONU3 225 00

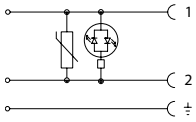

ELECTRICAL CONNECTIONS	**FORM A** *EN 175301-803 (EX DIN 43650)*	PROTECTION DEGREE	**IP67 IEC 60529**
CABLE DIAMETER	**6 ÷ 8 MM & 8 ÷ 11 MM**		