Valves Series

Solenoid Valves



01V
Pg. 18.3

Inox Solenoid Valves



X1V
Pg. 18.42

Solenoid Valves



07V
Pg. 18.50

Namur Solenoid Valves



08V
Pg. 18.53

Miniature Electropilots U1



AA
Pg. 18.60

Universal Valves G1/8 - G1/4



CL - CM
Pg. 18.67

Rotary Hand Lever Valves



12V
Pg. 18.96

Micro Valves



AI JET
Pg. 18.99

Micro Valves



AI JET2
Pg. 18.104

16mm Valves - Mechanical and Manual Operators



CH
Pg. 18.107

Pedal Valves



AM
Pg. 18.110

FIELDBUS Valves Series

Fieldbus Electropneumatic Valves



16V
Pg. 18.114

Fieldbus Electropneumatic Valves



17V
Pg. 18.121

ISO Valves Series

Valves ISO 5599/1 - Sizes 1 - 2 - 3 - 4



BE
Pg. 18.156

COILS & CONNECTORS Series

Solenoids and Connectors



Coils & Connectors
Pg. 18.169

Click here to view the Valves Series on our Website

AIGNEP

MANUAL, PNEUMATIC, SOLENOID PILOT, FIELDBUS, AND ISO VALVES

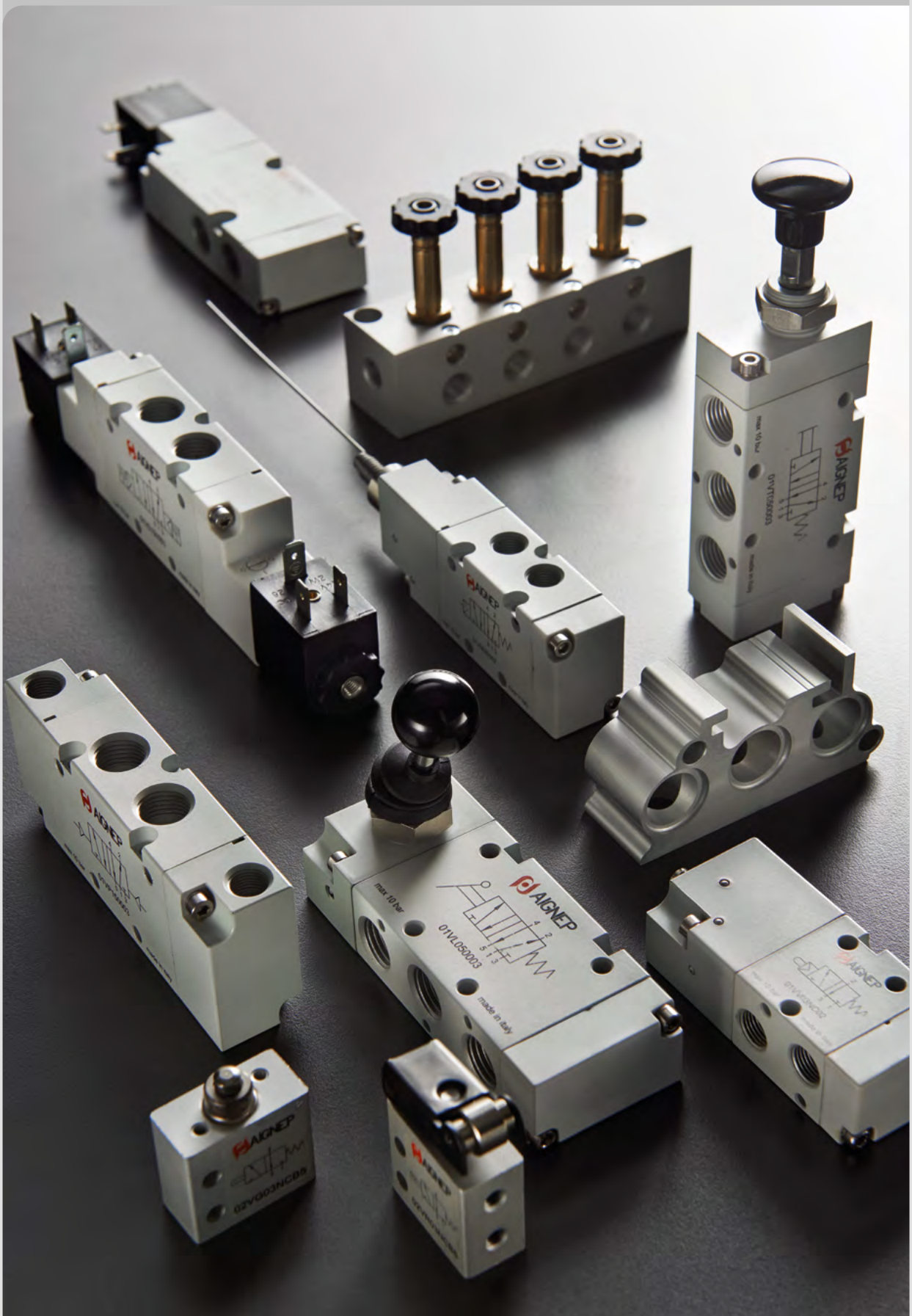

Valves Series

FIELDBUS ELECTROPNEUMATIC VALVES

10 mm

Flow rate:
200 220 Nl/min



1907/2006 REACH ✓ | 2011/65/CE RoHS ✓ | PED 2014/68/UE

Component Parts and Materials

Body in anodized aluminum
Base in anodized aluminum
Spool in aluminum
Piston and spool seals in elastomer
Springs: AISI 302 stainless steel

Threaded connections

Integrated electrical connection system
IP63 protection
10 mm thickness
Single-sided solenoid valves
Same overall dimensions for monostable and bistable valves
Connections for use with female thread at the base
Quick, fast, and with few elements of the solenoid valve group

TYPE OF SOLENOID VALVE				Elastomer sealing
FLUIDS				Air
OPERATING PRESSURE	Monostable pneumatic return			22 ÷ 102 psi (1.5 ÷ 7 bar)
	2-way valve bistable			15 ÷ 102 psi (1 ÷ 7 bar)
	5/4-way valve double (3/2)			22 ÷ 102 psi (1.5 ÷ 7 bar)
WORKING PRESSURE WITH SEPARATE PILOTED VALVE	Working pressure field			-14 ÷ 145 psi (-0.99 ÷ 10 bar)
	Max. Pressure at Exhaust			102 psi (7 bar)
	Piloting pressure field	Monostable pneumatic return		36 ÷ 102 psi (2.5 ÷ 7 bar)
		Monostable mechanical spring return		44 ÷ 102 psi (3 ÷ 7 bar)
		2-way valve bistable		36 ÷ 102 psi (2.5 ÷ 7 bar)
		5/4-way valve double (3/2)		36 ÷ 102 psi (2.5 ÷ 7 bar)
OPERATING TEMPERATURE				23 ÷ 122 °F -5 ÷ 50 °C Without freezing
MANUAL CONTROL				Rotating with lock

WITH PILOT EXHAUST	Internal Pilot			Common outlet for main/pilot valve
	External Pilot			Individual outlet for pilot valve
SUGGESTED FILTRATION	≤ 20 µm	LUBRICATION		Not necessary
PROTECTION DEGREE				IP63
VOLTAGE	24 VDC	POWER CONSUMPTION		1.3 W
ALLOWABLE VOLTAGE FLUCTUATIONS (V)	±10% of nominal voltage	MAX SWITCHING FREQUENCY		3 Hz
VISUAL SIGNAL OF PILOT VALVE				LED

SWITCHING TIMES	5/4	5/2 Pneumatic return	5/2 Spring return	5/2 Bistable	5/3 Monostable
Switching time on (ms) OUT (2)	11	21	17	14	17
Switching time on (ms) OUT (4)	19	-	-	19	31
Switching time off (ms) OUT (2)	26	-	-	-	-
Switching time off (ms) OUT (4)	41	44	56	-	-

5/2 Ways

MONOSTABLE WITH PNEUMATIC RETURN



Code	Ways	Flow rate	Weight
17V S4 5 00 00	5/2	220 Nl/min	0.11 lb (52g)

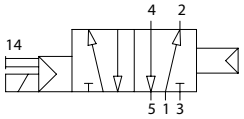

5/2 Ways

TWO STABLE POSITIONS



Code	Ways	Flow rate	Weight
17V S1 5 00 00	5/2	220 Nl/min	0.13 lb (60g)

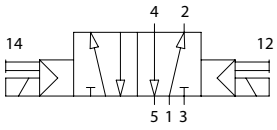

17V S4 5 00 C0

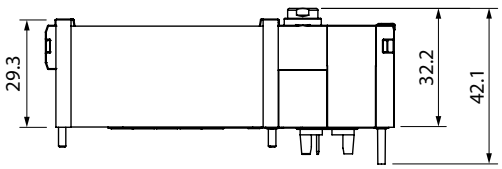

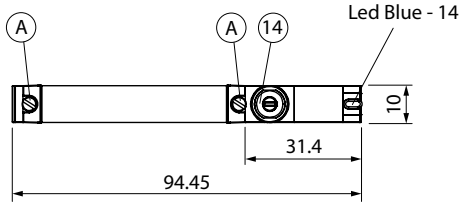

11V S1 5 00 C0

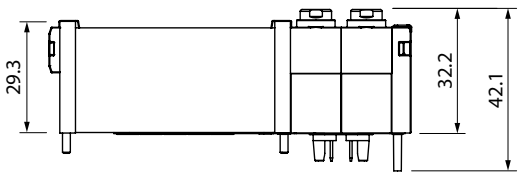

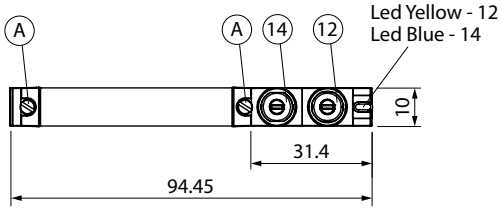

Screw tightening torque for fixing the component to the base

(A) 0.4 Nm

5/4 Ways

DOUBLE 3/2 MONOSTABLE MECHANICAL SPRING RETURN

Code	Ways	Function	Flow rate	Weight
17V S0 8 NC 00	5/4	NC	200 Nl/min	0.13 lb (60g)
17V S0 8 NO 00	5/4	NO	200 Nl/min	0.13 lb (60g)
17V S0 8 NN 00	5/4	NC-NO	200 Nl/min	0.13 lb (60g)

Monostable spring return



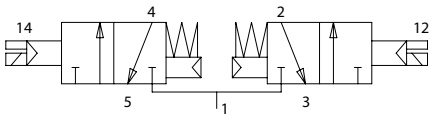

NC - NC

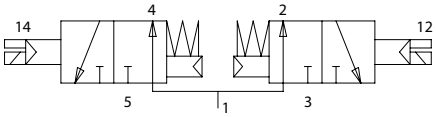

NO - NO

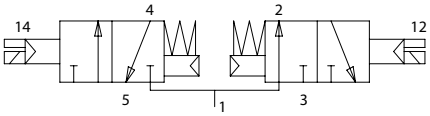

NC - NO

5/4 Ways

DOUBLE 3/2 MONOSTABLE MECHANICAL SPRING RETURN

Code	Ways	Function	Flow rate	Weight
17V S4 8 NC 00	5/4	NC	200 Nl/min	0.13 lb (59g)
17V S4 8 NO 00	5/4	NO	200 Nl/min	0.13 lb (59g)
17V S4 8 NN 00	5/4	NC-NO	200 Nl/min	0.13 lb (59g)

Pneumatic return

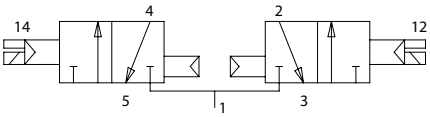

NC - NC

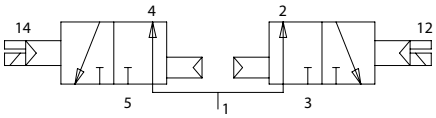

NO - NO

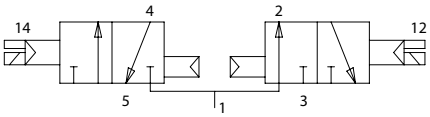

NC - NO

17V S0 8 NC 00 17V S0 8 NO 00 17V S0 8 NN 00
17V S4 8 NC 00 17V S4 8 NO 00 17V S4 8 NN 00

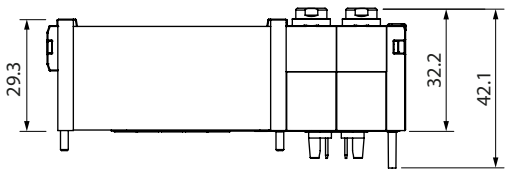

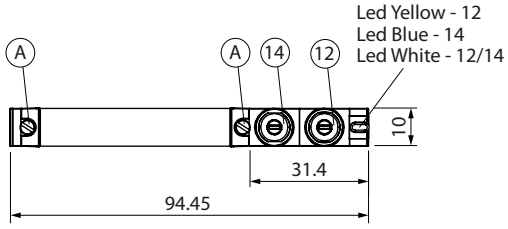

Screw tightening torque for fixing the component to the base

(A) 0.4 Nm

17V20

PLUG FOR UNUSED POSITIONS



Code	Screw tightening torque	Weight
17V 20 0 00 00	(A) 0.4 N	0.17 lb (75g)

17V21

INTERMEDIATE SUPPLY BLOCK



Code	Screw tightening torque	Weight
17V 21 0 00 00	(A) 0.4 N	0.15 lb (70g)

17V 20 0 00 00

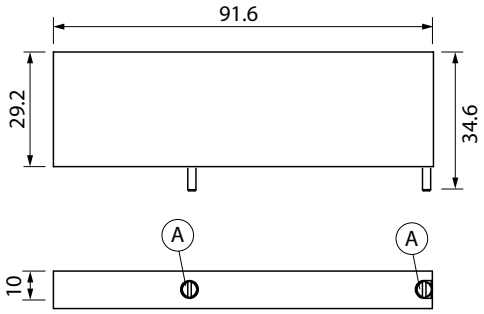

17V 21 0 00 00

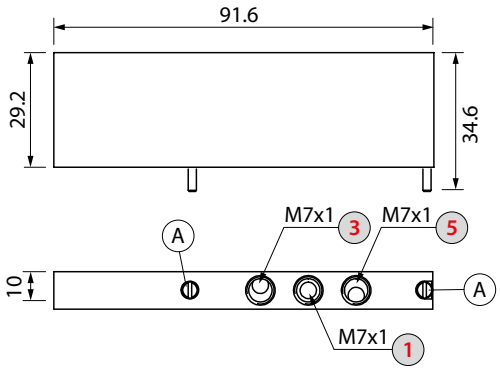

12/14	Pilot power supply

1	Air supply

3/5	Exhaust

The use of an intermediate air supply every 5 solenoid valves exhausting simultaneously is recommended to ensure maximum performance.

PNEUMATIC BASE WITH INTEGRATED PILOTING SYSTEM

17VB0

BI-STABLE BASE WITH INTEGRATED PILOTING

Code	Size (1)	Positions number	L1	L2	Weight
17VB0 04 00 0	1/8	4	4.488 (114)	4.252 (108)	1.05 lb (475g)
17VB0 06 00 0	1/8	6	5.315 (135)	5.079 (129)	1.24 lb (562g)
17VB0 08 00 0	1/8	8	6.142 (156)	5.906 (150)	1.39 lb (630g)
17VB0 10 00 0	1/8	10	6.969 (177)	6.732 (171)	1.58 lb (716g)
17VB0 12 00 0	1/8	12	7.795 (198)	7.559 (192)	1.75 lb (795g)
17VB0 14 00 0	1/8	14	8.622 (219)	8.386 (213)	1.92 lb (873g)
17VB0 16 00 0	1/8	16	9.449 (240)	9.213 (234)	2.09 lb (950g)



17VB0

MULTIPLE BASE WITH INTEGRATED PILOTING

Code	Size (1)	Positions number	L1	L2	Weight
17VB0 24 00 1	1/8	BIS.8 POS.+ MONO.16 POS	12.756 (324)	12.520 (318)	2.80 lb (1270g)
Mono-stable positions can mount mono-stable 5/2 valves only					
The first 8 positions are the bi-stable ones					



17VB0

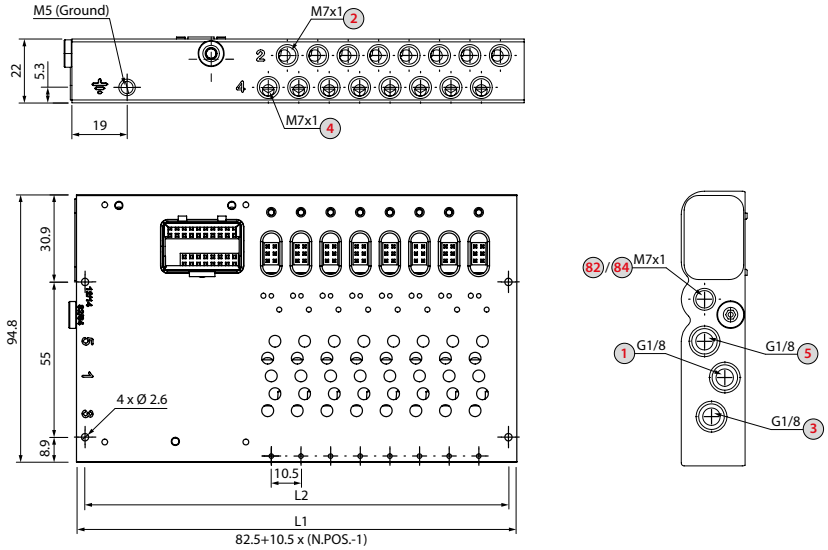

1	Power supply	3/5	Exhaust	2/4	Outputs	82/84	Air pilot exhausts

17V17

SEPARATE PILOTING PLUG



Code	Screw tightening torque	Weight
17V 17 0 00 00	0.6 N	0.01 lb (2.3g)

17V18

SEPARATING PLUG



Code	Screw tightening torque	Weight
17V 18 0 00 00	0.4 N	0.003 lb (1.4g)

17V 17 0 00 00

Replace the 3015 plug with the "separate pilot plug"

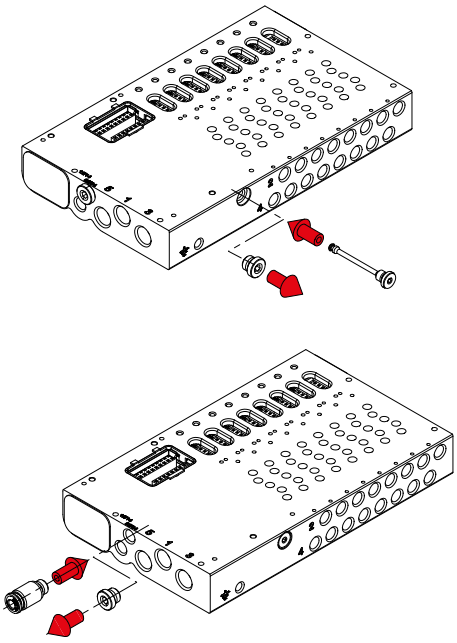

Replace the 3015 plug with a fitting to feed the pilot

17V 18 0 00 00

Insert the separating plug

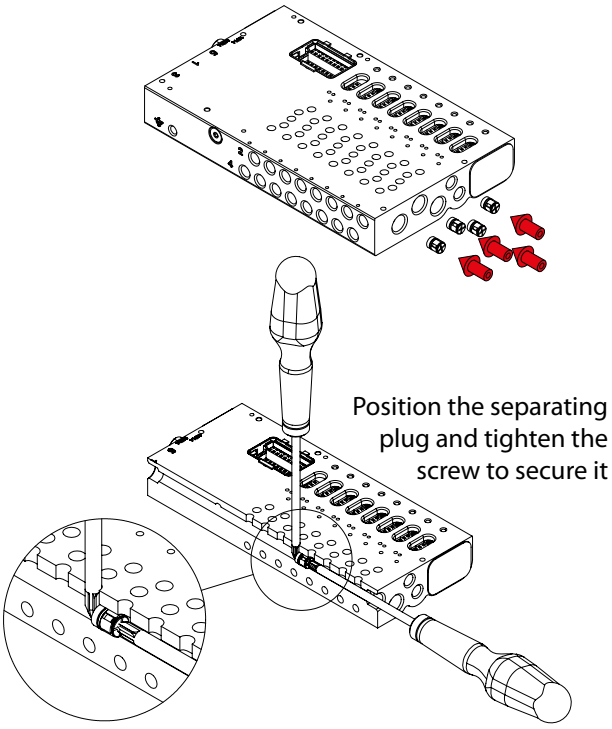

Position the separating plug and tighten the screw to secure it

POWER SUPPLY UNIT

16V17

POWER SUPPLY UNIT / D-SUB 25 PINS



Code	Weight
16V 17 00 00 1	0.13 lb (60g)

16V 17 00 00 1

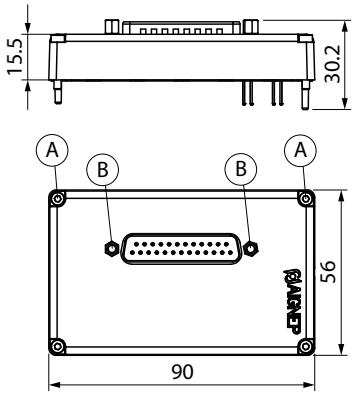

Screw tightening torque for fixing the component to the base

(A) 0.6 Nm

Screw tightening torque for fixing the component to connector

(B) 0.2 Nm

D-SUB 25 PINS

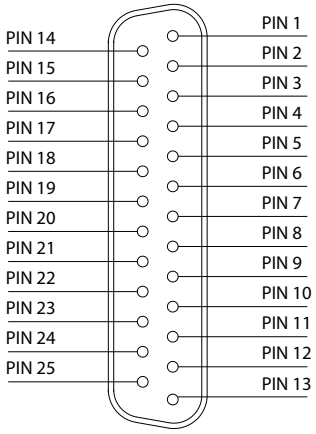

1 - 12	*positive signals PNP*
14 - 25	*positive signals PNP*
13	*0V common*

POWER SUPPLY UNIT

16V16

POWER SUPPLY UNIT / D-SUB 37 PINS



Code	Weight
16V 16 00 00 1	0.14 lb (64g)

16V 16 00 00 1

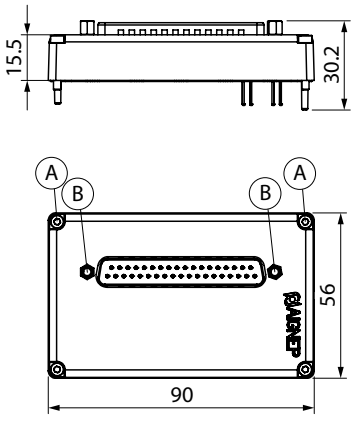

Screw tightening torque for fixing the component to the base

(A) 0.6 Nm

Screw tightening torque for fixing the component to connector

(B) 0.2 Nm

D-SUB 37 PINS

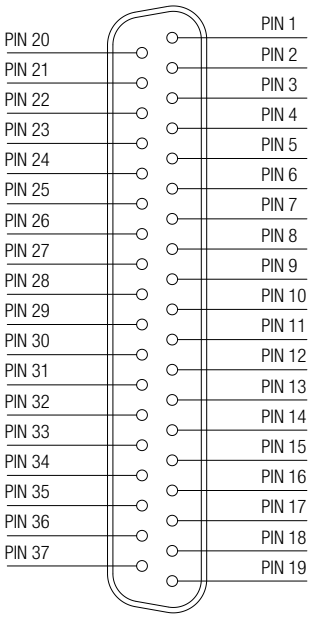

1 - 16	*positive signals PNP*
20 - 35	*positive signals PNP*
17 - 18 - 19 36 - 37	*0V common*

PIN CONFIGURATION FOR MIXED SOLENOID VALVE CONFIGURATION MOUNTED ON A BI-STABLE BASE

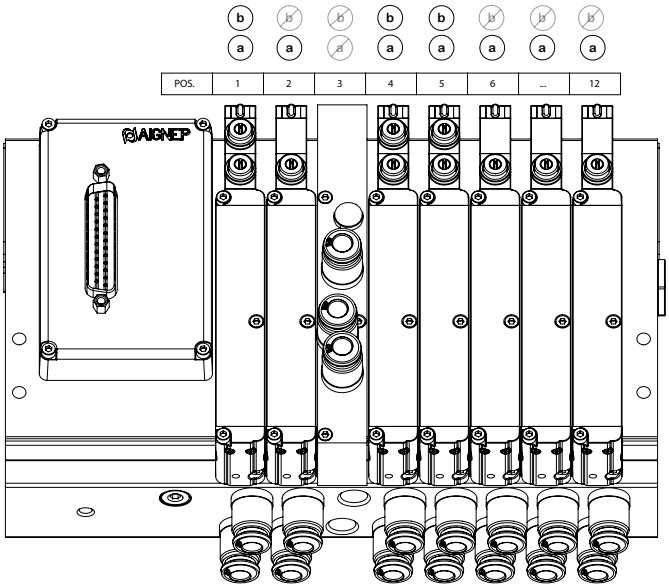

D-SUB 25 PINS

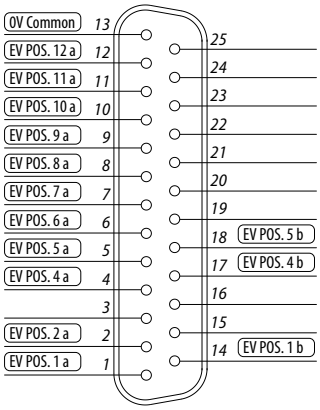

a = 14
b = 12

PIN CONFIGURATION FOR MIXED SOLENOID VALVE CONFIGURATION MOUNTED ON A BI-STABLE BASE

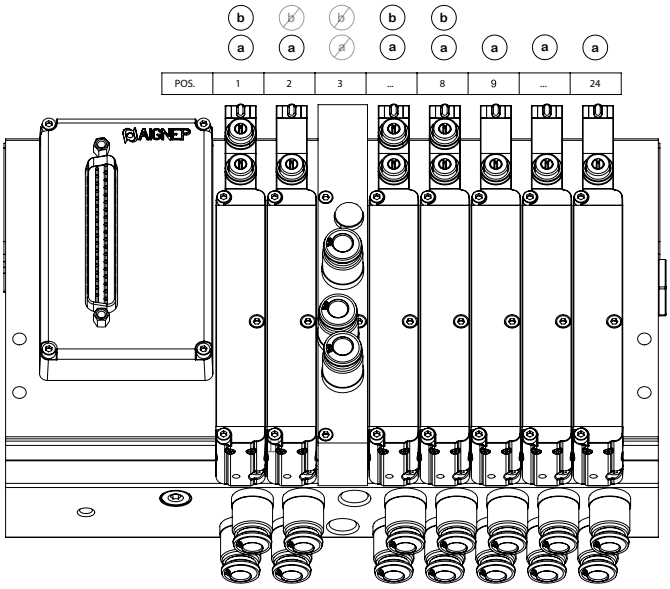

D-SUB 37 PINS

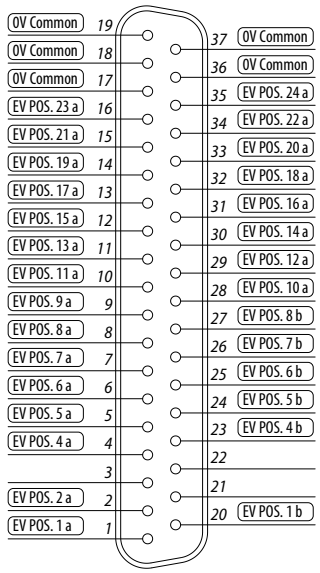

a = 14
b = 12

PIN CONFIGURATION FOR MIXED SOLENOID VALVE CONFIGURATION MOUNTED ON A MULTIPLE BASE

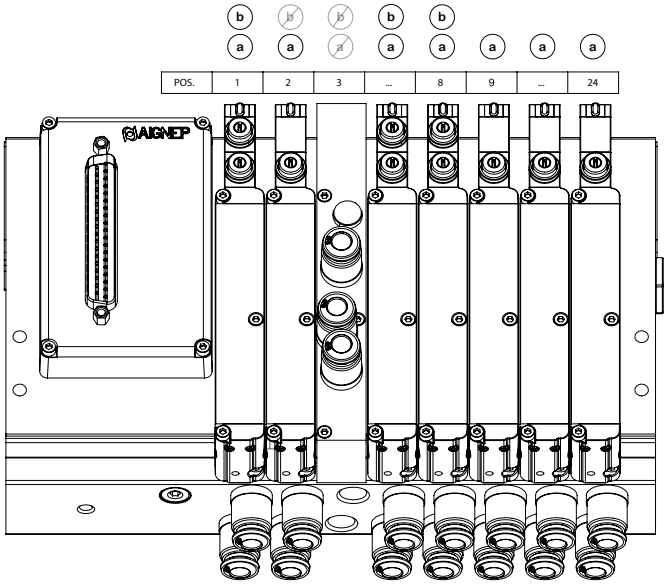

D-SUB 37 PINS

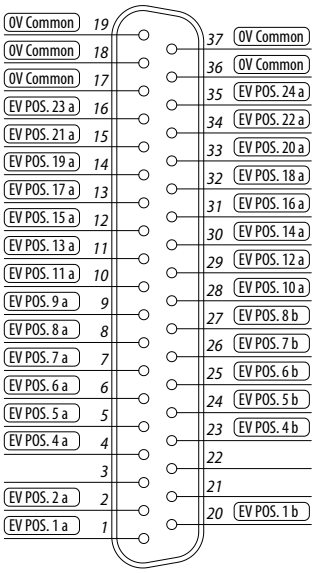

a = 14
b = 12

ETHERNET/IP — POWER MULTI-POLE CONNECTOR

16VU1

POWER MULTI-POLE CONNECTOR

Code	Weight
16V U1 00 00 0	0.79 lb (358g)



Screw tightening torque for fixing the component to the base

(B) 0.5 Nm

Screw tightening torque for fixing the component to connector

(C) 0.4 Nm

16V U1 0 00 00

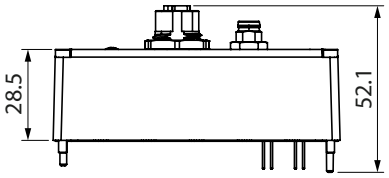

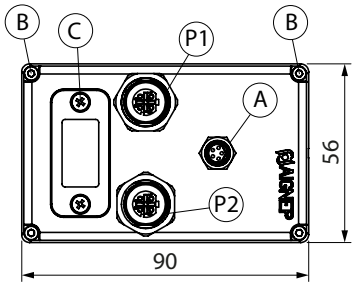

CONFIGURATION M8 MULTI-POLE CONNECTOR

Nr. Pin	Description	Wire colors Phoenix
1	**A** + 24Vdc *Valve power supply*	BN
2	**A** + 24Vdc *Node power supply*	WH
3	**A** 0V	BU
4	**A** 0V	BK
5	*Unused*	GY

Node and valve power supplies are internally connected.

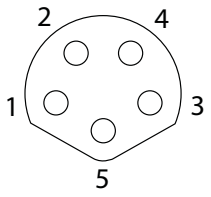

A

CONFIGURATION MULTI-POLE CONNECTORS - FEMALE

Nr. Pin	Description
1	TX +
2	RX +
3	TX -
4	RX -
NUT	*Shield*

An internal switch is supported to allow the choice of communication way. The second one is suitable to use for extend the BUS in a next core.

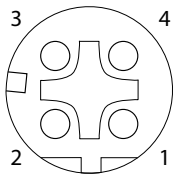

P1 - P2

ETHERNET/IP		
A Power supply	Power connection	M8 Male connector
	Voltage	+24Vdc +/-10%
	Node consumption (without outputs)	50mA
	Maximum allowable consumption	2A
OUT Outlet	PNP outlet equivalent	+24Vdc +/-10%
	Maximum current for output	300 mA
	Maximum output number	32
	Max output simultaneously actuated	32
Configuration file		**Available on the web site http://www.aignep.com**

DIAGNOSTIC LEDS

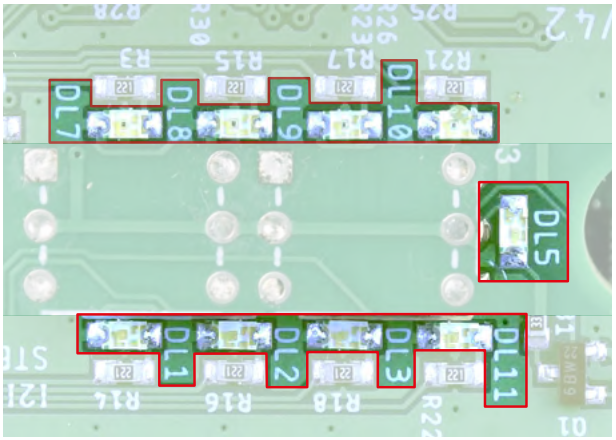

ETHERNET/IP				
Network	Network connections	2 M12 4P connectors male-female D-Type		
	Baud rate	100 Mbps		
	Default Address	192.168.250.70		
	Volume addresses	4 byte (EV1 ~ EV32)		
	Max nodes number	255		
	16V Diagnosis	Green DL5 LED: Always flashes in normal operation, off or permanently on in the event of a fault		
		Port 1 - Active operation	LED DL1: Green flashing	LED DL3: Steady green / LED DL11: Steady green
		Port 2 - Active operation	LED DL2: Green flashing	LED DL3: Steady green / LED DL11: Steady green
		IP address not set	LED DL1: Green flashing every second	LED DL3: Green flashing every second
		Communication cable not connected	LED DL3: Green flashing	
		Communication cable connected to disconnected	LED DL3: Green flashing	LED DL10: Red flashing
	IP enclosure	IP67 when assembled		
	Ambient temperature	32 °F ÷ 122 °F (0 °C ÷ 50 °C)		

PROFINET — POWER MULTI-POLE CONNECTOR

16VU2

POWER MULTI-POLE CONNECTOR

Code	Weight
16V U2 00 00 0	0.79 lb (358g)



Screw tightening torque for fixing the component to the base

(B) 0.5 Nm

Screw tightening torque for fixing the component to connector

(C) 0.4 Nm

16V U2 0 00 00

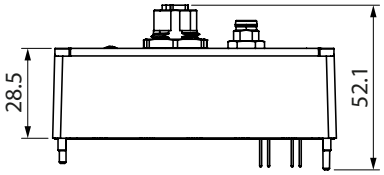

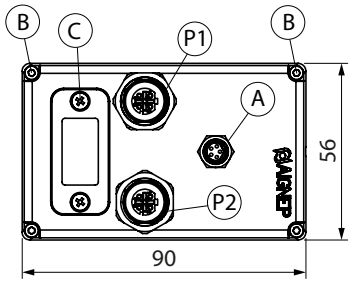

CONFIGURATION M8 MULTI-POLE CONNECTOR

Nr. Pin	Description	Wire colors Phoenix
1	**A** + 24Vdc *Valve power supply*	BN
2	**A** + 24Vdc *Node power supply*	WH
3	**A** 0V	BU
4	**A** 0V	BK
5	*Unused*	GY

Node and valve power supplies are internally connected.

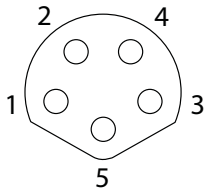

A

CONFIGURATION MULTI-POLE CONNECTORS - FEMALE

Nr. Pin	Description
1	TX +
2	RX +
3	TX -
4	RX -
NUT	*Shield*

An internal switch is supported to allow the choice of communication way. The second one is suitable to use for extend the BUS in a next core.

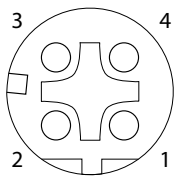

P1 - P2

PROFINET		
A Power supply	Power connection	M8 Male connector
	Voltage	+24Vdc +/-10%
	Node consumption (without outputs)	50mA
	Maximum allowable consumption	2A
OUT Outlet	PNP outlet equivalent	+24Vdc +/-10%
	Maximum current for output	300 mA
	Maximum output number	32
	Max output simultaneously actuated	32
Configuration file		**Available on the web site http://www.aignep.com**

DIAGNOSTIC LEDS

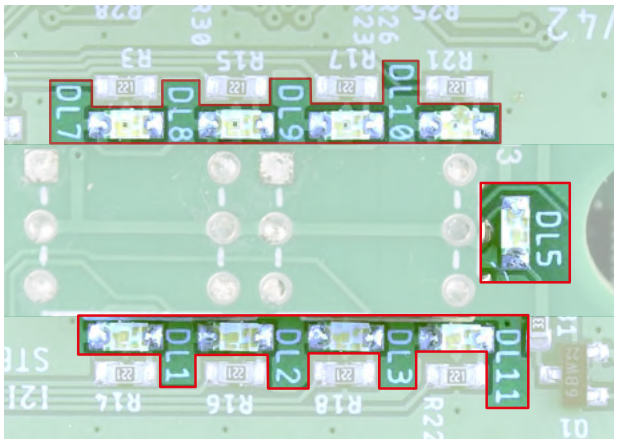

	PROFINET						
Network	Network connections	2 M12 4P connectors male-female D-Type					
	Baud rate	100 Mbps					
	PROFINET default name	serie16v					
	Default IP address	192.168.250.80					
	Volume addresses	4 byte (EV1 ~ EV32)					
	Max nodes number	255					
	16V Diagnosis	Green DL5 LED: Always flashes in normal operation, off or permanently on in the event of a fault					
		DL9 red: Status of Internal connection module : it switches in case of system fault					
		Waiting commands	LED DL1 (If connect port 1): Green flashing	LED DL2 (If connect port 2): Green flashing	LED DL3: Steady green	LED DL11: Green flashing	LED DL10: Off
		Active communication	LED DL1 (If connect port 1): Green flashing	LED DL2 (If connect port 2): Green flashing	LED DL3: Steady green	LED DL11: Steady green	LED DL10: Off
		IP address not set	LED DL1 (If connect port 1): Green flashing	LED DL2 (If connect port 2): Green flashing	LED DL3: Steady green	LED DL11: Off	LED DL10: Red flashing
		Communication cable not connected	LED DL1 (If connect port 1): Off	LED DL2 (If connect port 2): Off	LED DL3: Steady green	LED DL11: Off	LED DL10: Off
	IP enclosure	IP67 when assembled					
	Ambient temperature	32 °F ÷ 122 °F (0 °C ÷ 50°C)					

ETHERCAT — POWER MULTI-POLE CONNECTOR

16VU3

POWER MULTI-POLE CONNECTOR

Code	Weight
16V U3 00 00 0	0.79 lb (358g)



Screw tightening torque for fixing the component to the base

(B) 0.5 Nm

Screw tightening torque for fixing the component to connector

(C) 0.4 Nm

16V U3 0 00 00

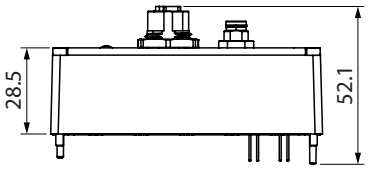

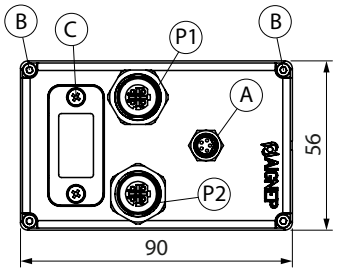

CONFIGURATION M8 MULTI-POLE CONNECTOR

Nr. Pin	Description	Wire colors Phoenix
1	**A** + 24Vdc *Valve power supply*	BN
2	**A** + 24Vdc *Node power supply*	WH
3	**A** 0V	BU
4	**A** 0V	BK
5	*Unused*	GY

Node and valve power supplies are internally connected.

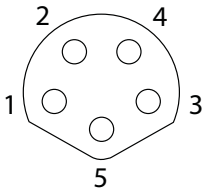

A

CONFIGURATION MULTI-POLE CONNECTORS - FEMALE

Nr. Pin	P1 (IN)	P2 (OUT)
1	TX +	TX +
2	RX +	RX +
3	TX -	TX -
4	RX -	RX -
NUT	*Shield*	*Shield*

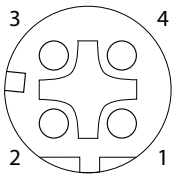

P1 - P2

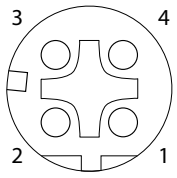

P2 (OUT)

EtherCAT		
A **Power supply**	Power connection	M8 Male connector
	Voltage	+24Vdc +/-10%
	Node consumption (without outputs)	50mA
	Maximum allowable consumption	2A
OUT **Outlet**	PNP outlet equivalent	+24Vdc +/-10%
	Maximum current for output	300 mA
	Maximum output number	32
	Max output simultaneously actuated	32
Configuration file		Available on the web site http://www.aignep.com

DIAGNOSTIC LEDS

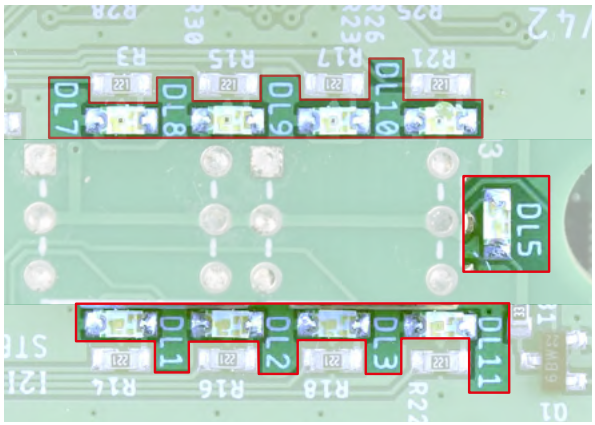

EtherCAT				
Network	Network connections	2 M12 4P connectors male-female D-Type		
	Baud rate	100 Mbps		
	Default Address	192.168.250.70		
	Volume addresses	4 byte (EV1 ~ EV32)		
	Max nodes number	255		
	16V Diagnosis	Green DL5 LED: Always flashes in normal operation, off or permanently on in the event of a fault		
		Port 1 - Active operation	LED DL1: Fast green flashing	LED DL11: Steady green
		Communication cable not connected	ALL LED: Off	
		Communication cable connected to disconnected	LED DL9: Red flashing (2:1)	LED DL1: Green flashing
	IP enclosure	IP67 when assembled		
	Ambient temperature	32 °F ÷ 122 °F (0 °C ÷ 50°C)		

POWERLINK — POWER MULTI-POLE CONNECTOR

16VU4

POWER MULTI-POLE CONNECTOR

Code	Weight
16V U4 00 00 0	0.79 lb (358g)



Screw tightening torque for fixing the component to the base

(B) 0.5 Nm

Screw tightening torque for fixing the component to connector

(C) 0.4 Nm

16V U4 0 00 00

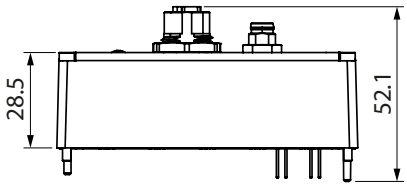

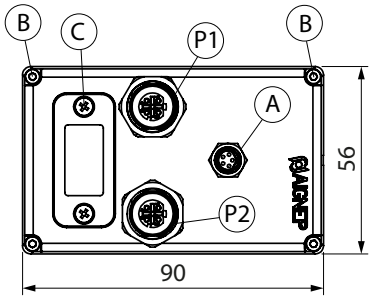

CONFIGURATION M8 MULTI-POLE CONNECTOR

Nr. Pin	Description	Wire colors Phoenix
1	**A** + 24Vdc *Valve power supply*	BN
2	**A** + 24Vdc *Node power supply*	WH
3	**A** 0V	BU
4	**A** 0V	BK
5	*Unused*	GY

Node and valve power supplies are internally connected.

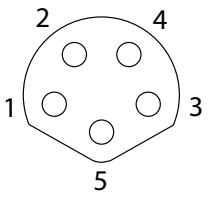

A

CONFIGURATION MULTI-POLE CONNECTORS - FEMALE

Nr. Pin	Description
1	TX +
2	RX +
3	TX -
4	RX -
NUT	*Shield*

A internal switch is supported to allow the choice of communication way. The second one is suitable to use for extend the BUS in a next core.

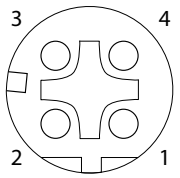

P1 - P2

PowerLink		
A Power supply	Power connection	M8 Male connector
	Voltage	+24Vdc +/-10%
	Node consumption (without outputs)	50mA
	Maximum allowable consumption	2A
OUT Outlet	PNP outlet equivalent	+24Vdc +/-10%
	Maximum current for output	300 mA
	Maximum output number	32
	Max output simultaneously actuated	32
Configuration file		Available on the web site http://www.aignep.com

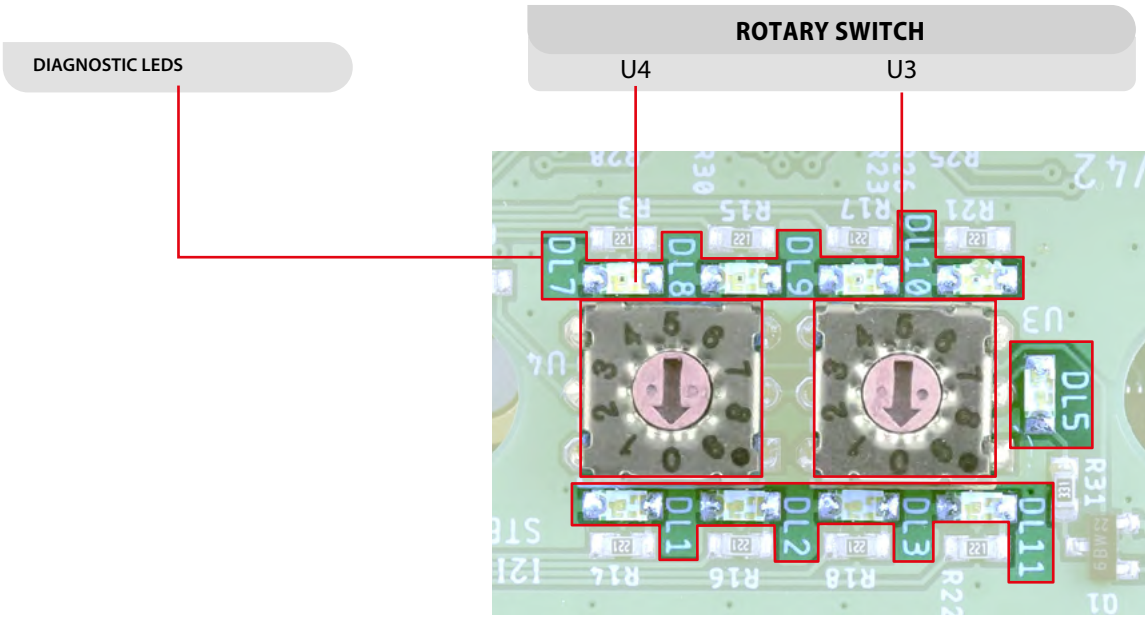

PowerLink					
Network	Network connections	2 M12 4P connectors male-female D-Type			
	Baud rate	100 Mbps			
	Default Address	192.168.250.70			
	Volume addresses	4 byte (EV1 ~ EV32)			
	Max nodes number	99			
	Adressing	Rotary switches U4-U3			
	16V Diagnosis	Green DL5 LED: Always flashes in normal operation, off or permanently on in the event of a fault			
		Port 1 - Active operation	LED DL1: Green flashing	LED DL11: Steady green	
		Port 2 - Active operation	LED DL2: Green flashing	LED DL11: Steady green	
		Incorrect node	LED DL1: Fast green flashing	LED DL2: Fast green flashing	LED DL11: Green flashing (2:1)
		Communication cable not connected	LED DL11: Fast green flashing		
		Communication cable connected to disconnected	LED DL9: Steady Red	LED DL11: Green flashing	
IP enclosure		IP67 when assembled		Ambient temperature	32 °F ÷ 122 °F (0 °C ÷ 50°C)

IO-LINK
IO-LINK NETWORK INTERFACE

16VW3

NETWORK INTERFACE IO-LINK



Code	Cable Length	Power connection	Jacket Material
16V W3 00 00 2	1.97 ft (0.6 m)	M12 x 1	PUR



16V W3 00 00 2

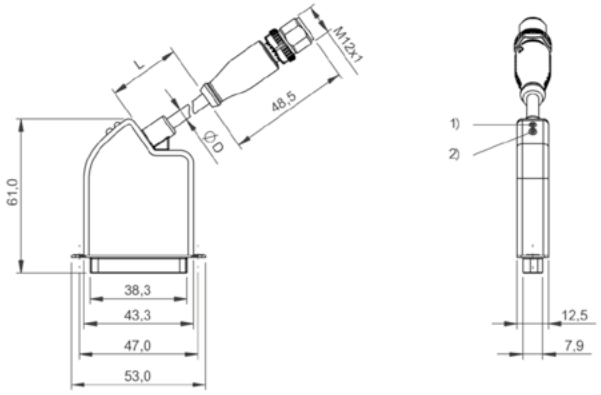

CONFIGURATION M8 MULTI-POLE CONNECTOR

Nr. Pin	Description
1	+ 24Vdc Controller
2	+ 24Vdc *Valve power supply*
3	0V
4	IO-Link
5	*Unused*

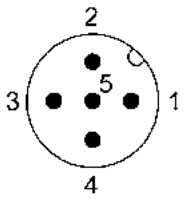

Node and valve power supplies are internally connected.

CONFIGURATION MULTI-POLE CONNECTORS - FEMALE

Nr. Pin	Description
1 - 12	Outputs
13	0V
14 - 25	Outputs



	Network connections	Cylinder head screw M2.6 x 7.6
	Electrical connections	M12x1 - D-sub (25 Poli)
	Conductors	0.34 mm²
	Current consumption without load	60 mA
	Summable current UA actuator / US sensor	4 A / 4 A
	IO-Link function	Device
	Operating voltage UB / Nominal Ue DC	24 VDC ± 10%
	Degree of protection	IP40
	Ambient/storage temperature	23 °F ÷ 131 °F (-5 °C ÷ 55 °C) / -13 °F ÷ 158 °F (-25 °C ÷ 70 °C)
Network	Process cycle data min. / Process data OUT	3.5 ms / 4 bytes
	Cycle times Min.	3.5 ms
	Transfer speed	COM2 (38.4 kBaud)
	Version	IO/LINK 1.1
	Actuator power supply indicator UA / Modules / IO-Link	Green LED
	Power supply indicator Modules	Green LED
	IO-Link power indicator	Green LED
Configuration file		Available on the web site http://www.aignep.com

D-SUB 25 PINS — CABLE WITH INLINE CONNECTOR

16VW1

D-SUB 25-POLE CABLE WITH INLINE CONNECTOR



Code	Cable Length	Jacket Material
16V W1 05 00 0	16.40 ft (5 m)	PVC
16V W1 10 00 0	32.81 ft (10 m)	PVC

D-SUB 25 PINS

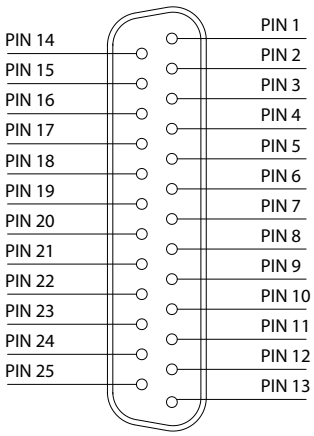

1 - 12	*positive signals PNP*
14 - 25	*positive signals PNP*
13	*0V common*

D-SUB 37 PINS — CABLE WITH INLINE CONNECTOR

15VW1

D-SUB 37-POLE CABLE WITH INLINE CONNECTOR



Code	Cable Length	Jacket Material
15V W1 05 00 0	16.40 ft (5 m)	PVC
15V W1 10 00 0	32.81 ft (10 m)	PVC

D-SUB 37 PINS

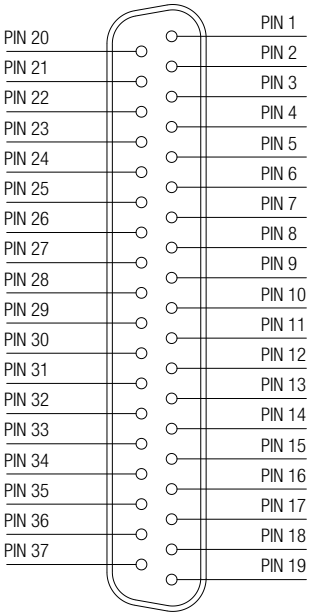

1 - 16	*positive signals PNP*
20 - 35	*positive signals PNP*
17 - 18 - 19 36 - 37	*0V common*

POWER AND COMMUNICATION CABLES

16VW2

ETHERNET/IP, PROFINET, ETHERCAT, AND POWERLINK CABLE WITH INLINE FEMALE CONNECTOR M8X1

Code	Cable Length	Jacket Material
16V W2 05 00 0	16.40 ft (5 m)	PUR
16V W2 10 00 0	32.81 ft (10 m)	PUR

	max
Torque specifications ring	0.4 Nm



16VW2

ETHERNET/IP, PROFINET, ETHERCAT, AND POWERLINK CABLE WITH "L" FEMALE CONNECTOR M8X1

Code	Cable Length	Jacket Material
16V W2 05 00 1	16.40 ft (5 m)	PUR
16V W2 10 00 1	32.81 ft (10 m)	PUR

	max
Torque specifications ring	0.4 Nm



16V W2 05 00 0 - 16V W2 10 00 0

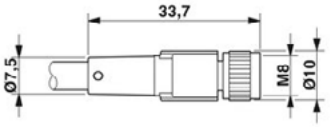

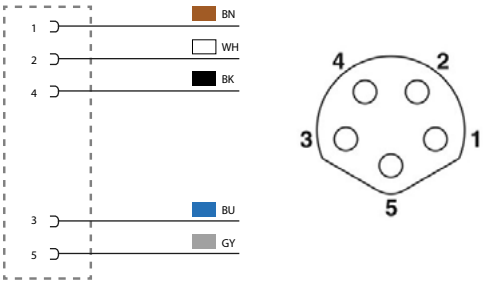

16V W2 05 00 1 - 16V W2 10 00 1

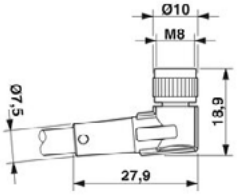

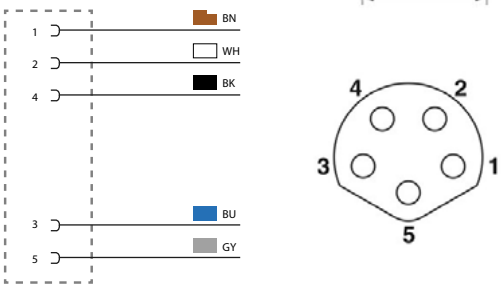

15VW5

ETHERNET/IP, PROFINET, ETHERCAT, AND POWERLINK CABLE WITH INLINE MALE CONNECTOR M12X1

Code	Cable Length	Jacket Material
15V W5 05 00 0	16.40 ft (5 m)	PUR
15V W5 10 00 0	32.81 ft (10 m)	PUR

	max
Torque specifications ring	0.6 Nm



15VW5

ETHERNET/IP, PROFINET, ETHERCAT, AND POWERLINK CABLE WITH 90° ANGLE MALE CONNECTOR M12X1

Code	Cable Length	Jacket Material
15V W5 05 00 1	16.40 ft (5 m)	PUR
15V W5 10 00 1	32.81 ft (10 m)	PUR

	max
Torque specifications ring	0.6 Nm

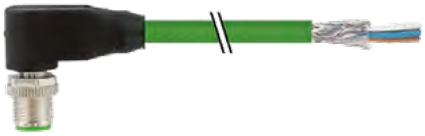

15V W5 05 00 0 - 15V W5 10 00 0

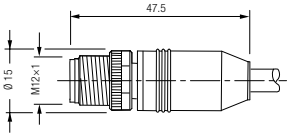

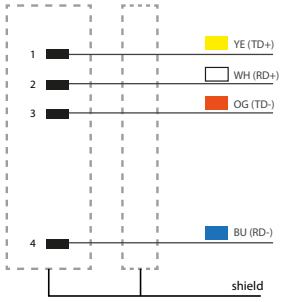

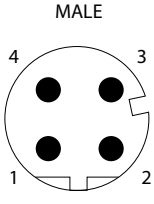

15V W5 05 00 1 - 15V W5 10 00 1

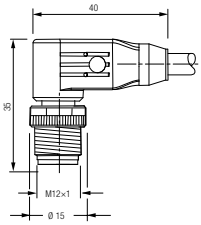

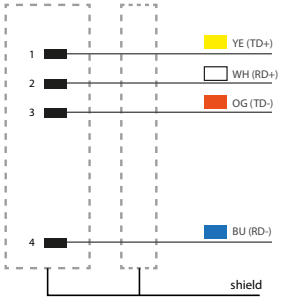

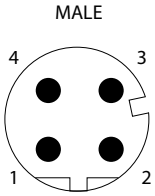

15VW6

ETHERNET/IP, PROFINET, ETHERCAT, AND POWERLINK CABLE WITH INLINE MALE - MALE CONNECTORS M12X1

Code	Cable Length	Jacket Material
15V W6 05 00 0	16.40 ft (5 m)	PUR

	max
Torque specifications ring	0.6 Nm



15VW6

ETHERNET/IP, PROFINET, ETHERCAT, AND POWERLINK CABLE WITH 90° ANGLE MALE-MALE CONNECTORS M12X1

Code	Cable Length	Jacket Material
15V W6 05 00 1	16.40 ft (5 m)	PUR

	max
Torque specifications ring	0.6 Nm



15V W6 05 00 0

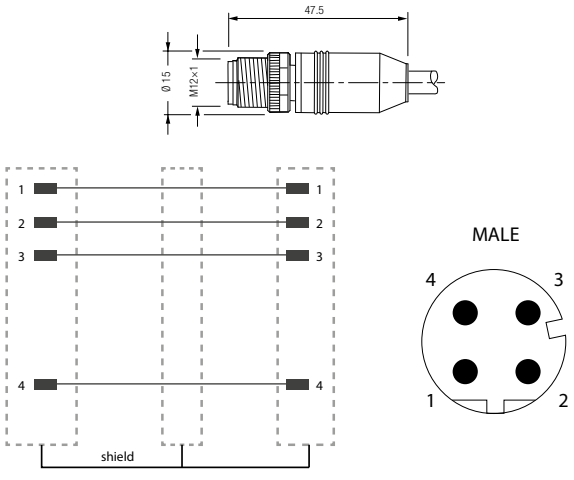

15V W6 05 00 1

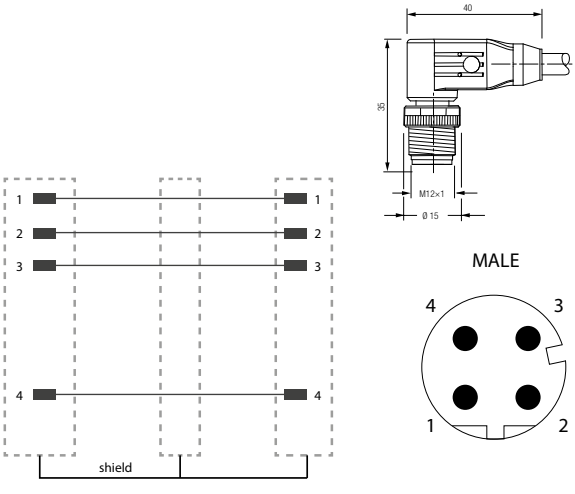

ACCESSORIES

50010N

BSP

STRAIGHT MALE ADAPTOR (PARALLEL)
WITH HEXAGON EMBEDDED



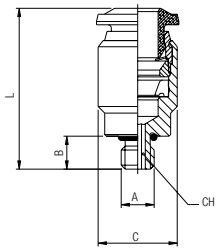

Code	Usa Ref	Tube	A	B	C	L	CH	Pack.
50010 00 N09	50010N-4-M7X1	5/32 (4)	M7x1	.189 (4.8)	.394 (10)	.827 (21)	.098 (2.5)	10

50015N

BSP

STRAIGHT MALE ADAPTOR (PARALLEL)
WITH HEXAGON EMBEDDED



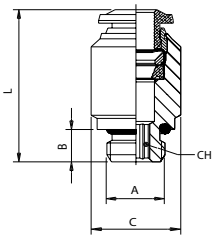

Code	Usa Ref	Tube	A	B	C	L	CH	Pack.
50015 00 N03	50015-6-1/8	6	1/8	.213 (5.4)	.504 (12.8)	.906 (23)	.157 (4)	10
50015 00 N04	50015-8-1/8	5/16 (8)	1/8	.213 (5.4)	.551 (14)	1.024 (26)	.197 (5)	10
50015 00 N12	50015-10-1/4	10	1/4	.280 (7.1)	.669 (17)	1.220 (31)	.236 (6)	10

87010

SWIFTFIT Universal thread

STRAIGHT MALE
WITH INTERNAL HEX



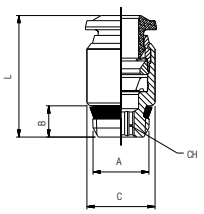

Code	Usa Ref	Tube	A	B	C	L	CH	Pack
87010 00 005	87010-04-02	1/4	1/8	.217 (5.5)	.472 (12)	.846 (21.5)	.157 (4)	10

55010

SWIFTFIT Universal thread

STRAIGHT MALE ADAPTOR
WITH HEXAGON EMBEDDED



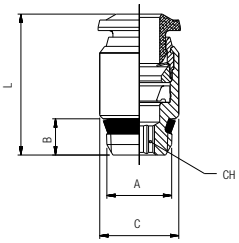

Code	Usa Ref	Tube	A	B	C	L	CH	Pack.
55010 00 004	50010N-8-1/8	5/16 (8)	1/8	.217 (5.5)	.551 (14)	.984 (25)	.197 (5)	10

56010

BSP

STRAIGHT MALE ADAPTOR (PARALLEL) WITH HEXAGON EMBEDDED



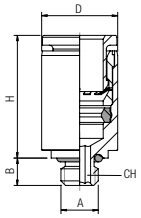

Code	Usa Ref	Tube	A	B	H	D	CH	Pack.
56010 00 001	56010-4-M5	5/32 (4)	M5	.142 (3.6)	.551 (14)	.335 (8.5)	.098 (2.5)	10
56010 00 004	56010-6-M7	6	M7	.197 (5)	.630 (16)	.394 (10)	.157 (4)	10

50610

POLYAMIDE PLUG



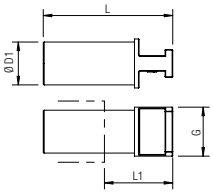

Code	Usa Ref	ØD1	G	L	L1	Pack.
50610 00 31 X1 RO	50610-4	5/32 (4)	.236 (6)	1.161 (29.5)	.610 (15.5)	10
50610 00 31 X4 RO	50610-6	6	.315 (8)	1.260 (32)	.610 (15.5)	10
50610 00 31 X7 RO	50610-8	5/16 (8)	.394 (10)	1.461 (37.1)	.768 (19.5)	10
50610 00 31 X9 RO	50610-10	10	.472 (12)	1.575 (40)	.768 (19.5)	10

55140

PLUG-IN ELBOW



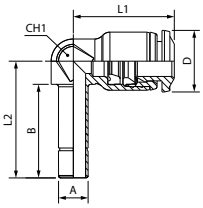

Code	Usa Ref	Tube	A	B	L1	L2	CH1	D	Pack.
55140 00 002	55140-4-6	5/32 (4)	6	.748 (19)	.650 (16.5)	.898 (22.8)	.276 (7)	.394 (10)	10
55140 00 005	55140-6	6	6	.748 (19)	.807 (20.5)	.933 (23.7)	.354 (9)	.492 (12.5)	10
55140 00 007	55140-8	5/16 (8)	5/16 (8)	.787 (20)	.866 (22)	1.024 (26)	.394 (10)	.551 (14)	10
55140 00 008	55140-8-10	5/16 (8)	10	.858 (21.8)	.866 (22)	1.087 (27.6)	.394 (10)	.551 (14)	10
55140 00 009	55140-10	10	10	.886 (22.5)	1.043 (26.5)	1.181 (30)	.512 (13)	.669 (17)	10

55150

LONG PLUG-IN ELBOW



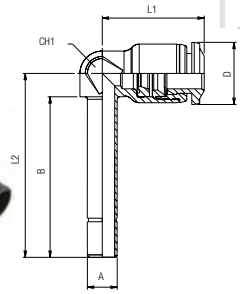

Code	Usa Ref	Tube	A	B	L1	L2	CH1	D	Pack.
55150 00 002	55150-4-6	5/32 (4)	6	1.201 (30.5)	.650 (16.5)	1.350 (34.3)	.276 (7)	.394 (10)	10
55150 00 005	55150-6	6	6	1.272 (32.3)	.807 (20.5)	1.457 (37)	.354 (9)	.492 (12.5)	10
55150 00 007	55150-8	5/16 (8)	5/16 (8)	1.417 (36)	.866 (22)	1.654 (42)	.394 (10)	.551 (14)	10
55150 00 008	55150-8-10	5/16 (8)	10	1.476 (37.5)	.866 (22)	1.697 (43.1)	.394 (10)	.551 (14)	10
55150 00 009	55150-10	10	10	1.606 (40.8)	1.043 (26.5)	1.902 (48.3)	.512 (13)	.669 (17)	10

16V46

MALE CLOSURE PLUG FOR CONNECTORS



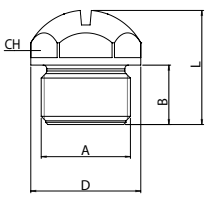

Code	A	B	L	CH	D	Pack.
16V46 00 25 NJ 00	M8X1	.236 (6)	.472 (12)	.354 (9)	.472 (12)	1
16V46 00 25 RL 00	M12X1	.315 (8)	.610 (15.5)	.512 (13)	.583 (14.8)	1

ASSEMBLING 17V

A Power unit assembly on pneumatic base

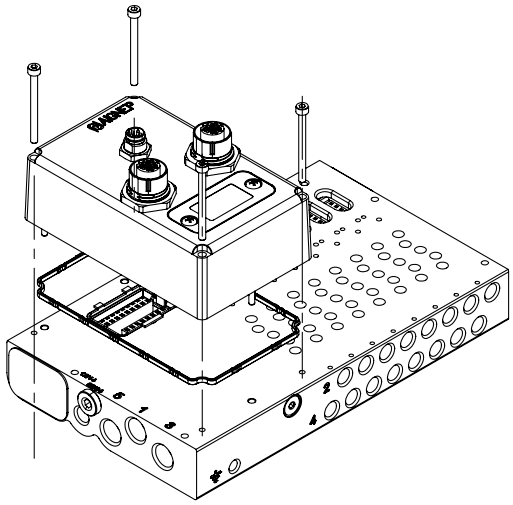

B Valve assembly on pneumatic base

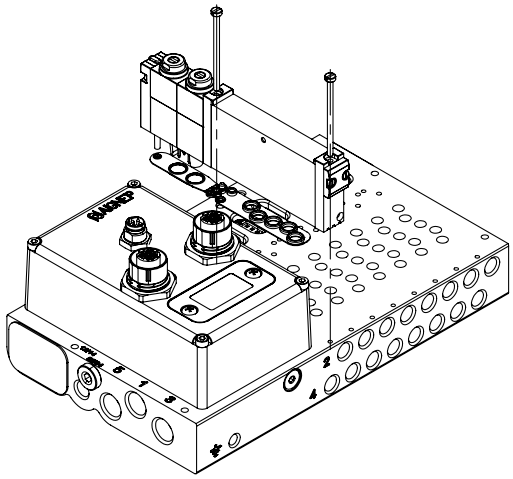

C Intermediate air supply assembly on pneumatic base

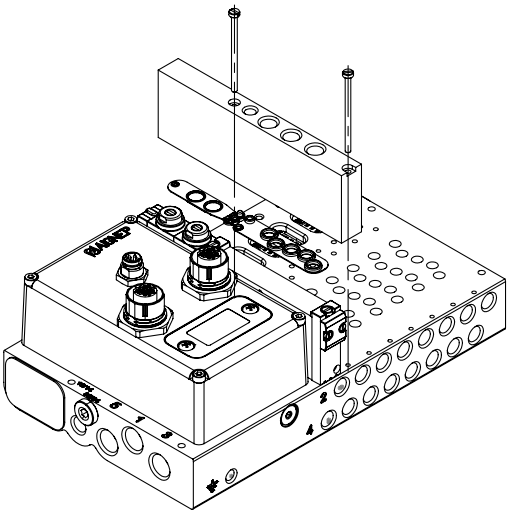

ASSEMBLING 17V

D Fixing screw distance

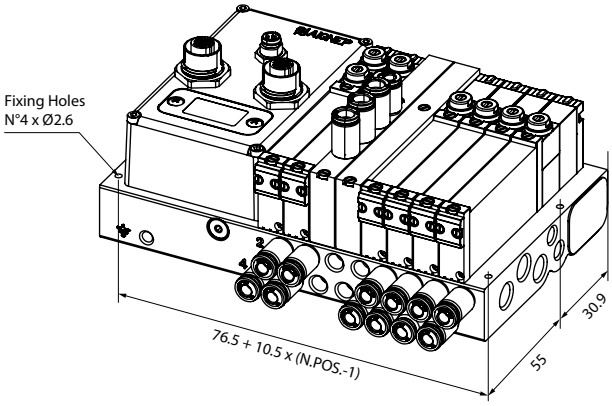

E Overall dimensions

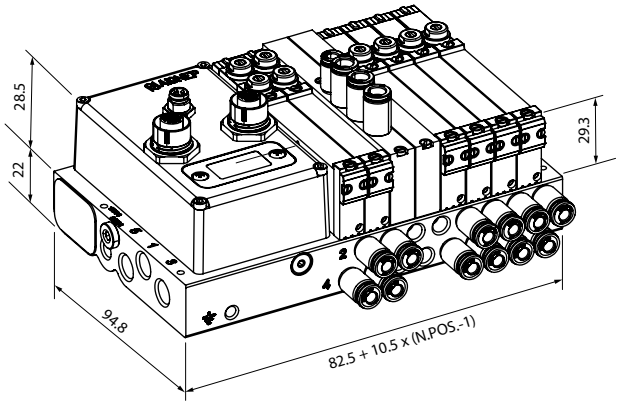

F Assembly sketch for different pressure zones

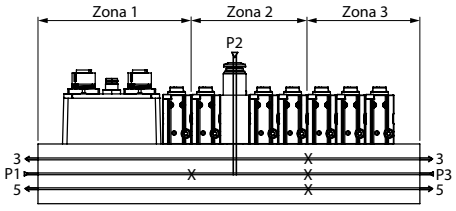

X: plug positioning for code 17V3900000

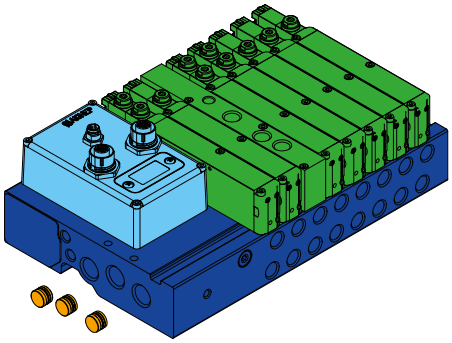

Insert the values of the boxes in the table on page 17.268 in the following columns, to configure your 17V valve.

1A	16V 17 00 00 1 *D - SUB 25 Pins*
1B	16V 16 00 00 1 *D - SUB 37 Pins*
1C	16V U1 00 00 0 Ethernet/IP
1D	16V U2 00 00 0 Profinet
1E	16V U3 00 00 0 EtherCAT
1F	16V U4 00 00 0 PowerLink

3B	17V S4 5 00 00 5/2 solenoid valve monostable pneumatic spring return
3C	17V S1 5 00 00 5/2 solenoid valve two stable positions
3D	17V S0 8 NC 00 5/4 solenoid valve monostable mechanical spring return
3E	17V S0 8 NO 00 5/4 solenoid valve monostable mechanical spring return
3F	17V S0 8 NN 00 5/4 solenoid valve monostable mechanical spring return
3G	17V S4 8 NC 00 5/4 solenoid valve monostable pneumatic spring return - NC
3H	17V S4 8 NO 00 5/4 solenoid valve monostable pneumatic spring return - NO
3I	17V S4 8 NN 00 5/4 solenoid valve monostable pneumatic spring return - NN
3J	17V 20 0 00 00 Closing Plate
3K	17V 21 0 00 00 Intermediate air supply
4A	17V 18 0 00 00 Separating plug

Bi-stable base		Bi-stable base with separate piloting	
2K	17V B0 04 000 N° 4 Positions	2P	17V B1 04 000 N° 4 Positions
2L	17V B0 06 000 N° 6 Positions	2O	17V B1 06 000 N° 6 Positions
2A	17V B0 08 000 N° 8 Positions	2F	17V B1 08 000 N° 8 Positions
2B	17V B0 10 000 N° 10 Positions	2G	17V B1 10 000 N° 10 Positions
2C	17V B0 12 000 N° 12 Positions	2H	17V B1 12 000 N° 12 Positions
2M	17V B0 14 000 N° 14 Positions	2N	17V B1 14 000 N° 14 Positions
2D	17V B0 16 000 N° 16 Positions	2I	17V B1 16 000 N° 16 Positions
Multiple base (bi + mono-stable)		Multiple base with separate piloting	
2E	17V B0 24 001 BIS.8 POS + MONO. 16 POS.	2J	17V B1 24 001 BIS.8 POS + MONO. 16 POS.

SET YOUR VALVE 17V

Power supply unit	Base
☐	☐

Valve, Closing plug, Intermediate air supply	
1° POS	☐
2° POS	☐
3° POS	☐
4° POS	☐
5° POS	☐
6° POS	☐
7° POS	☐
8° POS	☐
9° POS	☐
10° POS	☐
11° POS	☐
12° POS	☐
13° POS	☐
14° POS	☐
15° POS	☐
16° POS	☐

Valve, Closing plug, Intermediate air supply	
17° POS	☐
18° POS	☐
19° POS	☐
20° POS	☐
21° POS	☐
22° POS	☐
23° POS	☐
24° POS	☐

Separating plug
☐
☐
☐

Insert in position no. N°	Power supply 1	Exhaust 3-5	Pilot power supply
☐			
☐			
☐			

The use of intermediate pneumatic supply is recommended every 5 solenoid valves in case of simultaneous actuate output, to perform better.