AIGNEP

Valves Series

Solenoid Valves



01V
Pg. 18.3

Inox Solenoid Valves



X1V
Pg. 18.42

Solenoid Valves



07V
Pg. 18.50

Namur Solenoid Valves



08V
Pg. 18.53

Miniature Electropilots U1



AA
Pg. 18.60

Universal Valves G1/8 - G1/4



CL - CM
Pg. 18.67

Rotary Hand Lever Valves



12V
Pg. 18.96

Micro Valves



AI JET
Pg. 18.99

Micro Valves



AI JET2
Pg. 18.104

16mm Valves - Mechanical and Manual Operators



CH
Pg. 18.107

Pedal Valves



AM
Pg. 18.110

FIELDBUS Valves Series

Fieldbus Electropneumatic Valves



16V
Pg. 18.114

Fieldbus Electropneumatic Valves



17V
Pg. 18.121

ISO Valves Series

Valves ISO 5599/1 - Sizes 1 - 2 - 3 - 4



BE
Pg. 18.156

COILS & CONNECTORS Series

Solenoids and Connectors



Coils & Connectors
Pg. 18.169

Click here to view the Valves Series on our Website

AIGNEP

AIGNEP

MANUAL, PNEUMATIC, SOLENOID PILOT, FIELDBUS, AND ISO VALVES

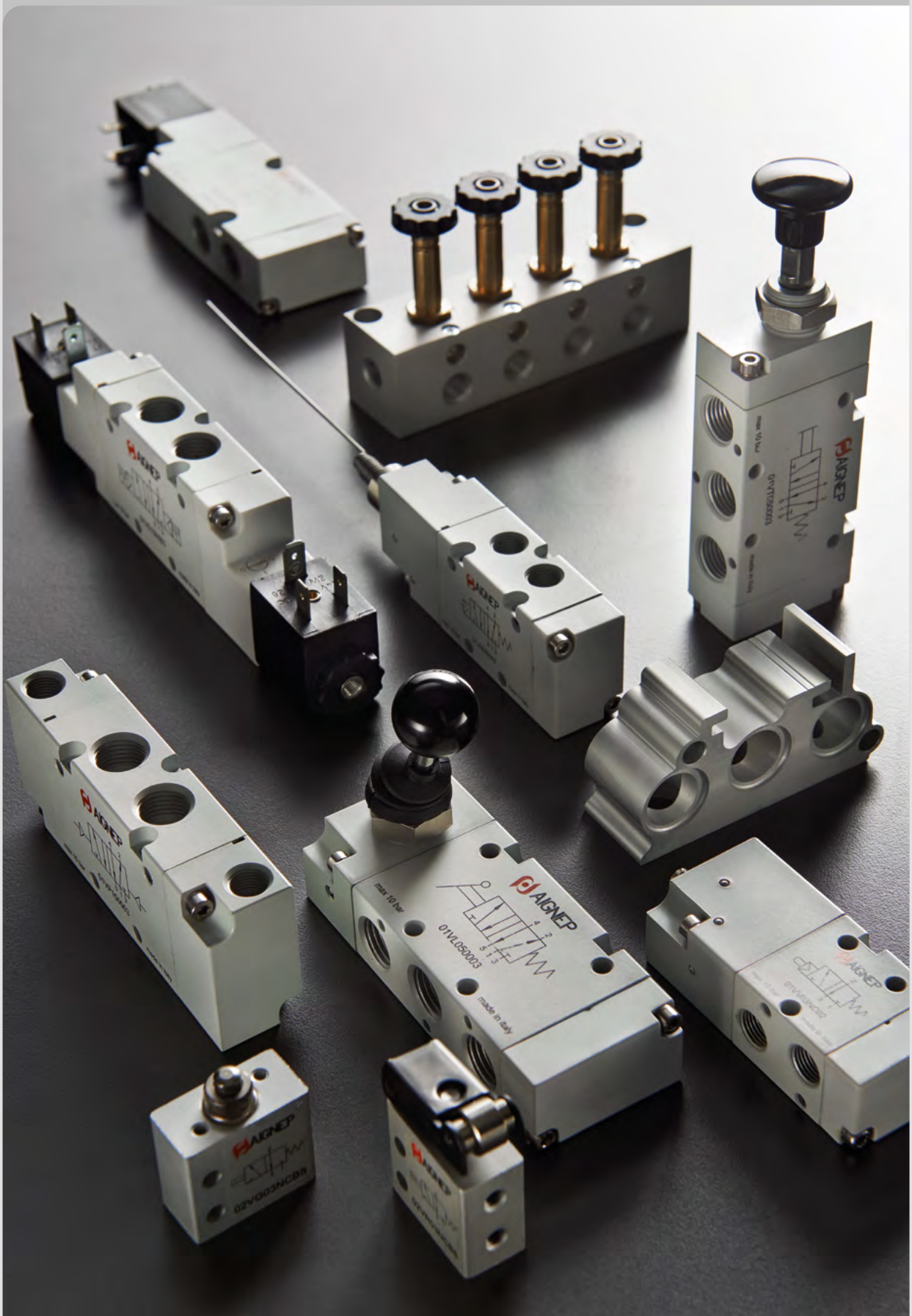

Valves Series

SERIES CH - POPPET VALVES

2/2 - 3/2 G1/8 poppet valves, main features:

- Closed centers
- High flow rate
- Quick response time
- Suitable for heavy duties and where the number of mechanical operations is high

Fluid	filtered air 50 µm, with or without lubrication,
Temperature Ambient	14 ÷ 113 °F (-10 ÷ 45 °C)
Temperature fluid	Max 122 °F (50 °C)
Commutation system	poppet
Ways/Positions	2/2 NC-NO, 3/2 NC-NO
Pressure	Max 145 psi (10 bar)
Control	manual, mechanical
Return	mechanical spring
Connections	G1/8
Nominal bore (mm)	.197 (5)
Nominal flow rate (Nl/min)	600 (NC), 550 (NO)
Valve body	zamak
Seals	NBR
Operators	galvanized steel/ technopolymer
Spool	nickel-plated brass

Reference standard

II 2Gc IIC T5 II 2Dc T100°C



3/2 NC

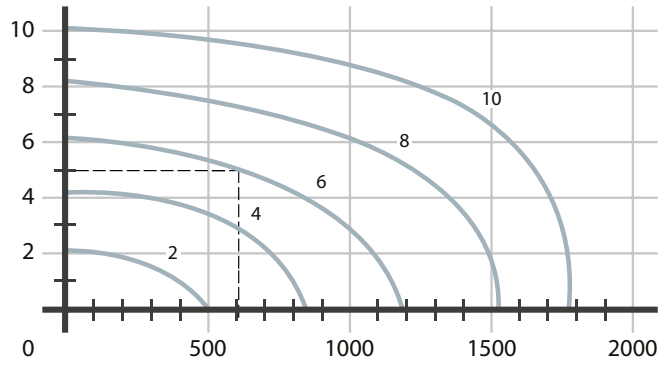

P = Working pressure
PA = Supply pressure
Qn = Flow rate

3/2 NO

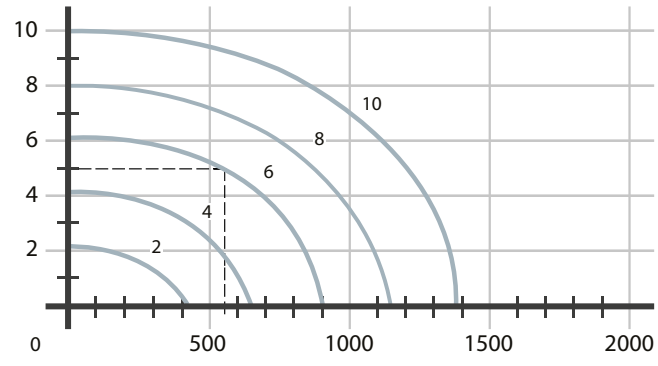

P = Working pressure
PA = Supply pressure
Qn = Flow rate

ROLLER LEVER - SPRING

Code	Way	Thread	Flow rate Nl/min	Force N	Weight lb (Kg)	
UCH 252	2/2 NC	G 1/8	600	21	0.44 (0.2)	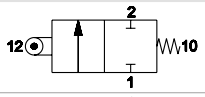
UCH 256	2/2 NO	G 1/8	550	15	0.44 (0.2)	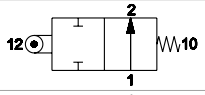
UCH 250	3/2 NC	G 1/8	600	21	0.44 (0.2)	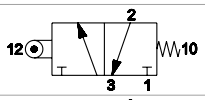
UCH 254	3/2 NO	G 1/8	550	15	0.44 (0.2)	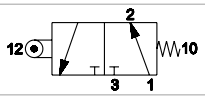



UNI-DIRECTIONAL ROLLER LEVER - SPRING

Code	Way	Thread	Flow rate Nl/min	Force N	Weight lb (Kg)	
UCH 262	2/2 NC	G 1/8	600	16	0.46 (0.21)	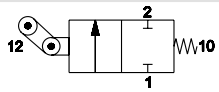
UCH 266	2/2 NO	G 1/8	550	12	0.46 (0.21)	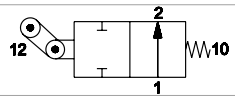
UCH 260	3/2 NC	G 1/8	600	16	0.46 (0.21)	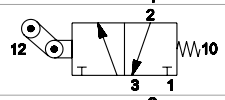
UCH 264	3/2 NO	G 1/8	550	12	0.46 (0.21)	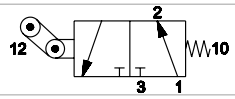



BALL-PUSH - SPRING

Code	Way	Thread	Flow rate Nl/min	Force N	Weight lb (Kg)	
UCH 272	2/2 NC	G 1/8	600	51	0.40 (0.18)	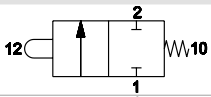
UCH 276	2/2 NO	G 1/8	550	39	0.40 (0.18)	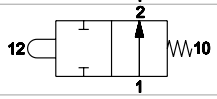
UCH 270	3/2 NC	G 1/8	600	51	0.40 (0.18)	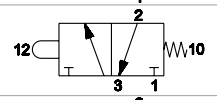
UCH 274	3/2 NO	G 1/8	550	39	0.40 (0.18)	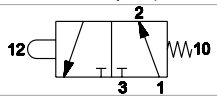



BUTTON LEVER - SPRING

Code	Way	Thread	Flow rate Nl/min	Force N	Weight lb (Kg)	
UCH 282	2/2 NC	G 1/8	600	18	0.40 (0.18)	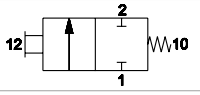
UCH 286	2/2 NO	G 1/8	550	14	0.40 (0.18)	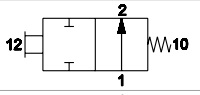
UCH 280	3/2 NC	G 1/8	600	18	0.40 (0.18)	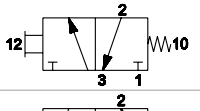
UCH 284	3/2 NO	G 1/8	550	14	0.40 (0.18)	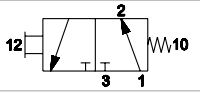



ROLLER LEVER - SPRING

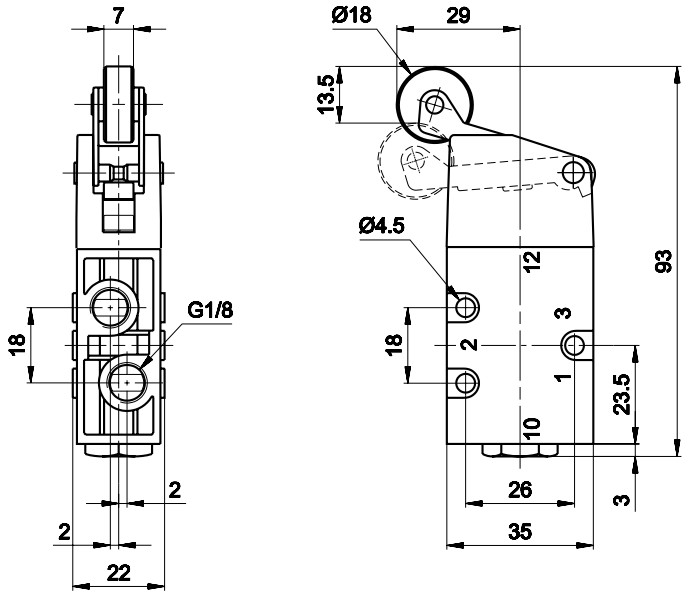

1 = Supply port
2 = Use
3 = Exhaust
4 = Control
5 = Return

UNI-DIRECTIONAL ROLLER LEVER - SPRING

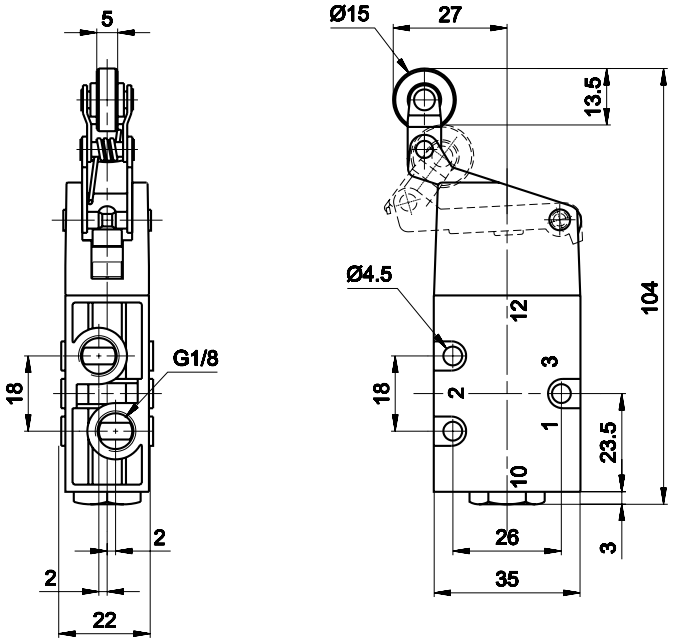

1 = Supply port
2 = Use
3 = Exhaust
4 = Control
5 = Return

BALL-PUSH - SPRING

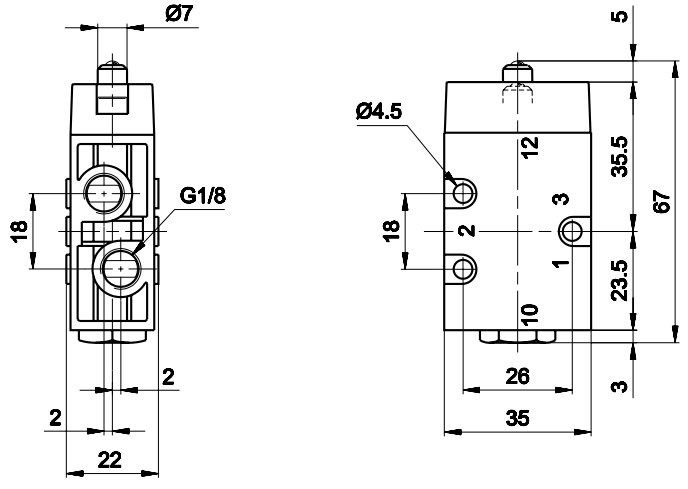

1 = Supply port
2 = Use
3 = Exhaust
4 = Control
5 = Return

BUTTON LEVER - SPRING

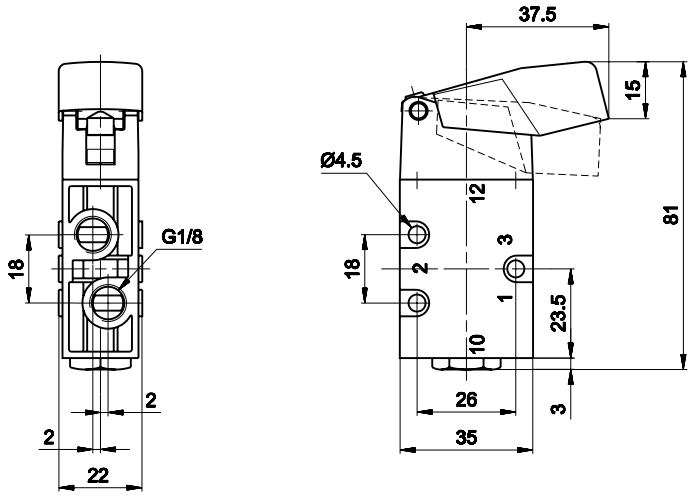

1 = Supply port
2 = Use
3 = Exhaust
4 = Control
5 = Return