AIGNEP

Valves Series

Solenoid Valves



01V

Pg. 18.3

Inox Solenoid Valves



X1V

Pg. 18.42

Solenoid Valves



07V

Pg. 18.50

Namur Solenoid Valves



08V

Pg. 18.53

Miniature Electropilots U1



AA

Pg. 18.60

Universal Valves G1/8 - G1/4



CL - CM

Pg. 18.67

Rotary Hand Lever Valves



12V

Pg. 18.96

Micro Valves



AI JET

Pg. 18.99

Micro Valves



AI JET2

Pg. 18.104

16mm Valves - Mechanical and Manual Operators



CH

Pg. 18.107

Pedal Valves



AM

Pg. 18.110

FIELDBUS Valves Series

Fieldbus Electropneumatic Valves



16V

Pg. 18.114

Fieldbus Electropneumatic Valves



17V

Pg. 18.121

ISO Valves Series

Valves ISO 5599/1 - Sizes 1 - 2 - 3 - 4



BE

Pg. 18.156

COILS & CONNECTORS Series

Solenoids and Connectors



Coils & Connectors

Pg. 18.169

Click here to view the Valves Series on our Website

AIGNEP

AIGNEP

MANUAL, PNEUMATIC, SOLENOID PILOT, FIELDBUS, AND ISO VALVES

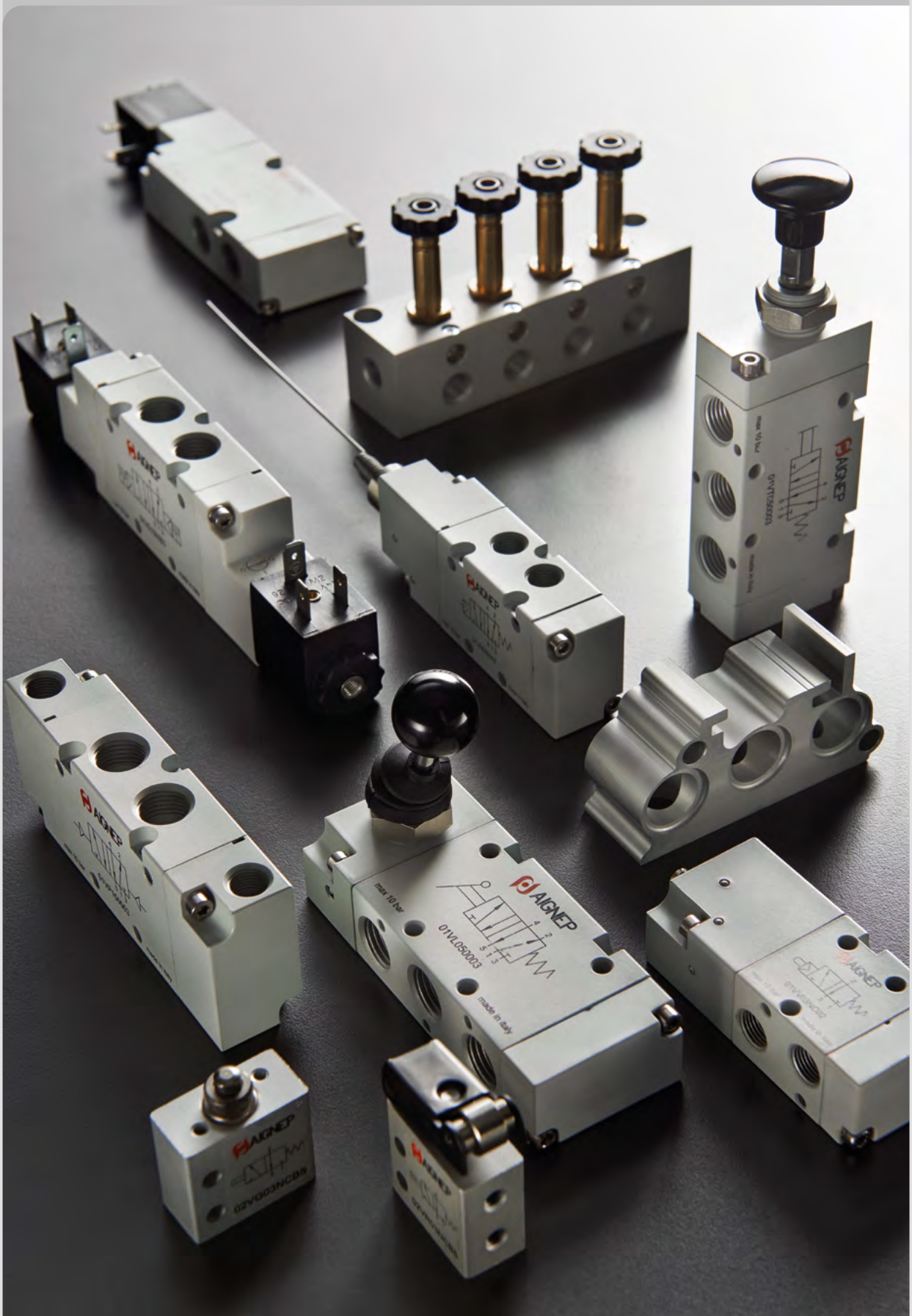

Valves Series

SERIES AI - JET2 - PANEL-MOUNTED PUSH-BUTTON VALVES 3/2 - 5/2 - 5/3

Panel-mounted push-button valves 3/2 - 5/2 - 5/3

- Compact and lightweight (reduced dimensions)
- Low actuation force and fast response time
- Push-in fitting for Ø 5/32 (Ø 4 mm) tube
- Wide range of actuators and original panel-mounted manual controls

Fluid	filtered air 50 µm, with or without lubrication
Temperature ambient	14 ÷ 194 °F (-10 ÷ 90 °C)
Temperature fluid	Max 122 °F (50 °C)
Commutation system	poppet
Ways/Positions	2/2 NC, 3/2 NC, 3/2 NO, 5/2, 5/3
Pressure	Max 145 psi (10 bar)
Control	manual, mechanical
Return	mechanical spring
Connections	tube Ø5/32 (4mm)
Nominal bore (mm)	0.098 (2.5 mm)
Nominal flow rate (Nl/min)	70Nl/min
Valve body	zamak
Seals	NBR
Spool	nickel-plated brass

Reference Standard

II 2G Ex h IIC T5 Gb

II 2D Ex h IIIC T100°C Db



FLOW RATE CHARACTERISTICS

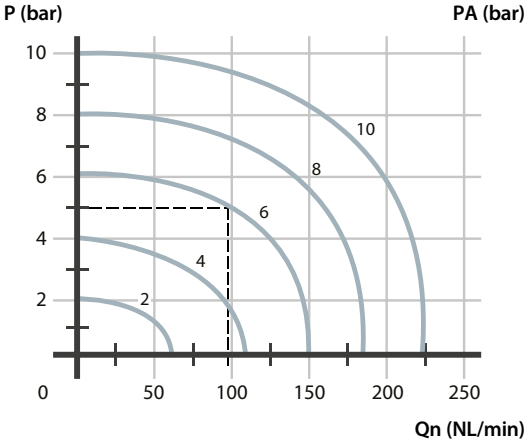

P (bar) = Working pressure
PA (bar) = Supply pressure
Qn (NL/min) = Flow rate

MECHANICAL PUSH BUTTON FOR PANEL MOUNTING - TUBE Ø5/32 (4mm)

	Code	Way	Connection	Weight lb (Kg)	
	**UAI 9500B**	3/2 NC	tubo Ø5/32 (4)	0.17 (0.075)	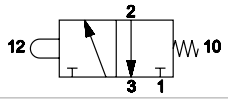
	UAI 9510B	3/2 NO	tubo Ø5/32 (4)	0.17 (0.075)	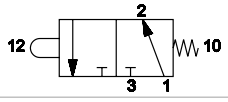
	UAI 9520B	2/2 NC	tubo Ø5/32 (4)	0.17 (0.075)	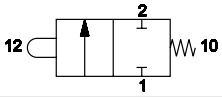
	**UAI 9550B**	5/2	tubo Ø5/32 (4)	0.33 (0.15)	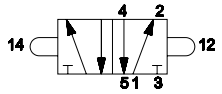
	UAI 9560B	5/3 **O.C.**	tubo Ø5/32 (4)	0.33 (0.15)	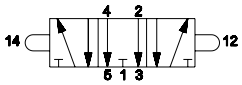
	UAI 9570B	5/3 **P.C.**	tubo Ø5/32 (4)	0.33 (0.15)	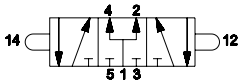

O.C. = open centers **P.C.** = pressurized centers

TUBE Ø5/32 (4mm)

2/2 - 3/2

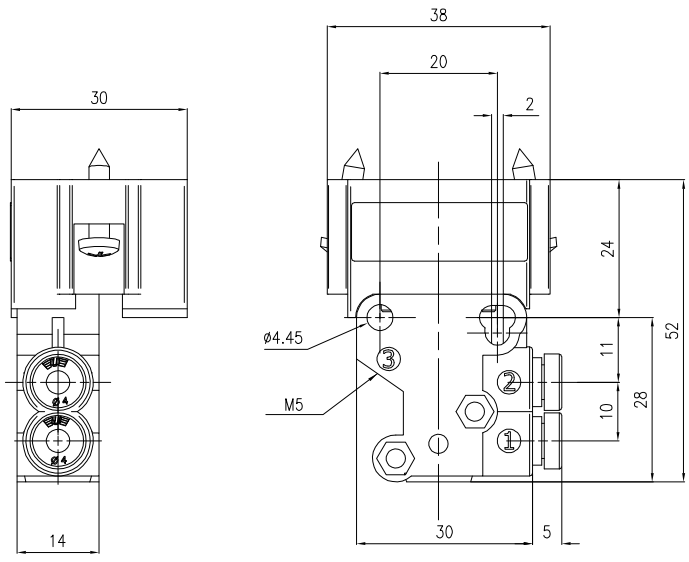

5/2 - 5/3

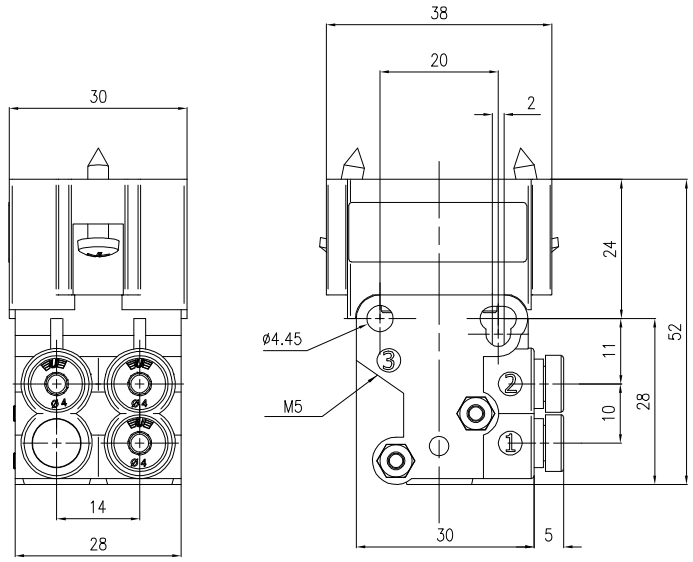

MANUAL ACTUATORS

	**UAI 35B10N**	■ BLACK	Recessed button	
	UAI 35B10R	■ RED		
	UAI 35B10V	■ GREEN		
	**UAI 35B11N**	■ BLACK	Protruding button	
	UAI 35B11R	■ RED		
	UAI 35B11V	■ GREEN		
	**UAI 35B13N**	■ BLACK	Two-position head button	
	UAI 35B13R	■ RED		
	**UAI 35B20** 2 steady positions	■ BLACK	Short lever selector	
	UAI 35B21 3 unsteady positions	■ BLACK		
	UAI 35B22 3 steady positions	■ BLACK		
	**UAI 35B25** 2 steady positions	■ BLACK	Long lever selector	
	UAI 35B26 3 unsteady positions	■ BLACK		
	UAI 35B27 3 steady positions	■ BLACK		
	**UAI 35B30** 2 steady positions	■ BLACK	Key selector	
	UAI 35B31 3 unsteady positions	■ BLACK		
	UAI 35B32 3 steady positions	■ BLACK		