AIGNEP

Valves Series

Solenoid Valves



01V

Pg. 18.3

Inox Solenoid Valves



X1V

Pg. 18.42

Solenoid Valves



07V

Pg. 18.50

Namur Solenoid Valves



08V

Pg. 18.53

Miniature Electropilots U1



AA

Pg. 18.60

Universal Valves G1/8 - G1/4



CL - CM

Pg. 18.67

Rotary Hand Lever Valves



12V

Pg. 18.96

Micro Valves



AI JET

Pg. 18.99

Micro Valves



AI JET2

Pg. 18.104

16mm Valves - Mechanical and Manual Operators



CH

Pg. 18.107

Pedal Valves



AM

Pg. 18.110

FIELDBUS Valves Series

Fieldbus Electropneumatic Valves



16V

Pg. 18.114

Fieldbus Electropneumatic Valves



17V

Pg. 18.121

ISO Valves Series

Valves ISO 5599/1 - Sizes 1 - 2 - 3 - 4



BE

Pg. 18.156

COILS & CONNECTORS Series

Solenoids and Connectors



Coils & Connectors

Pg. 18.169

Click here to view the Valves Series on our Website

AIGNEP

AIGNEP

MANUAL, PNEUMATIC, SOLENOID PILOT, FIELDBUS, AND ISO VALVES

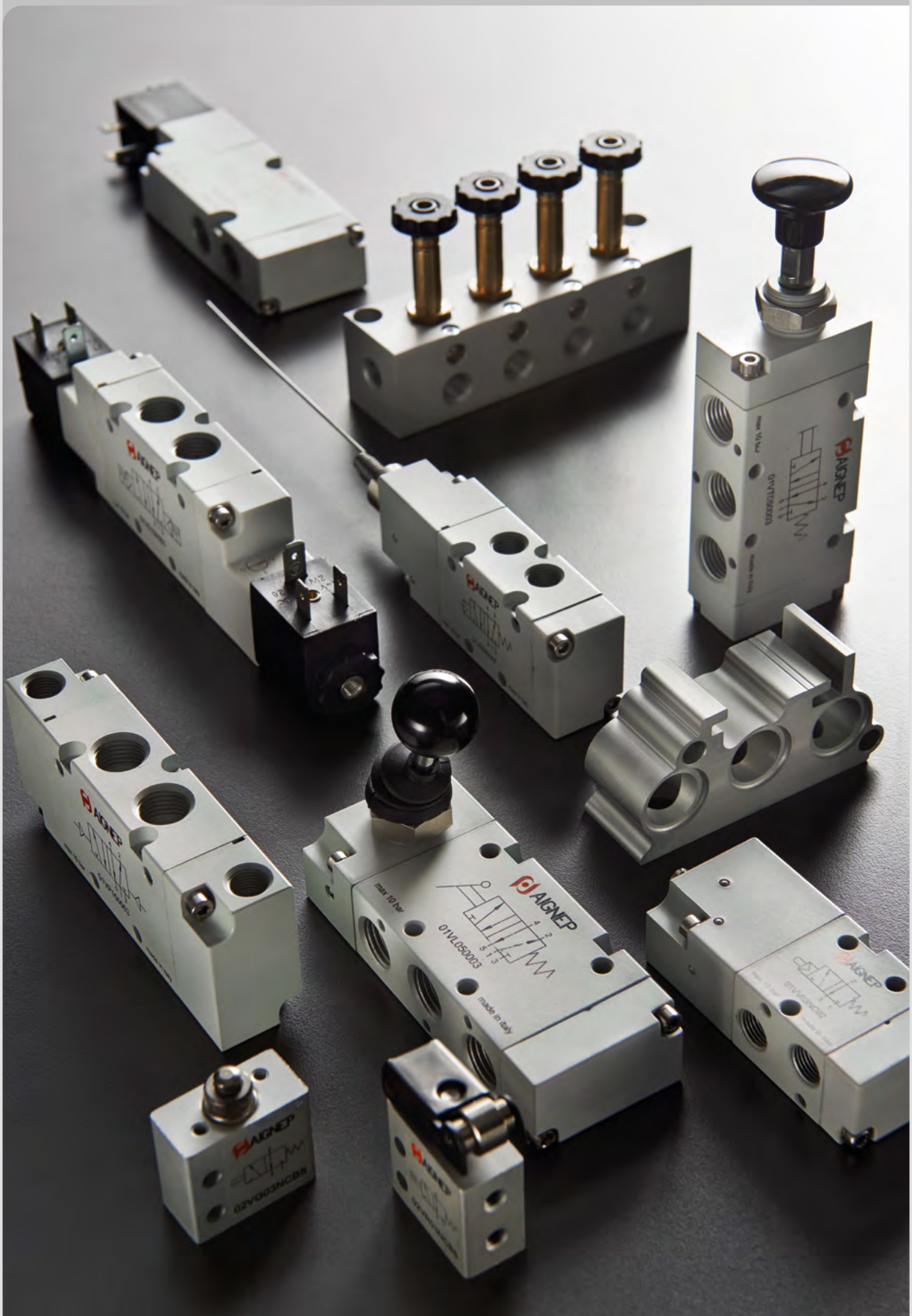

Valves Series

SERIES AI - JET - END-STROKE PNEUMATIC SERIES JET

JET series End-Stroke Pneumatic

- Compact and lightweight (reduced dimensions)
- Low actuation force and fast response time
- Push-in fitting for Ø 5/32 (Ø 4 mm) tube
- Wide range of actuators and original panel-mounted manual controls by Univer

Fluid	filtered air 50 µm, with or without lubrication
Temperature ambient	14 ÷ 194 °F (-10 ÷ 90 °C)
Temperature fluid	Max 122 °F (50 °C)
Commutation system	poppet
Ways/Positions	2/2 NC, 3/2 NC, 3/2 NO
Pressure	Max 145 psi (10 bar)
Control	manual, mechanical
Return	mechanical spring
Connections	tube Ø5/32 (4mm)
Nominal bore (mm)	0.098 (2.5 mm)
Nominal flow rate (Nl/min)	70 Nl/min
Valve body	zamak
Seals	nitrile rubber
Spool	nickel-plated brass

Reference standard

II 2G Ex h IIC T5 Gb

II 2D Ex h IIIC T100°C Db



FLOW RATE CHARACTERISTICS

P (bar) = Working pressure

PA (bar) = Supply pressure

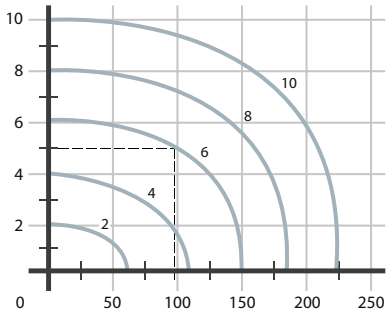

Qn (NL/min) = Flow rate

OTHER VERSIONS AVAILABLE





BALL-PUSH - SPRING

	Code	Way	Connection	Return	Force N	Weight lb (Kg)	
	UAI 9000	3/2 NC	tube Ø5/32 (4)	mechanical spring	14	0.13 (0.060)	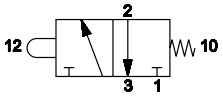
	UAI 9010	3/2 NO	tube Ø5/32 (4)	mechanical spring	14	0.13 (0.060)	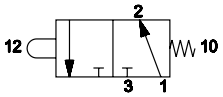
	UAI 9020	2/2 NC	tube Ø5/32 (4)	mechanical spring	14	0.13 (0.060)	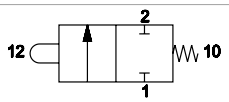

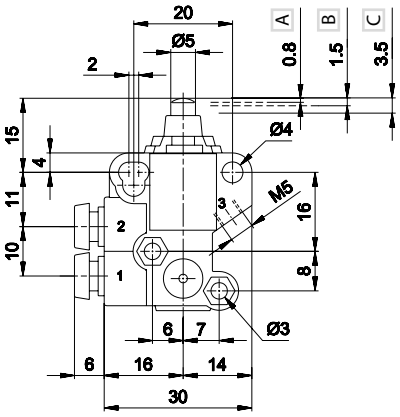

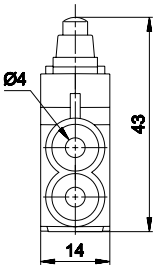

1 = Supply port

2 = Use

3 = Exhaust

A = Pre-stroke

B = Maximum opening

C = Total stroke

ROLLER LEVER - SPRING

	Code	Way	Connection	Return	Force N	Weight lb (Kg)	
	UAI 9100	3/2 NC	tube Ø5/32 (4)	mechanical spring	7	0.19 (0.085)	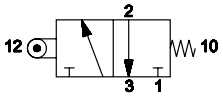
	UAI 9110	3/2 NO	tube Ø5/32 (4)	mechanical spring	7	0.19 (0.085)	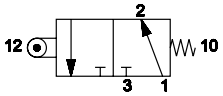
	UAI 9120	2/2 NC	tube Ø5/32 (4)	mechanical spring	7	0.19 (0.085)	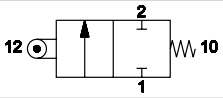

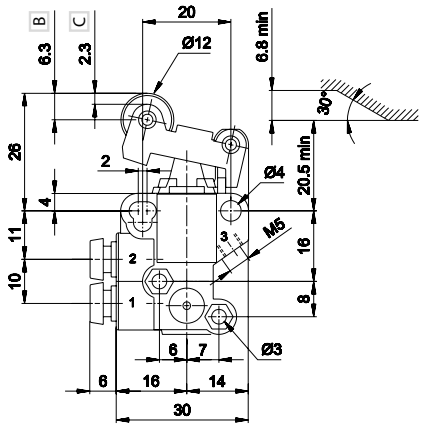

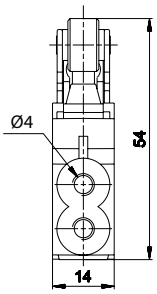

1 = Supply port

2 = Use

3 = Exhaust

B = Maximum opening

C = Total stroke

2/2 NO version available upon request.

UNI-DIRECTIONAL ROLLER LEVER - SPRING

	Code	Way	Connection	Return	Force N	Weight lb (Kg)	
	UAI 9200	3/2 NC	tube Ø5/32 (4)	mechanical spring	4	0.19 (0.085)	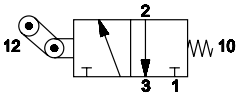
	UAI 9210	3/2 NO	tube Ø5/32 (4)	mechanical spring	4	0.19 (0.085)	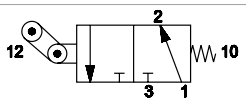
	UAI 9220	2/2 NC	tube Ø5/32 (4)	mechanical spring	4	0.19 (0.085)	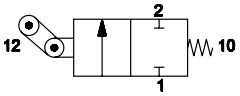

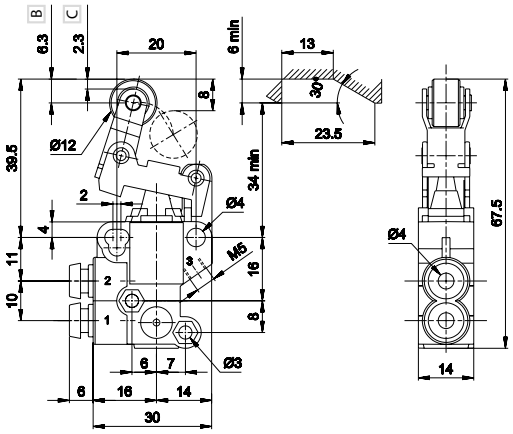

1 = Supply port

2 = Use

3 = Exhaust

B = Maximum opening

C = Total stroke

MECHANICAL PUSH BUTTON WITH SCREW MOUNTING - SPRING

	Code	Way	Connection	Return	Force N	Weight lb (Kg)	
	UAI 9300	3/2 NC	tube Ø5/32 (4)	mechanical spring	14	0.18 (0.082)	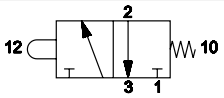
	UAI 9310	3/2 NO	tube Ø5/32 (4)	mechanical spring	14	0.18 (0.082)	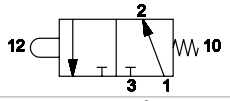
	UAI 9320	2/2 NC	tube Ø5/32 (4)	mechanical spring	14	0.18 (0.082)	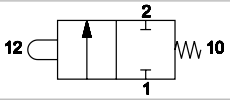

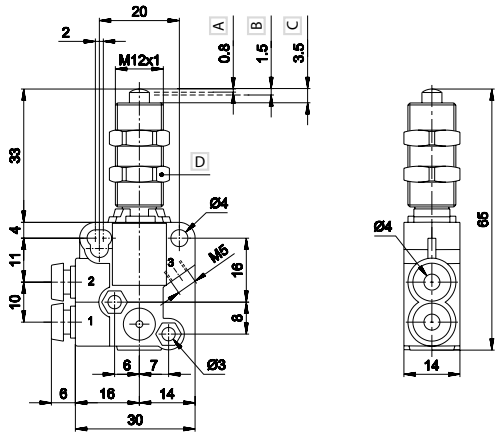

1 = Supply port

2 = Use

3 = Exhaust

A = Pre-stroke

B = Maximum opening

C = Total stroke

D = Wrench 14

2/2 NO version available upon request.

BUTTON - SPRING

	Code	Way	Connection	Return	Force N	Weight lb (Kg)	
	UAI 9350	3/2 NC	tube Ø5/32 (4)	mechanical spring	7	0.14 (0.065)	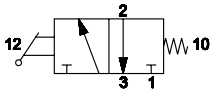
	UAI 9360	3/2 NO	tube Ø5/32 (4)	mechanical spring	7	0.14 (0.065)	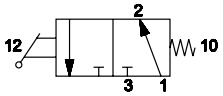
	UAI 9370	2/2 NC	tube Ø5/32 (4)	mechanical spring	7	0.14 (0.065)	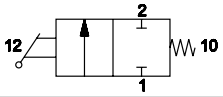

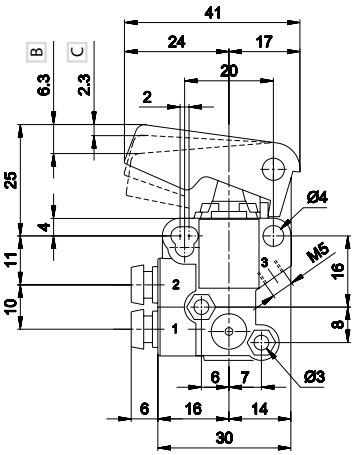

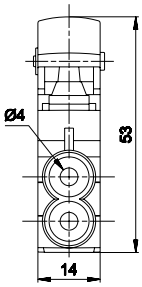

1 = Supply port

2 = Use

3 = Exhaust

B = Maximum opening

C = Total stroke

MECHANICAL PUSH BUTTON FOR PANEL MOUNTING - SPRING

	Code	Way	Connection	Return	Force N	Weight lb (Kg)	
	UAI 9400	3/2 NC	tube Ø5/32 (4)	mechanical spring	14	0.17 (0.075)	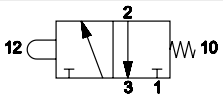
	UAI 9410	3/2 NO	tube Ø5/32 (4)	mechanical spring	14	0.17 (0.075)	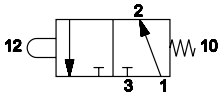
	UAI 9420	2/2 NC	tube Ø5/32 (4)	mechanical spring	14	0.17 (0.075)	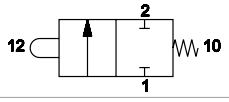

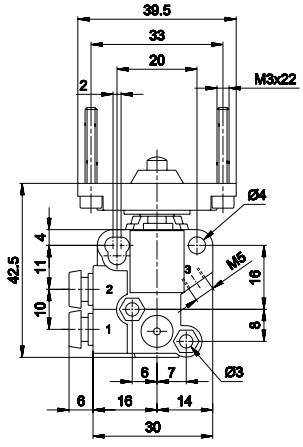

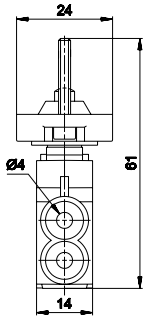

1 = Supply port

2 = Use

3 = Exhaust

2/2 NO version available upon request.

MANUAL ACTUATORS

	UAI 3511Q	■ BLACK	Recessed button	
	UAI 3512Q	■ RED		
	UAI 3513Q	■ GREEN		
	UAI 3514Q	■ RED	Head button	
	UAI 3516Q	■ BLACK		
	UAI 3514QD	■ RED		
	UAI 3516QD	■ BLACK		
	UAI 3515Q	■ GREEN	Button	
	UAI 3517Q	■ RED		
	UAI 3519Q	■ BLACK		
	UAI 3520Q	■ BLACK	Accident prevention rotating selector	
	UAI 3521Q	■ BLACK		

MANUAL ACTUATORS

	UAI 3522Q	■ BLACK	Rotating lever selector	
	UAI 3523Q	■ BLACK		
	UAI 3524Q	■ BLACK	Lever operator	
	UAI 3525Q	■ BLACK	Omni - directional operator	
	UAI 3526Q	■ BLACK	Push-pull operator	