AIGNEP

Valves Series

Solenoid Valves



01V
Pg. 18.3

Inox Solenoid Valves



X1V
Pg. 18.42

Solenoid Valves



07V
Pg. 18.50

Namur Solenoid Valves



08V
Pg. 18.53

Miniature Electropilots U1



AA
Pg. 18.60

Universal Valves G1/8 - G1/4



CL - CM
Pg. 18.67

Rotary Hand Lever Valves



12V
Pg. 18.96

Micro Valves



AI JET
Pg. 18.99

Micro Valves



AI JET2
Pg. 18.104

16mm Valves - Mechanical and Manual Operators



CH
Pg. 18.107

Pedal Valves



AM
Pg. 18.110

FIELDBUS Valves Series

Fieldbus Electropneumatic Valves



16V
Pg. 18.114

Fieldbus Electropneumatic Valves



17V
Pg. 18.121

ISO Valves Series

Valves ISO 5599/1 - Sizes 1 - 2 - 3 - 4



BE
Pg. 18.156

COILS & CONNECTORS Series

Solenoids and Connectors



Coils & Connectors
Pg. 18.169

Click here to view the Valves Series on our Website

AIGNEP

AIGNEP

MANUAL, PNEUMATIC, SOLENOID PILOT, FIELDBUS, AND ISO VALVES

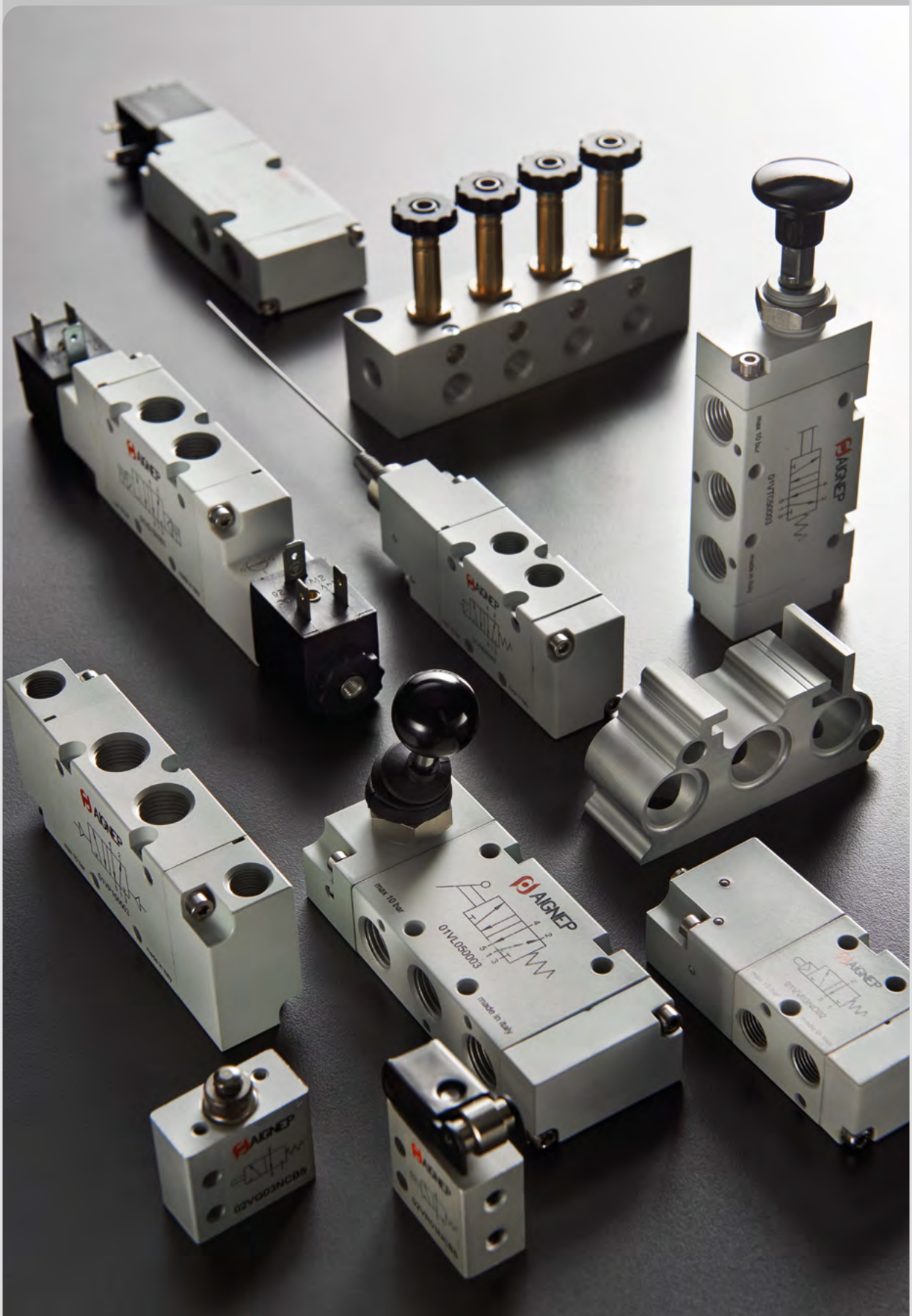

Valves Series

TECHNICAL CHARACTERISTICS



			1/4
Bar	OPERATING PRESSURE		0 ÷ 145 psi (0 ÷ 10 bar)
	TEMPERATURE	min	14 °F -10 °C
		max	140 °F 60 °C
	FUNCTION	CC	4/3 Position - Close Center
		OC	4/3 Position - Exhaust Center
		NO	4/2

Reference Standard

1907/2006 REACH

2011/65/CE RoHS

PED 2014/68/UE

Component Parts and Materials

Anodized and painted aluminum body
NBR seals

Series	Actuation	Reactuation	Ways	Function	Size
1 2 V 1	L	1	4	N O	0 2
12V1 12V2 12V3	L = Lever	1 = Bistable 2 = Stable in 3 positions	4 = 4/2 6 = 4/3	NO = Normally open CC = Center closed OC = Center exhausted	02 = G 1/8 03 = G 1/4 04 = G 3/8 05 = G 1/2 07 = G 3/4

4/2 Ways

TWO STABLE POSITIONS

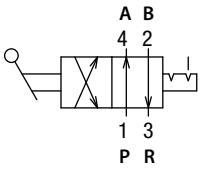

NO



Code	Ways	Function	Size	DN	Pack.
12V1 L1 4 NO 02	4/2	NO	G 1/8	.118 (3)	1
12V1 L1 4 NO 03	4/2	NO	G 1/4	.118 (3)	1
12V2 L1 4 NO 04	4/2	NO	G 3/8	.240 (6.1)	1
12V2 L1 4 NO 05	4/2	NO	G 1/2	.256 (6.5)	1
12V3 L1 4 NO 07	4/2	NO	G 3/4	.374 (9.5)	1

4/3 Ways

STABLE IN 3 POSITIONS

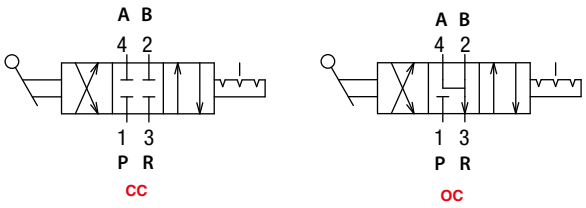



Code	Ways	Function	Size	DN	Pack.
12V1 L2 6 CC 02	4/3	CC	G 1/8	.118 (3)	1
12V1 L2 6 CC 03	4/3	CC	G 1/4	.118 (3)	1
12V2 L2 6 CC 04	4/3	CC	G 3/8	.240 (6.1)	1
12V2 L2 6 CC 05	4/3	CC	G 1/2	.256 (6.5)	1
12V3 L2 6 CC 07	4/3	CC	G 3/4	.374 (9.5)	1

Code	Ways	Function	Size	DN	Pack.
12V1 L2 6 OC 02	4/3	OC	G 1/8	.118 (3)	1
12V1 L2 6 OC 03	4/3	OC	G 1/4	.118 (3)	1
12V2 L2 6 OC 04	4/3	OC	G 3/8	.240 (6.1)	1
12V2 L2 6 OC 05	4/3	OC	G 1/2	.256 (6.5)	1
12V3 L2 6 OC 07	4/3	OC	G 3/4	.374 (9.5)	1

12V1

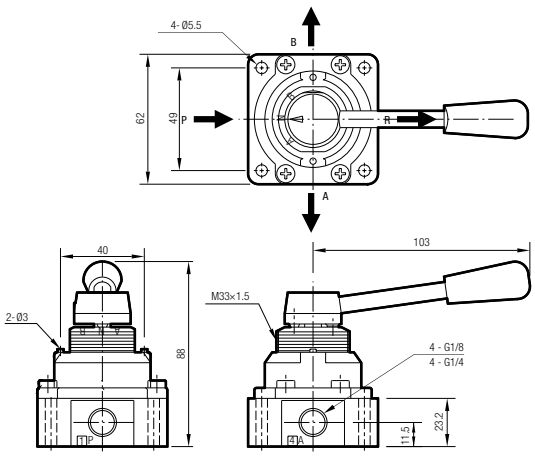

12V2

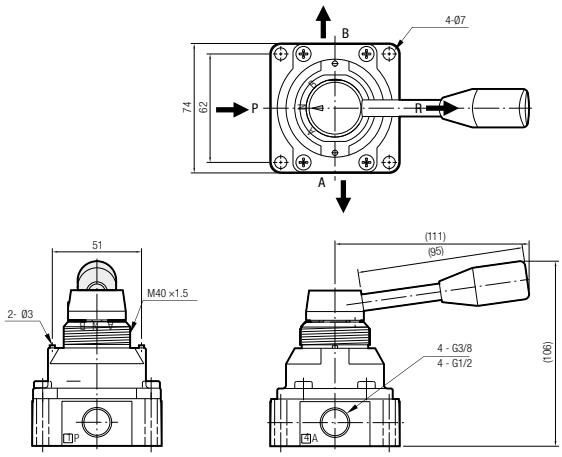

12V3

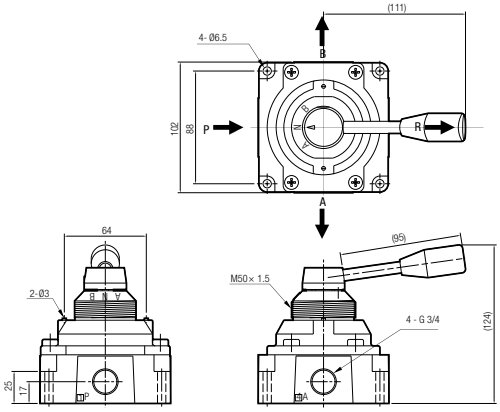

ACCESSORIES

12VL1

NUT

Code	Size	D	E	L	P	Pack.
12V1L1	G 1/8 - G 1/4	M33x1.5	.236 (6)	1.614 (41)	1.811 (46)	1
12V2L1	G 3/8 - G 1/2	M40x1.5	.236 (6)	1.969 (50)	2.244 (57)	1
12V3L1	G 3/4	M50x1.5	.315 (8)	2.165 (55)	2.480 (63)	1

