AIGNEP

Valves Series

Solenoid Valves



01V
Pg. 18.3

Inox Solenoid Valves



X1V
Pg. 18.42

Solenoid Valves



07V
Pg. 18.50

Namur Solenoid Valves



08V
Pg. 18.53

Miniature Electropilots U1



AA
Pg. 18.60

Universal Valves G1/8 - G1/4



CL - CM
Pg. 18.67

Rotary Hand Lever Valves



12V
Pg. 18.96

Micro Valves



AI JET
Pg. 18.99

Micro Valves



AI JET2
Pg. 18.104

16mm Valves - Mechanical and Manual Operators



CH
Pg. 18.107

Pedal Valves



AM
Pg. 18.110

FIELDBUS Valves Series

Fieldbus Electropneumatic Valves



16V
Pg. 18.114

Fieldbus Electropneumatic Valves



17V
Pg. 18.121

ISO Valves Series

Valves ISO 5599/1 - Sizes 1 - 2 - 3 - 4



BE
Pg. 18.156

COILS & CONNECTORS Series

Solenoids and Connectors



Coils & Connectors
Pg. 18.169

Click here to view the Valves Series on our Website

AIGNEP

AIGNEP

MANUAL, PNEUMATIC, SOLENOID PILOT, FIELDBUS, AND ISO VALVES

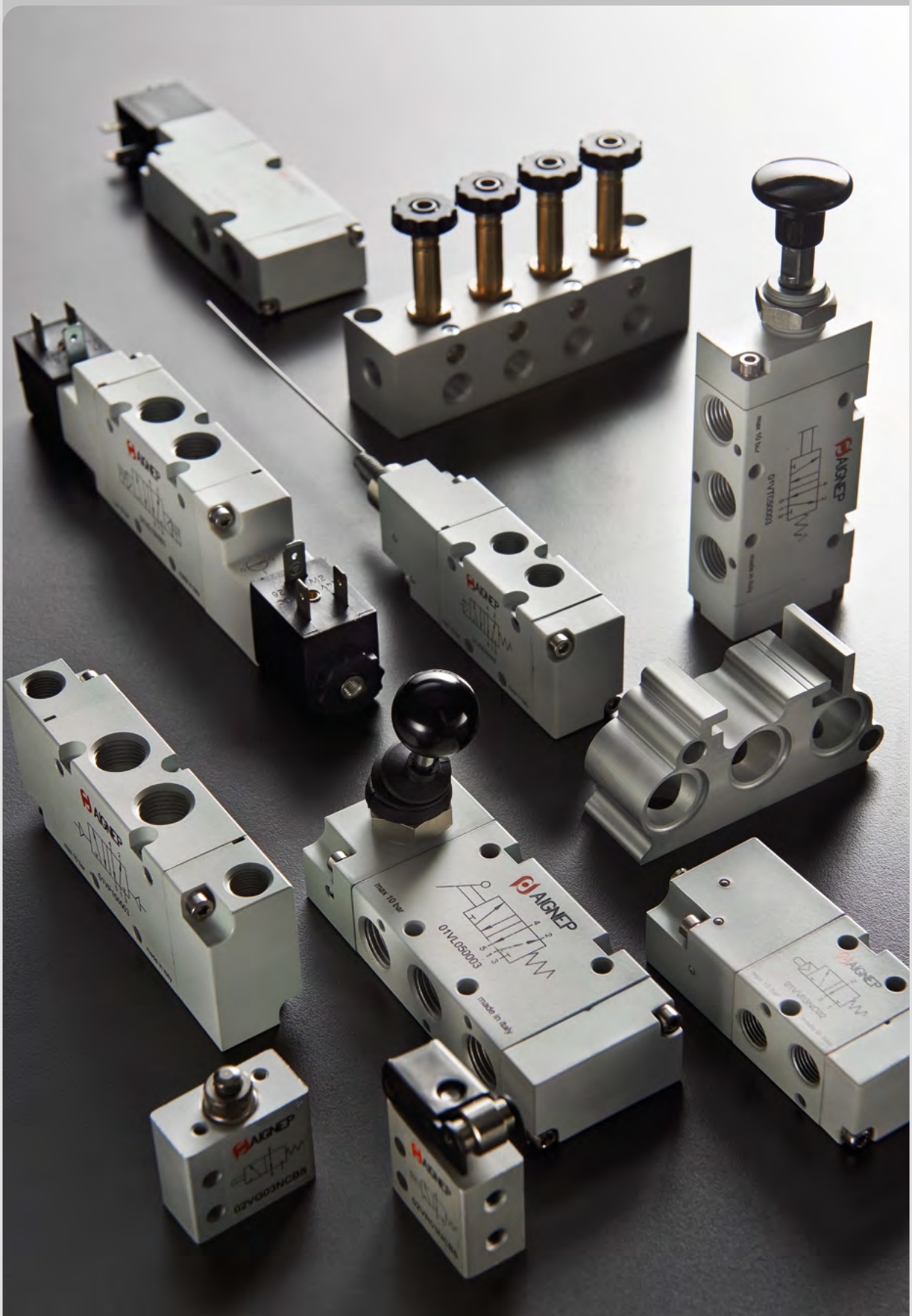

Valves Series

TECHNICAL CHARACTERISTICS

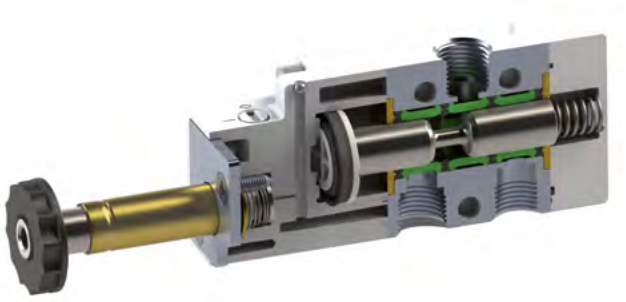

		1/8	1/4	3/8	1/2
THREADED		G 1/8 NPTF 1/8	G 1/4 NPTF 1/4	G 3/8 NPTF 3/8	G 1/2 NPTF 1/2
6 bar FLOW RATE with Δp 1 bar		740 Nl/min	1200 Nl/min	2000 Nl/min	5000 Nl/min
OPERATING PRESSURE	Monostable Spring return	29 ÷ 145 psi (2 ÷ 10 bar)			
	Monostable Pneumatic return	29 ÷ 145 psi (2 ÷ 10 bar)			
	Monostable Spring pneumatic return	44 ÷ 145 psi (3 ÷ 10 bar)			
	Bistable	15 ÷ 145 psi (1 ÷ 10 bar)			
TEMPERATURE	min	14 °F -10 °C			
	max	140 °F 60 °C			
SOLENOID VOLTAGE		24V DC - 12V DC - 24V AC - 110V AC - 220V AC			
MINIMUM POWER		2W - 3VA			
MANUAL CONTROL		BISTABLE			
TORQUE OF THE TIGHTENING SOLENOID'S NUT		0.6 Nm			

Reference Standard

1907/2006 REACH ✓ | 2011/65/CE RoHS | PED 2014/68/UE | ATEX 2014/34/UE | II 2GD Ex h IIC T6 Ex

Component Parts and Materials

Anodized aluminum body
Chemical nickel-plated spool
NBR seals

Series	Actuation	Reactuation	Ways	Function	Size	Thread	Solenoid
							on request
0 1 V	S	0	3	N C	0 2		S A
	S = Solenoid	0 = Monostable spring return	3 = 3/2	NO = Normally open	02 = 1/8	= BSPP	SA = SOL01012C1000
		1 = Bistable	5 = 5/2	NC = Normally closed	03 = 1/4	N = NPTF	S1 = SOL01024A2000
		4 = Pneumatic return	7 = 5/3	CC = All Ports Blocked	04 = 3/8		SB = SOL01024C1000
		5 = Spring Pneumatic return		OC = Cylinder Ports Open to Exhaust	05 = 1/2		SZ = SOL01024C3000
				PC = Cylinder Ports Pressurized			S2 = SOL01110A2000
				00 = Function not provided			S3 = SOL01220A2000
							UA = SOLU1012C1000
							U1 = SOLU1024A2000
							UB = SOLU1024C1000
							UZ = SOLU1024C3000
							U2 = SOLU1110A2000
							U3 = SOLU1220A2000
							WA = SOLX1012C1000
							W1 = SOLX1024A2000
							WB = SOLX1024C1000
							RA = SOLX2012C1000
							R1 = SOLX2024A2000
							RB = SOLX2024C1000
							R2 = SOLX2110A2000
							R3 = SOLX2220A2000

SOLENOIDS + CONNECTOR SEE PAGE: 18.169

3/2

SINGLE SOLENOID PILOT



Code	Function	Size	Pack.		Code	Function	Size	Pack.
01V S0 3 NC 02	3/2 NC	G 1/8	1	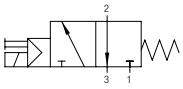	01V S0 3 NC 02 N	3/2 NC	NPTF 1/8	1
01V S0 3 NC 03	3/2 NC	G 1/4	1		01V S0 3 NC 03 N	3/2 NC	NPTF 1/4	1
01V S0 3 NC 04	3/2 NC	G 3/8	1		01V S0 3 NC 04 N	3/2 NC	NPTF 3/8	1
01V S0 3 NC 05	3/2 NC	G 1/2	1		01V S0 3 NC 05 N	3/2 NC	NPTF 1/2	1
01V S0 3 NO 02	3/2 NO	G 1/8	1	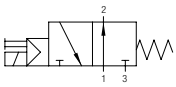	01V S0 3 NO 02 N	3/2 NO	NPTF 1/8	1
01V S0 3 NO 03	3/2 NO	G 1/4	1		01V S0 3 NO 03 N	3/2 NO	NPTF 1/4	1
01V S0 3 NO 04	3/2 NO	G 3/8	1		01V S0 3 NO 04 N	3/2 NO	NPTF 3/8	1
01V S0 3 NO 05	3/2 NO	G 1/2	1		01V S0 3 NO 05 N	3/2 NO	NPTF 1/2	1
01V S4 3 NC 02	3/2 NC	G 1/8	1	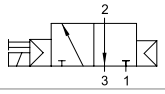	01V S4 3 NC 02 N	3/2 NC	NPTF 1/8	1
01V S4 3 NC 03	3/2 NC	G 1/4	1		01V S4 3 NC 03 N	3/2 NC	NPTF 1/4	1
01V S4 3 NO 02	3/2 NO	G 1/8	1	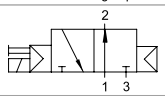	01V S4 3 NO 02 N	3/2 NO	NPTF 1/8	1
01V S4 3 NO 03	3/2 NO	G 1/4	1		01V S4 3 NO 03 N	3/2 NO	NPTF 1/4	1
01V S5 3 NC 02	3/2 NC	G 1/8	1	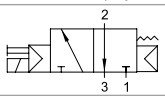	01V S5 3 NC 02 N	3/2 NC	NPTF 1/8	1
01V S5 3 NC 03	3/2 NC	G 1/4	1		01V S5 3 NC 03 N	3/2 NC	NPTF 1/4	1
01V S5 3 NO 02	3/2 NO	G 1/8	1	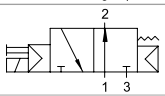	01V S5 3 NO 02 N	3/2 NO	NPTF 1/8	1
01V S5 3 NO 03	3/2 NO	G 1/4	1		01V S5 3 NO 03 N	3/2 NO	NPTF 1/4	1

G 1/8 - NPTF 1/8

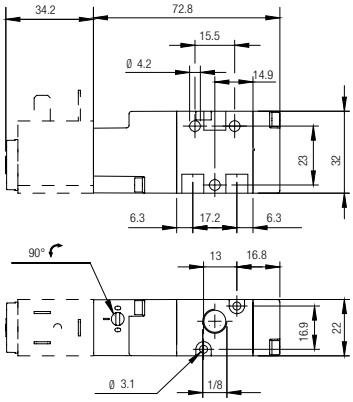

G 1/4 - NPTF 1/4

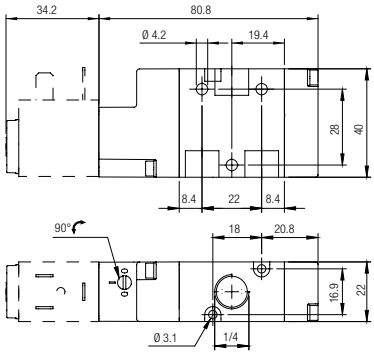

G 3/8 - NPTF 3/8

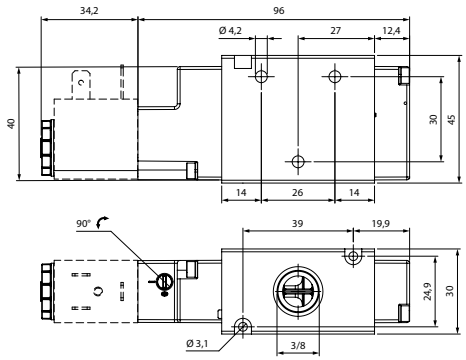

G 1/2 - NPTF 1/2

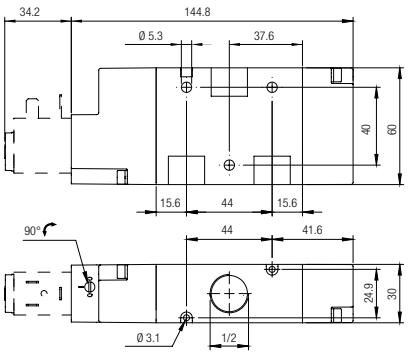

3/2

DOUBLE SOLENOID PILOT



Code	Function	Size	Pack.
01V S1 3 00 02	3/2	G 1/8	1
01V S1 3 00 03	3/2	G 1/4	1
01V S1 3 00 04	3/2	G 3/8	1
01V S1 3 00 05	3/2	G 1/2	1

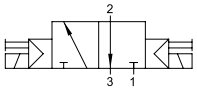

Code	Function	Size	Pack.
01V S1 3 00 02 N	3/2	NPTF 1/8	1
01V S1 3 00 03 N	3/2	NPTF 1/4	1
01V S1 3 00 04 N	3/2	NPTF 3/8	1
01V S1 3 00 05 N	3/2	NPTF 1/2	1

G 1/8 - NPTF 1/8

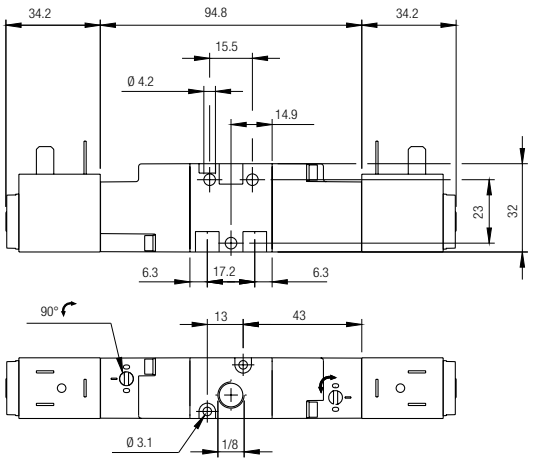

G 1/4 - NPTF 1/4

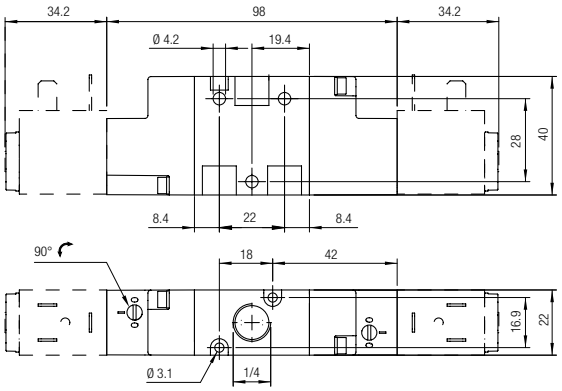

G 3/8 - NPTF 3/8

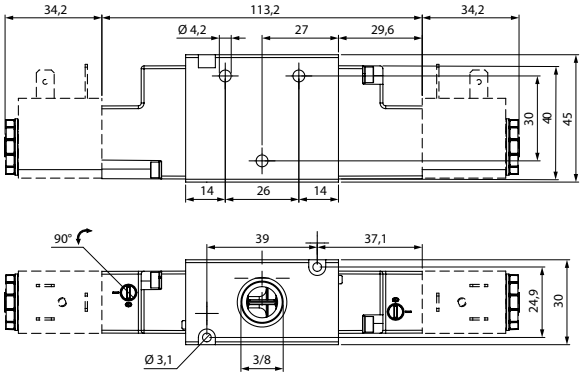

G 1/2 - NPTF 1/2

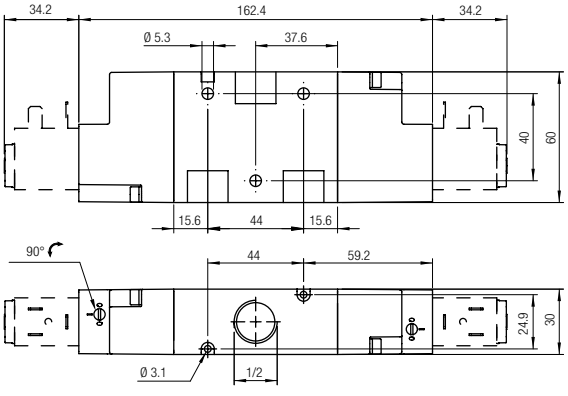

5/2

SINGLE SOLENOID PILOT



Code	Function	Size	Pack.
01V S0 5 00 02	5/2	G 1/8	1
01V S0 5 00 03	5/2	G 1/4	1
01V S0 5 00 04	5/2	G 3/8	1
01V S0 5 00 05	5/2	G 1/2	1
01V S4 5 00 02	3/2	G 1/8	1
01V S4 5 00 03	3/2	G 1/4	1

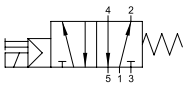

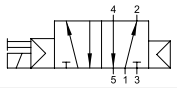

Code	Function	Size	Pack.
01V S0 5 00 02 N	5/2	NPTF 1/8	1
01V S0 5 00 03 N	5/2	NPTF 1/4	1
01V S0 5 00 04 N	5/2	NPTF 3/8	1
01V S0 5 00 05 N	5/2	NPTF 1/2	1
01V S4 5 00 02 N	3/2	NPTF 1/8	1
01V S4 5 00 03 N	3/2	NPTF 1/4	1

G 1/8 - NPTF 1/8

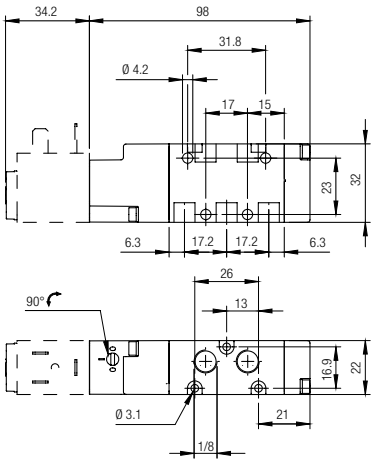

G 1/4 - NPTF 1/4

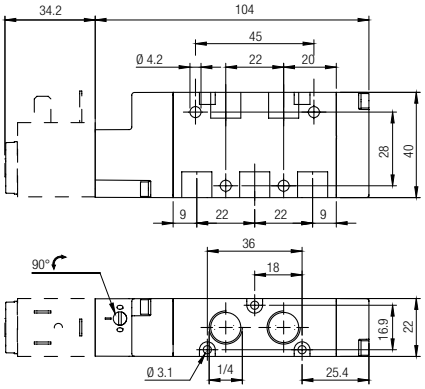

G 3/8 - NPTF 3/8

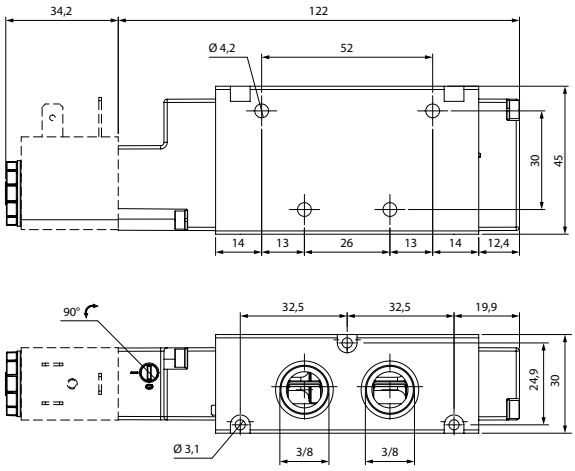

G 1/2 - NPTF 1/2

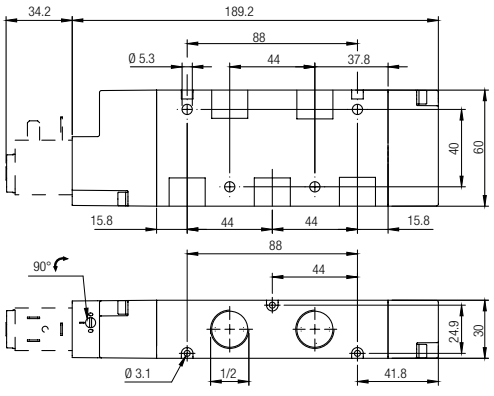

5/2

DOUBLE SOLENOID PILOT



Code	Function	Size	Pack.
01V S1 5 00 02	5/2	G 1/8	1
01V S1 5 00 03	5/2	G 1/4	1
01V S1 5 00 04	5/2	G 3/8	1
01V S1 5 00 05	5/2	G 1/2	1

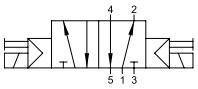

Code	Function	Size	Pack.
01V S1 5 00 02 N	5/2	NPTF 1/8	1
01V S1 5 00 03 N	5/2	NPTF 1/4	1
01V S1 5 00 04 N	5/2	NPTF 3/8	1
01V S1 5 00 05 N	5/2	NPTF 1/2	1

G 1/8 - NPTF 1/8

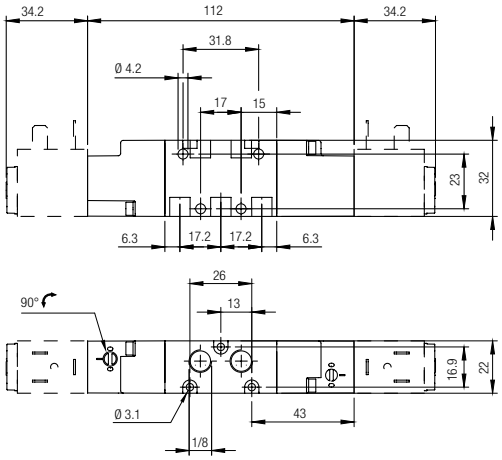

G 1/4 - NPTF 1/4

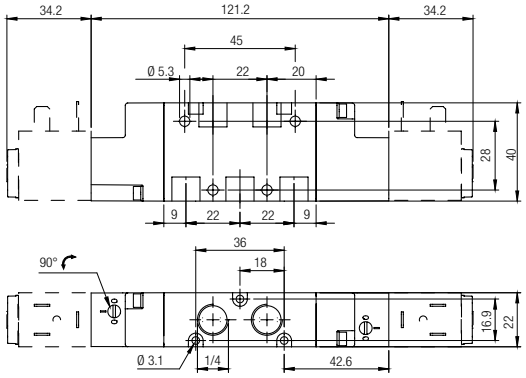

G 3/8 - NPTF 3/8

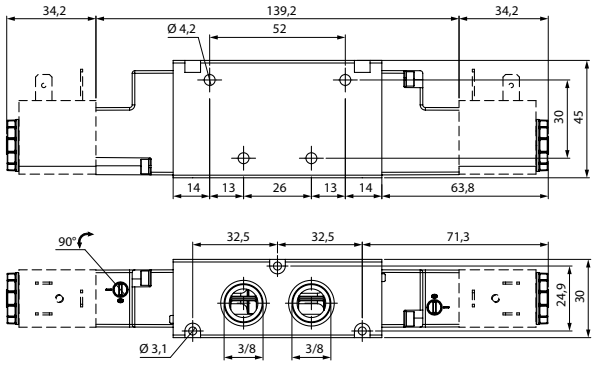

G 1/2 - NPTF 1/2

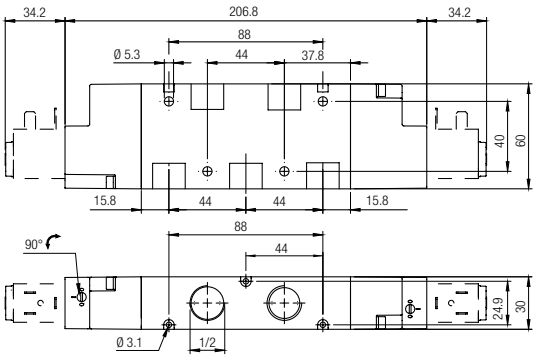

5/3

DOUBLE SOLENOID PILOT - SPRING RETURN



Code	Function	Size	Pack.
01V S0 7 CC 02	5/3 CC	G 1/8	1
01V S0 7 CC 03	5/3 CC	G 1/4	1
01V S0 7 CC 04	5/3 CC	G 3/8	1
01V S0 7 CC 05	5/3 CC	G 1/2	1
01V S0 7 OC 02	5/3 OC	G 1/8	1
01V S0 7 OC 03	5/3 OC	G 1/4	1
01V S0 7 OC 04	5/3 OC	G 3/8	1
01V S0 7 OC 05	5/3 OC	G 1/2	1
01V S0 7 PC 02	5/3 PC	G 1/8	1
01V S0 7 PC 03	5/3 PC	G 1/4	1
01V S0 7 PC 04	5/3 PC	G 3/8	1
01V S0 7 PC 05	5/3 PC	G 1/2	1

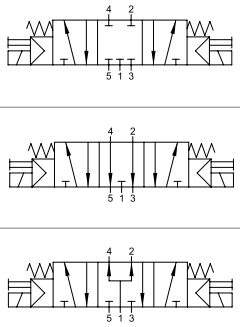

Code	Function	Size	Pack.
01V S0 7 CC 02 N	5/3 CC	NPTF 1/8	1
01V S0 7 CC 03 N	5/3 CC	NPTF 1/4	1
01V S0 7 CC 04 N	5/3 CC	NPTF 3/8	1
01V S0 7 CC 05 N	5/3 CC	NPTF 1/2	1
01V S0 7 OC 02 N	5/3 OC	NPTF 1/8	1
01V S0 7 OC 03 N	5/3 OC	NPTF 1/4	1
01V S0 7 OC 04 N	5/3 OC	NPTF 3/8	1
01V S0 7 OC 05 N	5/3 OC	NPTF 1/2	1
01V S0 7 PC 02 N	5/3 PC	NPTF 1/8	1
01V S0 7 PC 03 N	5/3 PC	NPTF 1/4	1
01V S0 7 PC 04 N	5/3 PC	NPTF 3/8	1
01V S0 7 PC 05 N	5/3 PC	NPTF 1/2	1

G 1/8 - NPTF 1/8

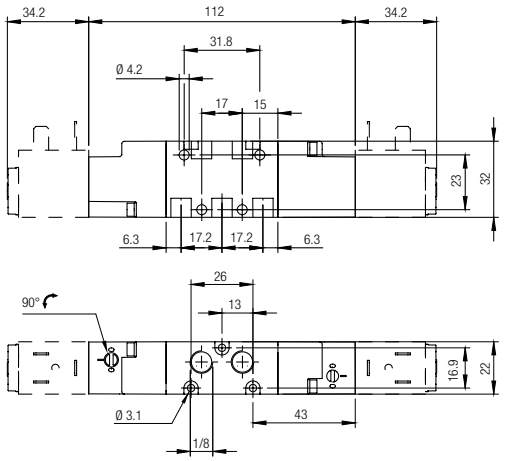

G 1/4 - NPTF 1/4

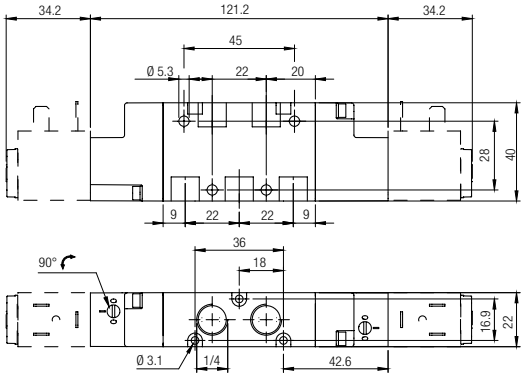

G 3/8 - NPTF 3/8

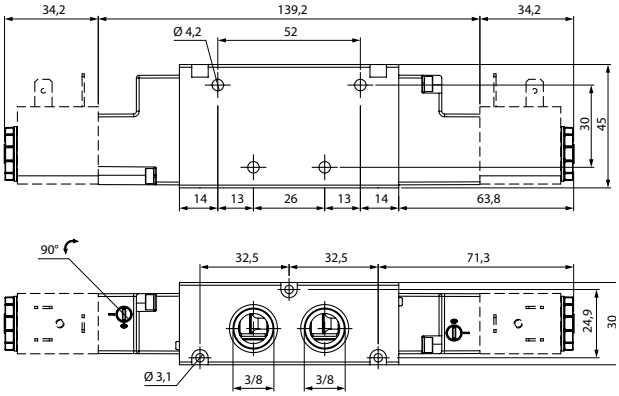

G 1/2 - NPTF 1/2

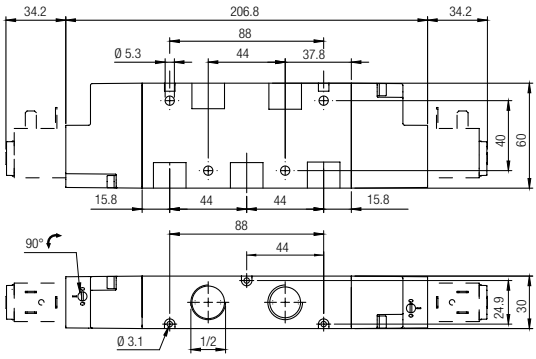

TECHNICAL CHARACTERISTICS

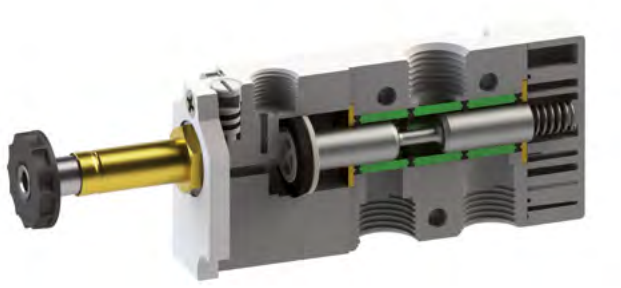

		1/8	1/4
THREAD		G 1/8 NPTF 1/8	G 1/4 NPTF 1/4
6 bar FLOW RATE with Δp 1 bar		740 Nl/min	1200 Nl/min
OPERATING PRESSURE		Vacuum ÷ 145 psi (Vacuum ÷ 10 bar)	
PRESSURE DRIVE	Monostable Pneumatic return	29 ÷ 145 psi (2 ÷ 10 bar)	
	Monostable Spring return	29 ÷ 145 psi (2 ÷ 10 bar)	
	Monostable Pneumatic return	29 ÷ 145 psi (2 ÷ 10 bar)	
	Monostable Spring Pneumatic return	29 ÷ 145 psi (2 ÷ 10 bar)	
	Bistable	15 ÷ 145 psi (1 ÷ 10 bar)	
TEMPERATURE	min	14 °F -10 °C	
	max	140 °F 60 °C	
SOLENOID VOLTAGE		24V DC - 12V DC - 24V AC 110V AC - 220V AC	
MINIMUM POWER		2W - 3VA	
MANUAL CONTROL		BISTABLE	
TIGHTENING TORQUE OF THE SOLENOID'S NUT		0.6 Nm	

Reference Standard

1907/2006 REACH ✓ | 2011/65/CE RoHS ✓ | PED 2014/68/UE | ATEX 2014/34/UE | II 2GD Ex h IIC T6 Ex

Component Parts and Materials

Anodized aluminum body
Chemical nickel-plated spool
NBR seals

Series	Actuation	Reactuation	Ways	Function	Size	Thread	Operator
0 1 V	A	0	3	N C	0 2		S A

Actuation
A = Solenoid Assisted

Reactuation
0 = Monostable spring return
1 = Bistable
4 = Pneumatic return
5 = Spring Pneumatic return

Ways
3 = 3/2
5 = 5/2
7 = 5/3

Function
NO = Normally open
NC = Normally closed
CC = All Ports Blocked
OC = Cylinder Ports Open to Exhaust
PC = Cylinder Ports Pressurized
00 = Function not provided

Size
02 = 1/8
03 = 1/4

Thread
= BSPP
N = NPTF

Operator
SA = SOL01012C1000
S1 = SOL01024A2000
SB = SOL01024C1000
SZ = SOL01024C3000
S2 = SOL01110A2000
S3 = SOL01220A2000

UA = SOLU1012C1000
U1 = SOLU1024A2000
UB = SOLU1024C1000
UZ = SOLU1024C3000
U2 = SOLU1110A2000
U3 = SOLU1220A2000

WA = SOLX1012C1000
W1 = SOLX1024A2000
WB = SOLX1024C1000

RA = SOLX2012C1000
R1 = SOLX2024A2000
RB = SOLX2024C1000
R2 = SOLX2110A2000
R3 = SOLX2220A2000

SOLENOIDS + CONNECTOR SEE PAGE: 18.169

3/2

SINGLE SOLENOID EXTERNAL PILOT



Code	Function	Size	Pack.		Code	Function	Size	Pack.
01V A0 3 NC 02	3/2 NC	G 1/8	1	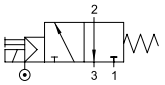	01V A0 3 NC 02 N	3/2 NC	NPTF 1/8	1
01V A0 3 NC 03	3/2 NC	G 1/4	1		01V A0 3 NC 03 N	3/2 NC	NPTF 1/4	1
01V A0 3 NO 02	3/2 NO	G 1/8	1	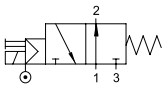	01V A0 3 NO 02 N	3/2 NO	NPTF 1/8	1
01V A0 3 NO 03	3/2 NO	G 1/4	1		01V A0 3 NO 03 N	3/2 NO	NPTF 1/4	1
01V A4 3 NC 02	3/2 NC	G 1/8	1	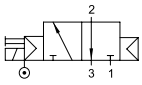	01V A4 3 NC 02 N	3/2 NC	NPTF 1/8	1
01V A4 3 NC 03	3/2 NC	G 1/4	1		01V A4 3 NC 03 N	3/2 NC	NPTF 1/4	1
01V A4 3 NO 02	3/2 NO	G 1/8	1	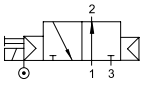	01V A4 3 NO 02 N	3/2 NO	NPTF 1/8	1
01V A4 3 NO 03	3/2 NO	G 1/4	1		01V A4 3 NO 03 N	3/2 NO	NPTF 1/4	1
01V A5 3 NC 02	3/2 NC	G 1/8	1	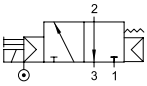	01V A5 3 NC 02 N	3/2 NC	NPTF 1/8	1
01V A5 3 NC 03	3/2 NC	G 1/4	1		01V A5 3 NC 03 N	3/2 NC	NPTF 1/4	1
01V A5 3 NO 02	3/2 NO	G 1/8	1	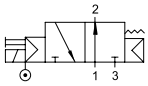	01V A5 3 NO 02 N	3/2 NO	NPTF 1/8	1
01V A5 3 NO 03	3/2 NO	G 1/4	1		01V A5 3 NO 03 N	3/2 NO	NPTF 1/4	1

G 1/8 - NPTF 1/8

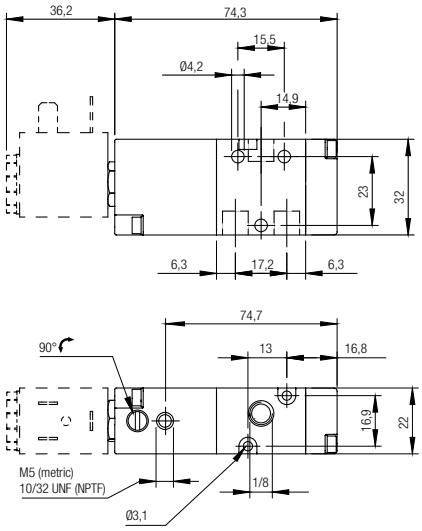

G 1/4 - NPTF 1/4

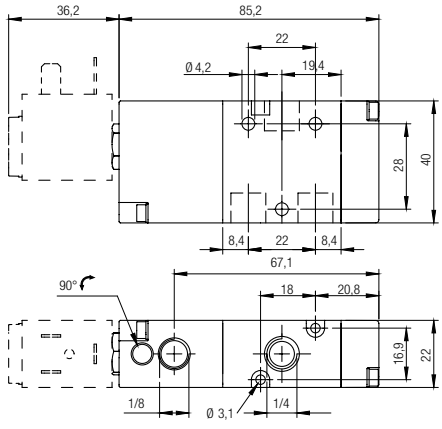

3/2

DOUBLE SOLENOID EXTERNAL PILOT



Code	Function	Size	Pack.
01V A1 3 00 02	3/2	G 1/8	1
01V A1 3 00 03	3/2	G 1/4	1

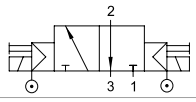

Code	Function	Size	Pack.
01V A1 3 00 02 N	3/2	NPTF 1/8	1
01V A1 3 00 03 N	3/2	NPTF 1/4	1

G 1/8 - NPTF 1/8

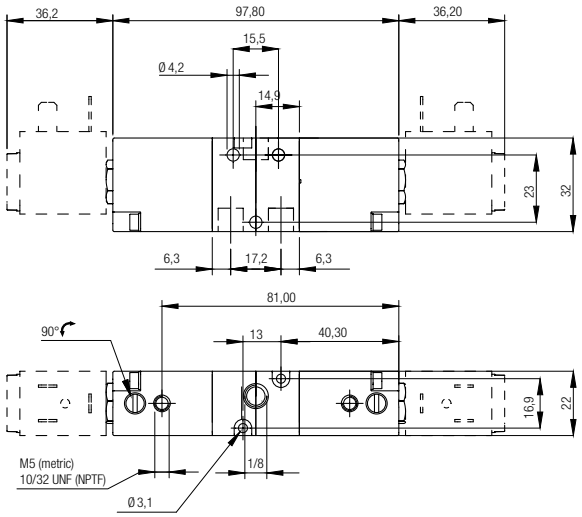

G 1/4 - NPTF 1/4

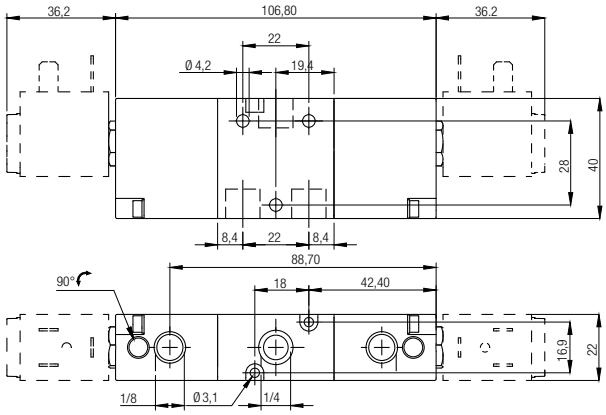

5/2

SINGLE SOLENOID EXTERNAL PILOT



Code	Function	Size	Pack.
01V A0 5 00 02	5/2	G 1/8	1
01V A0 5 00 03	5/2	G 1/4	1
01V A4 5 00 02	5/2	G 1/8	1
01V A4 5 00 03	5/2	G 1/4	1

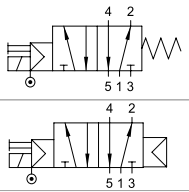

Code	Function	Size	Pack.
01V A0 5 00 02 N	5/2	NPTF 1/8	1
01V A0 5 00 03 N	5/2	NPTF 1/4	1
01V A4 5 00 02 N	5/2	NPTF 1/8	1
01V A4 5 00 03 N	5/2	NPTF 1/4	1

G 1/8 - NPTF 1/8

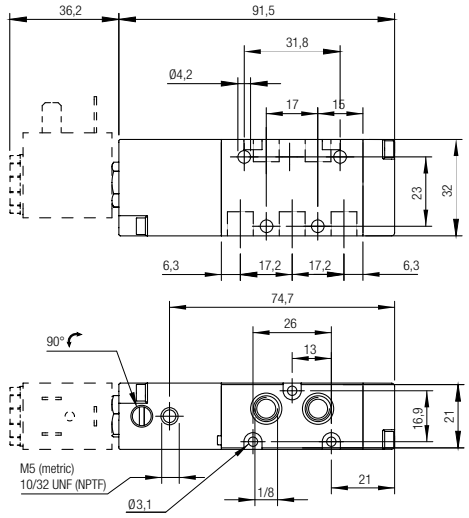

G 1/4 - NPTF 1/4

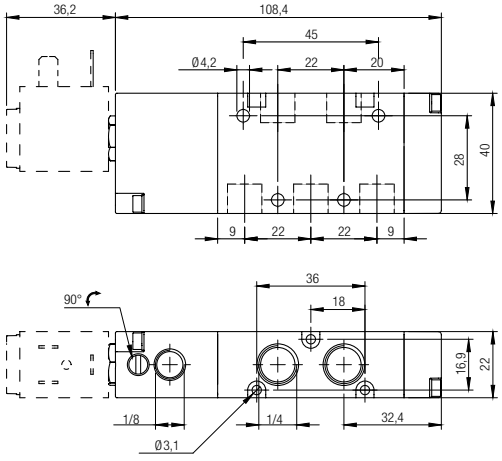

5/2

DOUBLE SOLENOID EXTERNAL PILOT



Code	Function	Size	Pack.
01V A1 5 00 02	5/2	G 1/8	1
01V A1 5 00 03	5/2	G 1/4	1

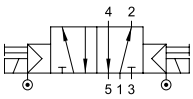

Code	Function	Size	Pack.
01V A1 5 00 02 N	5/2	NPTF 1/8	1
01V A1 5 00 03 N	5/2	NPTF 1/4	1

G 1/8 - NPTF 1/8

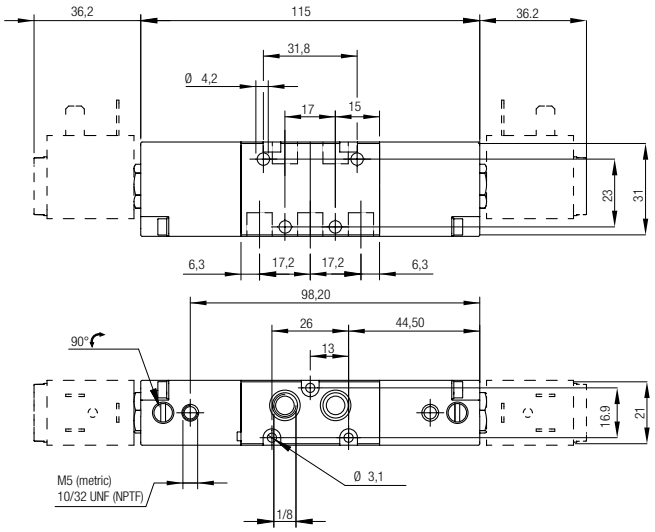

G 1/4 - NPTF 1/4

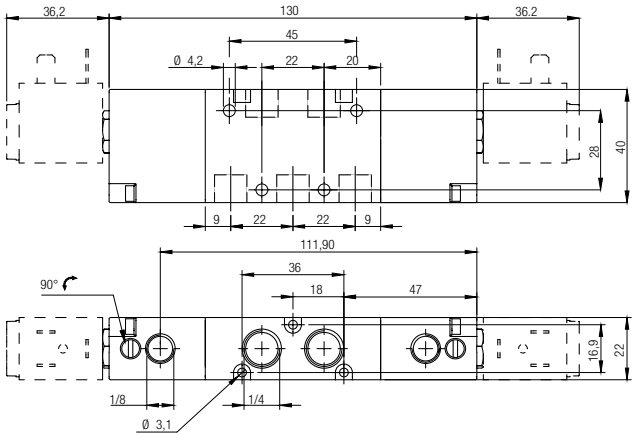

5/3

DOUBLE SOLENOID EXTERNAL PILOT - SPRING RETURN



Code	Function	Size	Pack.		Code	Function	Size	Pack.
01V A0 7 CC 02	5/3 CC	G 1/8	1	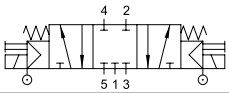	01V A0 7 CC 02 N	5/3 CC	NPTF 1/8	1
01V A0 7 CC 03	5/3 CC	G 1/4	1		01V A0 7 CC 03 N	5/3 CC	NPTF 1/4	1
01V A0 7 OC 02	5/3 OC	G 1/8	1	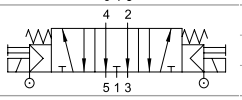	01V A0 7 OC 02 N	5/3 OC	NPTF 1/8	1
01V A0 7 OC 03	5/3 OC	G 1/4	1		01V A0 7 OC 03 N	5/3 OC	NPTF 1/4	1
01V A0 7 PC 02	5/3 PC	G 1/8	1	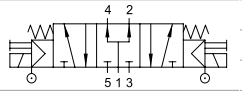	01V A0 7 PC 02 N	5/3 PC	NPTF 1/8	1
01V A0 7 PC 03	5/3 PC	G 1/4	1		01V A0 7 PC 03 N	5/3 PC	NPTF 1/4	1

G 1/8 - NPTF 1/8

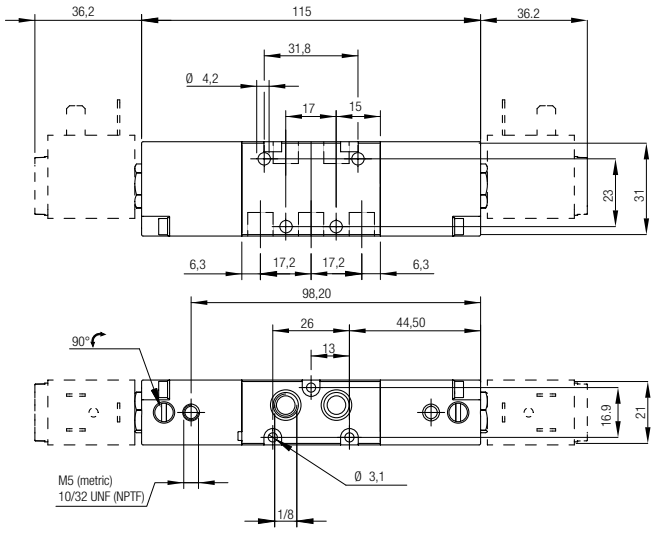

G 1/4 - NPTF 1/4

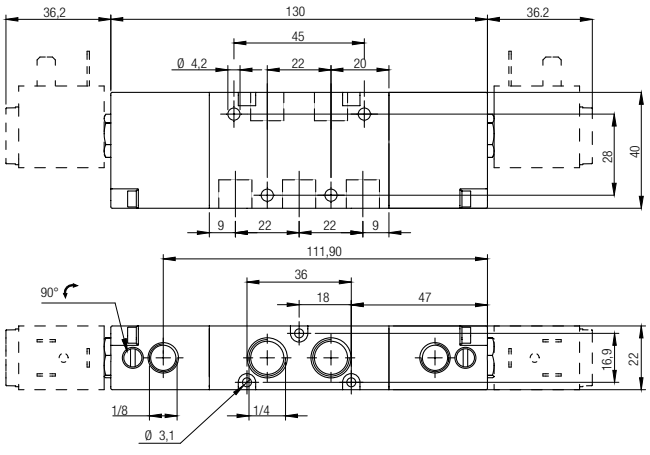

Minimum actuating pressure

Pilot minimum pressure to feed the valve compared to the *operating pressure.*

01VA 3/2 - 1/8"
Pneumatic return

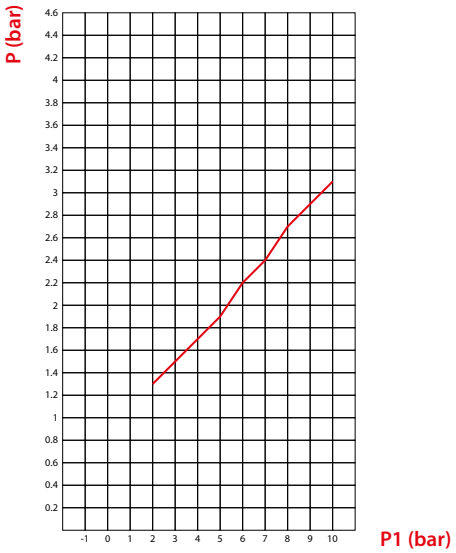

01VA 3/2 - 1/4"
Pneumatic return

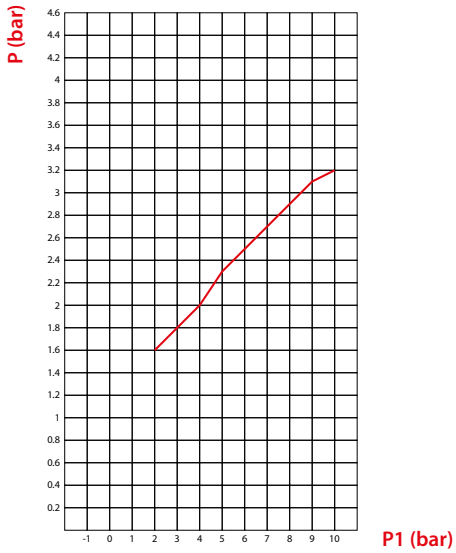

P (bar)
Pressione minima di azionamento
Minimum actuating pressure
Minimaler Betätigungsdruck
Pression d'actionnement minimale
Presión mínima de accionamiento
Pressão mínima de atuação

P1 (bar)
Pressione di funzionamento
Operating pressure
Betriebsdruck
Pression de service
Presión de funcionamiento
Pressão operacional

01VA 3/2 - 1/8"
Pneumatic return + Spring

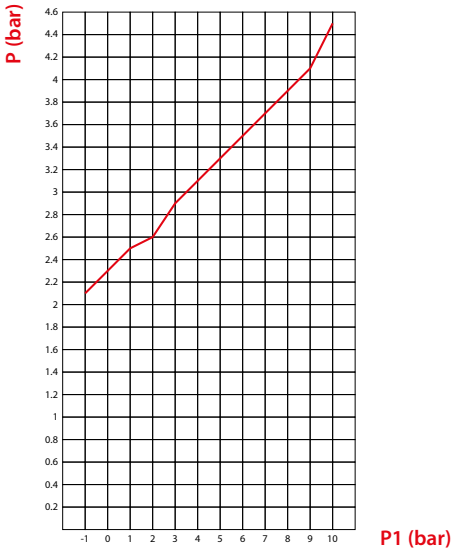

01VA 3/2 - 1/4"
Pneumatic return + Spring

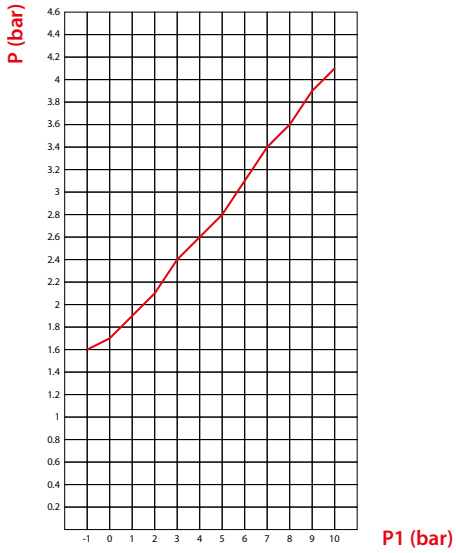

P (bar)
Pressione minima di azionamento
Minimum actuating pressure
Minimaler Betätigungsdruck
Pression d'actionnement minimale
Presión mínima de accionamiento
Pressão mínima de atuação

P1 (bar)
Pressione di funzionamento
Operating pressure
Betriebsdruck
Pression de service
Presión de funcionamiento
Pressão operacional

Minimum actuating pressure

Pilot minimum pressure to feed the valve compared to the *operating pressure.*

01VA 5/2 - 1/8"
Pneumatic return

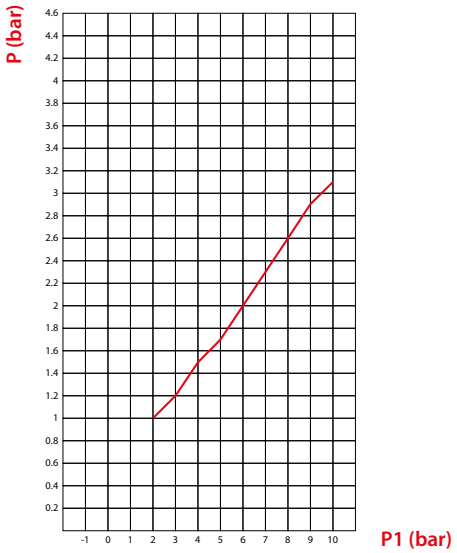

01VA 5/2 - 1/4"
Pneumatic return

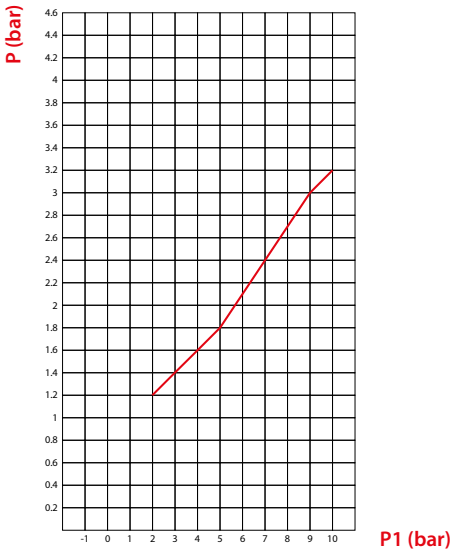

P (bar)
Pressione minima di azionamento
Minimum actuating pressure
Minimaler Betätigungsdruck
Pression d'actionnement minimale
Presión mínima de accionamiento
Pressão mínima de atuação

P1 (bar)
Pressione di funzionamento
Operating pressure
Betriebsdruck
Pression de service
Presión de funcionamiento
Pressão operacional

TECHNICAL CHARACTERISTICS

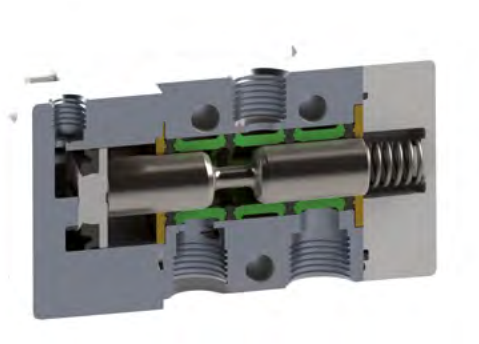

		1/8	1/4	3/8	1/2
THREAD		G 1/8 NPTF 1/8	G 1/4 NPTF 1/4	G3/8 NPTF 3/8	G 1/2 NPTF 1/2
6 bar FLOW RATE with Δp 1 bar		740 Nl/min	1200 Nl/min	2000 Nl/min	5000 Nl/min
OPERATING PRESSURE		Vacuum ÷ 145 psi (Vacuum ÷ 10 bar)			
PRESSURE DRIVE	Monostable Pneumatic return	29 ÷ 145 psi (2 ÷ 10 bar)			
	Monostable Spring return	29 ÷ 145 psi (2 ÷ 10 bar)			
	Monostable Pneumatic return	29 ÷ 145 psi (2 ÷ 10 bar)			
	Monostable Spring pneumatic return	29 ÷ 145 psi (2 ÷ 10 bar)			
	Bistable	15 ÷ 145 psi (1 ÷ 10 bar)			
TEMPERATURE	min	14 °F -10 °C			
	max	140 °F 60 °C			

Reference Standard

1907/2006 REACH ✓ | 2011/65/CE RoHS ✓ | PED 2014/68/UE | ATEX 2014/34/UE

Component Parts and Materials

Anodized aluminum body
Chemical nickel-plated spool
NBR seals

Series	Actuation	Reactuation	Ways	Function	Size	Thread
0 1 V	P	0	3	N C	0 2	
	P = Pneumatic	0 = Monostable spring return	3 = 3/2	NO = Normally open	02 = 1/8	= BSPP
		1 = Bistable	5 = 5/2	NC = Normally closed	03 = 1/4	N = NPTF
		4 = Pneumatic return	7 = 5/3	CC = All Ports Blocked	04 = 3/8	
		5 = Spring Pneumatic return		OC = Cylinder Ports Open to Exhaust	05 = 1/2	
				PC = Cylinder Ports Pressurized		
				00 = Function not provided		

3/2

SINGLE AIR PILOT



Code	Function	Size	Pack.		Code	Function	Size	Pack.
01V P0 3 NC 02	3/2 NC	G 1/8	1		01V P0 3 NC 02 N	3/2 NC	NPTF 1/8	1
01V P0 3 NC 03	3/2 NC	G 1/4	1		01V P0 3 NC 03 N	3/2 NC	NPTF 1/4	1
01V P0 3 NC 04	3/2 NC	G 3/8	1		01V P0 3 NC 04 N	3/2 NC	NPTF 3/8	1
01V P0 3 NC 05	3/2 NC	G 1/2	1		01V P0 3 NC 05 N	3/2 NC	NPTF 1/2	1
01V P0 3 NO 02	3/2 NO	G 1/8	1		01V P0 3 NO 02 N	3/2 NO	NPTF 1/8	1
01V P0 3 NO 03	3/2 NO	G 1/4	1		01V P0 3 NO 03 N	3/2 NO	NPTF 1/4	1
01V P0 3 NO 04	3/2 NO	G 3/8	1		01V P0 3 NO 04 N	3/2 NO	NPTF 3/8	1
01V P0 3 NO 05	3/2 NO	G 1/2	1		01V P0 3 NO 05 N	3/2 NO	NPTF 1/2	1
01V P4 3 NC 02	3/2 NC	G 1/8	1		01V P4 3 NC 02 N	3/2 NC	NPTF 1/8	1
01V P4 3 NC 03	3/2 NC	G 1/4	1		01V P4 3 NC 03 N	3/2 NC	NPTF 1/4	1
01V P4 3 NO 02	3/2 NO	G 1/8	1		01V P4 3 NO 02 N	3/2 NO	NPTF 1/8	1
01V P4 3 NO 03	3/2 NO	G 1/4	1		01V P4 3 NO 03 N	3/2 NO	NPTF 1/4	1
01V P5 3 NC 02	3/2 NC	G 1/8	1		01V P5 3 NC 02 N	3/2 NC	NPTF 1/8	1
01V P5 3 NC 03	3/2 NC	G 1/4	1		01V P5 3 NC 03 N	3/2 NC	NPTF 1/4	1
01V P5 3 NO 02	3/2 NO	G 1/8	1		01V P5 3 NO 02 N	3/2 NO	NPTF 1/8	1
01V P5 3 NO 03	3/2 NO	G 1/4	1		01V P5 3 NO 03 N	3/2 NO	NPTF 1/4	1

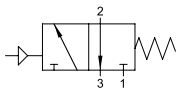

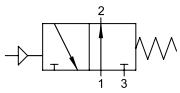

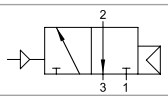

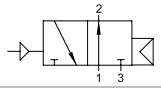

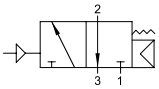

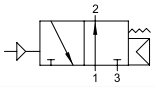

G 1/8 - NPTF 1/8

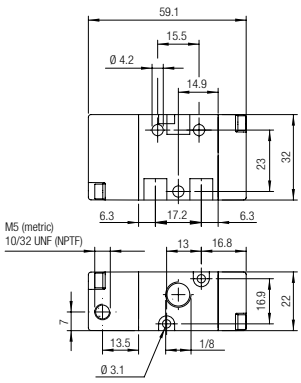

G 1/4 - NPTF 1/4

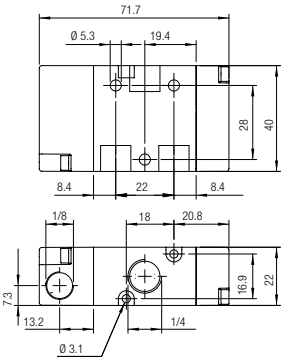

G 3/8 - NPTF 3/8

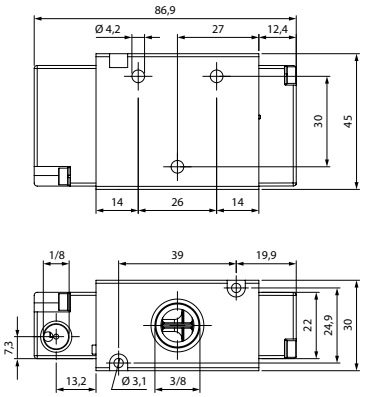

G 1/2 - NPTF 1/2

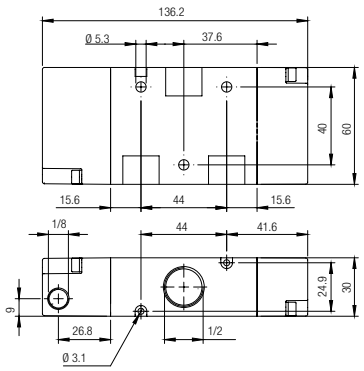

3/2

DOUBLE AIR PILOT



Code	Function	Size	Pack.
01V P1 3 00 02	3/2	G 1/8	1
01V P1 3 00 03	3/2	G 1/4	1
01V P1 3 00 04	3/2	G 3/8	1
01V P1 3 00 05	3/2	G 1/2	1

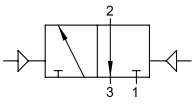

Code	Function	Size	Pack.
01V P1 3 00 02 N	3/2	NPTF 1/8	1
01V P1 3 00 03 N	3/2	NPTF 1/4	1
01V P1 3 00 04 N	3/2	NPTF 3/8	1
01V P1 3 00 05 N	3/2	NPTF 1/2	1

G 1/8 - NPTF 1/8

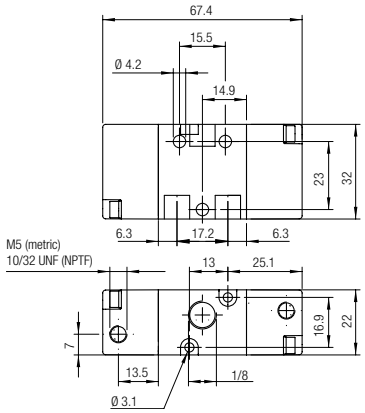

G 1/4 - NPTF 1/4

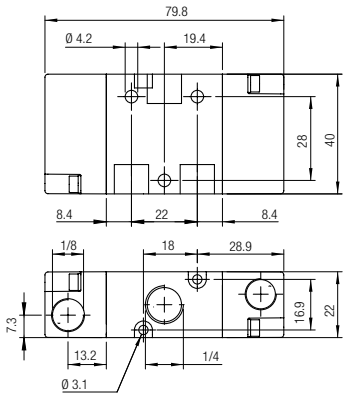

G 3/8 - NPTF 3/8

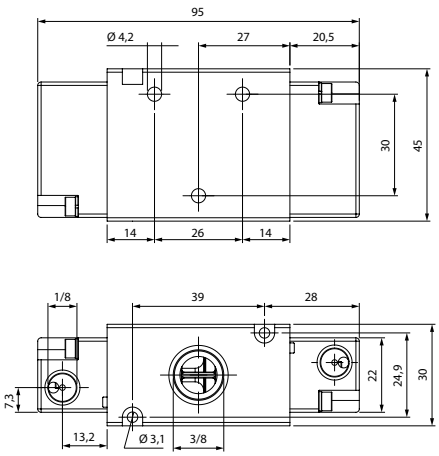

G 1/2 - NPTF 1/2

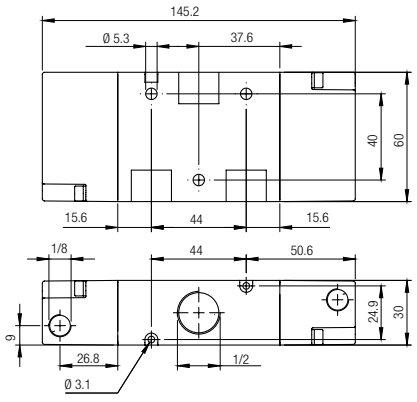

5/2

SINGLE AIR PILOT



Code	Function	Size	Pack.
01V P0 5 00 02	5/2	G 1/8	1
01V P0 5 00 03	5/2	G 1/4	1
01V P0 5 00 04	5/2	G 3/8	1
01V P0 5 00 05	5/2	G 1/2	1
01V P4 5 00 02	5/2	G 1/8	1
01V P4 5 00 03	5/2	G 1/4	1

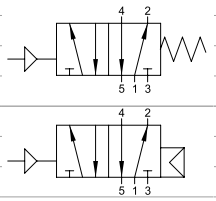

Code	Function	Size	Pack.
01V P0 5 00 02 N	5/2	NPTF 1/8	1
01V P0 5 00 03 N	5/2	NPTF 1/4	1
01V P0 5 00 04 N	5/2	NPTF 3/8	1
01V P0 5 00 05 N	5/2	NPTF 1/2	1
01V P4 5 00 02 N	5/2	NPTF 1/8	1
01V P4 5 00 03 N	5/2	NPTF 1/4	1

G 1/8 - NPTF 1/8

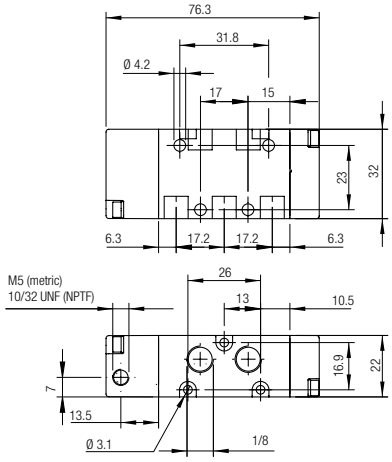

G 1/4 - NPTF 1/4

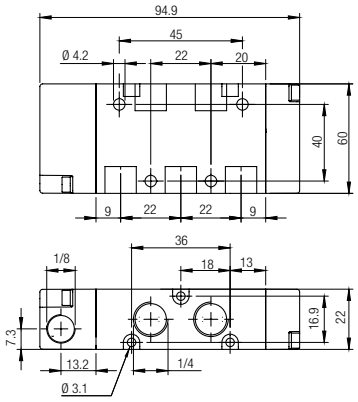

G 3/8 - NPTF 3/8

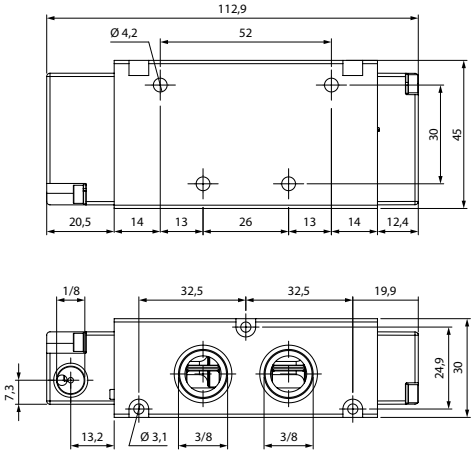

G 1/2 - NPTF 1/2

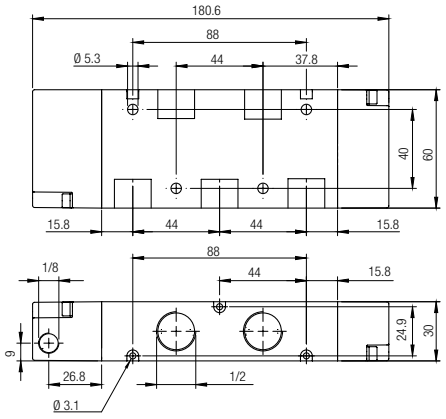

5/2

DOUBLE AIR PILOT



Code	Function	Size	Pack.
01V P1 5 00 02	5/2	G 1/8	1
01V P1 5 00 03	5/2	G 1/4	1
01V P1 5 00 04	5/2	G 3/8	1
01V P1 5 00 05	5/2	G 1/2	1

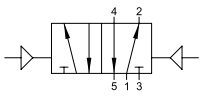

Code	Function	Size	Pack.
01V P1 5 00 02 N	5/2	NPTF 1/8	1
01V P1 5 00 03 N	5/2	NPTF 1/4	1
01V P1 5 00 04 N	5/2	NPTF 3/8	1
01V P1 5 00 05 N	5/2	NPTF 1/2	1

G 1/8 - NPTF 1/8

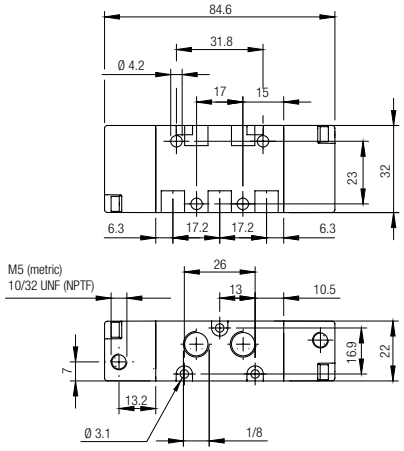

G 1/4 - NPTF 1/4

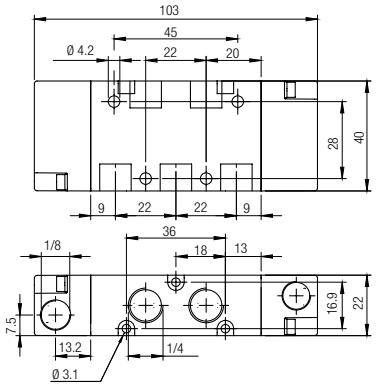

G 3/8 - NPTF 3/8

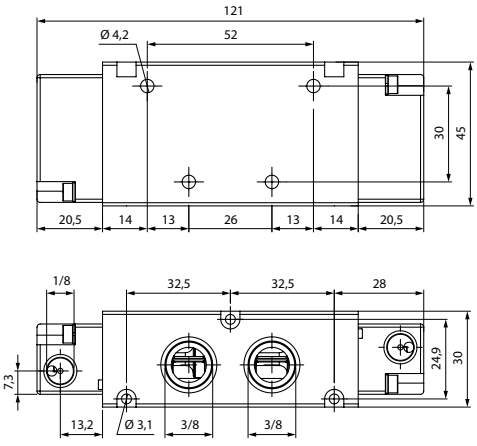

G 1/2 - NPTF 1/2

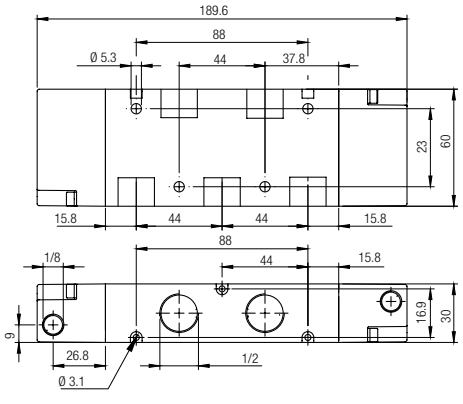

5/3

DOUBLE AIR PILOT - SPRING RETURN



Code	Function	Size	Pack.
01V P0 7 CC 02	5/3 CC	G 1/8	1
01V P0 7 CC 03	5/3 CC	G 1/4	1
01V P0 7 CC 04	5/3 CC	G 3/8	1
01V P0 7 CC 05	5/3 CC	G 1/2	1
01V P0 7 OC 02	5/3 OC	G 1/8	1
01V P0 7 OC 03	5/3 OC	G 1/4	1
01V P0 7 OC 04	5/3 OC	G 3/8	1
01V P0 7 OC 05	5/3 OC	G 1/2	1
01V P0 7 PC 02	5/3 PC	G 1/8	1
01V P0 7 PC 03	5/3 PC	G 1/4	1
01V P0 7 PC 04	5/3 PC	G 3/8	1
01V P0 7 PC 05	5/3 PC	G 1/2	1

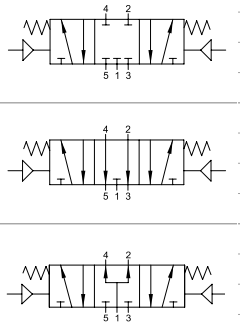

Code	Function	Size	Pack.
01V P0 7 CC 02 N	5/3 CC	NPTF 1/8	1
01V P0 7 CC 03 N	5/3 CC	NPTF 1/4	1
01V P0 7 CC 04 N	5/3 CC	NPTF 3/8	1
01V P0 7 CC 05 N	5/3 CC	NPTF 1/2	1
01V P0 7 OC 02 N	5/3 OC	NPTF 1/8	1
01V P0 7 OC 03 N	5/3 OC	NPTF 1/4	1
01V P0 7 OC 04 N	5/3 OC	NPTF 3/8	1
01V P0 7 OC 05 N	5/3 OC	NPTF 1/2	1
01V P0 7 PC 02 N	5/3 PC	NPTF 1/8	1
01V P0 7 PC 03 N	5/3 PC	NPTF 1/4	1
01V P0 7 PC 04 N	5/3 PC	NPTF 3/8	1
01V P0 7 PC 05 N	5/3 PC	NPTF 1/2	1

G 1/8 - NPTF 1/8

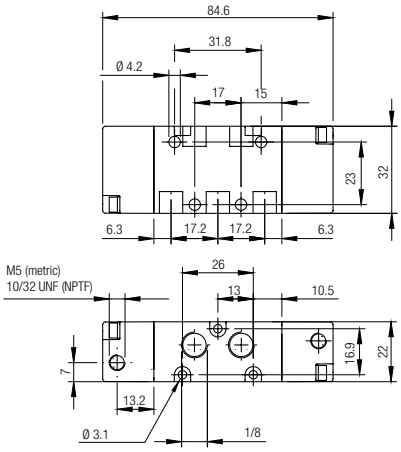

G 1/4 - NPTF 1/4

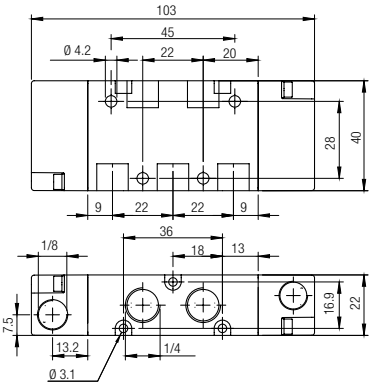

G 3/8 - NPTF 3/8

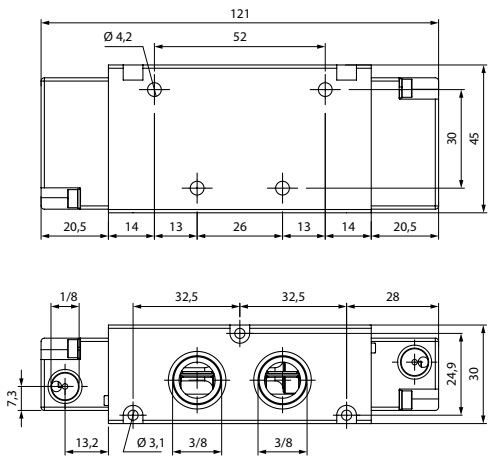

G 1/2 - NPTF 1/2

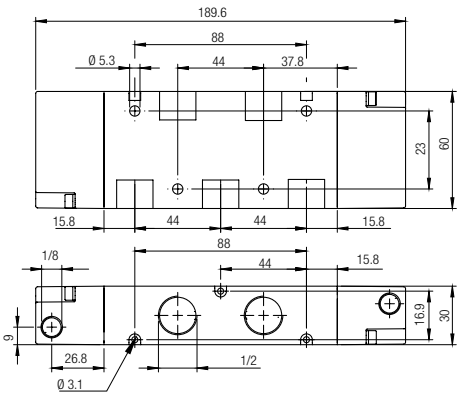

Minimum actuating pressure

Pilot minimum pressure to feed the valve compared to the *operating pressure.*

01VP 3/2 - 1/8"
Pneumatic return

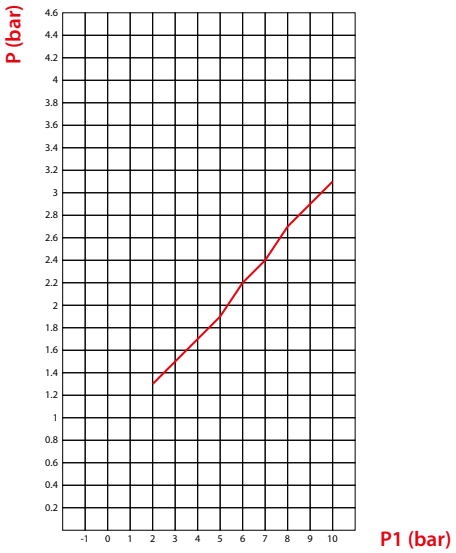

01VP 3/2 - 1/4"
Pneumatic return

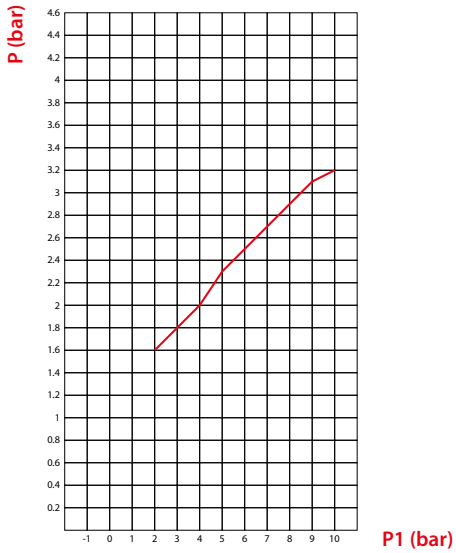

P (bar)
Pressione minima di azionamento
Minimum actuating pressure
Minimaler Betätigungsdruck
Pression d'actionnement minimale
Presión mínima de accionamiento
Pressão mínima de atuação

P1 (bar)
Pressione di funzionamento
Operating pressure
Betriebsdruck
Pression de service
Presión de funcionamiento
Pressão operacional

01VP 3/2 - 1/8"
Pneumatic return + Spring

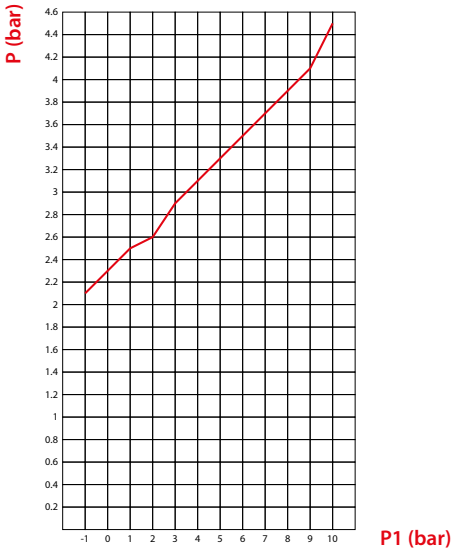

01VP 3/2 - 1/4"
Pneumatic return + Spring

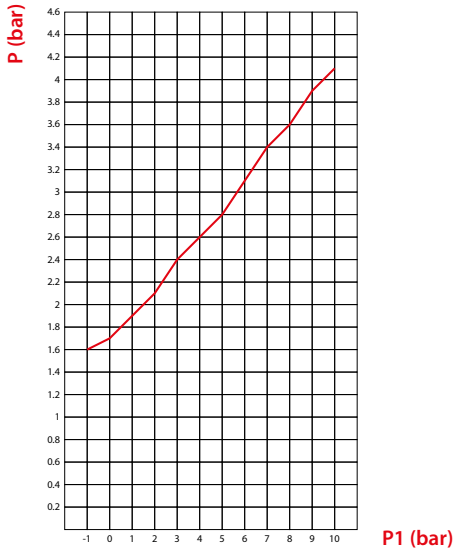

P (bar)
Pressione minima di azionamento
Minimum actuating pressure
Minimaler Betätigungsdruck
Pression d'actionnement minimale
Presión mínima de accionamiento
Pressão mínima de atuação

P1 (bar)
Pressione di funzionamento
Operating pressure
Betriebsdruck
Pression de service
Presión de funcionamiento
Pressão operacional

Minimum actuating pressure

Pilot minimum pressure to feed the valve compared to the *operating pressure.*

01VP 5/2 - 1/8"
Pneumatic return

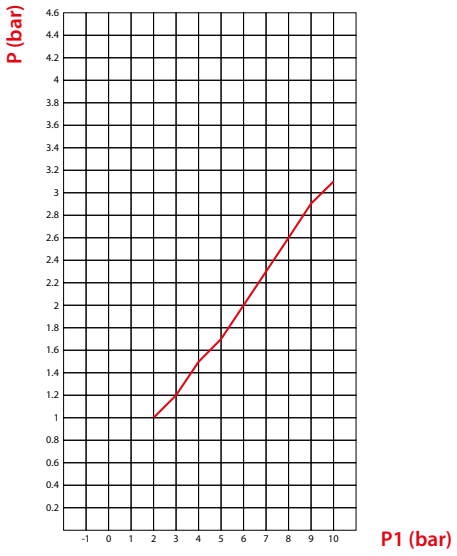

01VP 5/2 - 1/4"
Pneumatic return

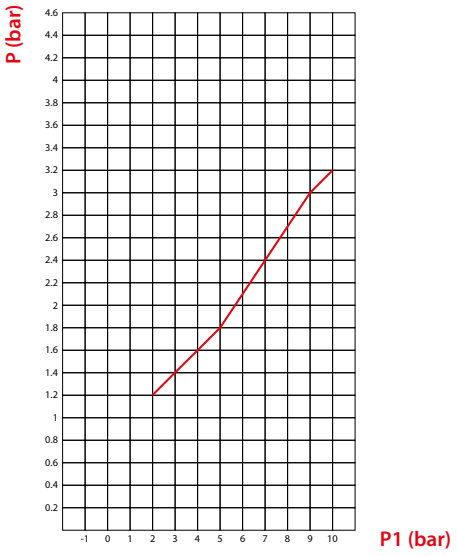

P (bar)
Pressione minima di azionamento
Minimum actuating pressure
Minimaler Betätigungsdruck
Pression d'actionnement minimale
Presión mínima de accionamiento
Pressão mínima de atuação

P1 (bar)
Pressione di funzionamento
Operating pressure
Betriebsdruck
Pression de service
Presión de funcionamiento
Pressão operacional

TECHNICAL CHARACTERISTICS

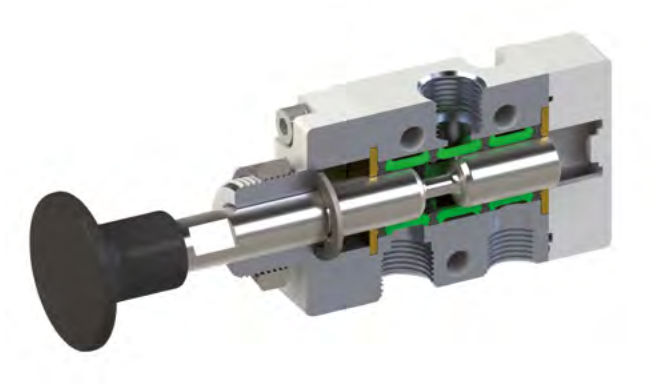

		1/8	1/4
THREAD		G 1/8 NPTF 1/8	G 1/4 NPTF 1/4
6 bar FLOW RATE with Δp 1 bar		740 Nl/min	1200 Nl/min
OPERATING PRESSURE		Vacuum ÷ 145 psi (Vacuum ÷ 10 bar)	
TEMPERATURE	min	14 °F -10 °C	
	max	140 °F 60 °C	
PANEL MOUNT		M 16x1	

Reference Standard

1907/2006 REACH
2011/65/CE RoHS
PED 2014/68/UE
ATEX 2014/34/UE

Component Parts and Materials

Anodized aluminum body
Chemical nickel-plated spool
NBR seals

Series	Actuation	Reactuation	Ways	Function	Size	Thread
0 1 V	T	0	3	N C	0 2	
	T = Button L = 90° Lever F = Front lever	0 = Monostable spring return 1 = Bistable 2 = Stable in 3 positions	3 = 3/2 5 = 5/2 7 = 5/3	NO = Normally open NC = Normally closed CC = All Ports Blocked OC = Cylinder Ports Open to Exhaust PC = Cylinder Ports Pressurized 00 = Function not provided	02 = 1/8 03 = 1/4	= G N = NPTF

BUTTON OPERATED VALVES

3/2

BUTTON OPERATED - SPRING RETURN

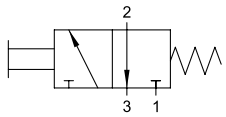

Code	Function	Size	Pack.
01V T0 3 NC 02	3/2 NC	G 1/8	1
01V T0 3 NC 03	3/2 NC	G 1/4	1

Code	Function	Size	Pack.
01V T0 3 NC 02 N	3/2 NC	NPTF 1/8	1
01V T0 3 NC 03 N	3/2 NC	NPTF 1/4	1



3/2

BUTTON OPERATED - PUSH / PULL

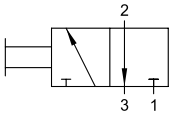

Code	Function	Size	Pack.
01V T1 3 00 02	3/2	G 1/8	1
01V T1 3 00 03	3/2	G 1/4	1

Code	Function	Size	Pack.
01V T1 3 00 02 N	3/2	NPTF 1/8	1
01V T1 3 00 03 N	3/2	NPTF 1/4	1

G 1/8 - NPTF 1/8

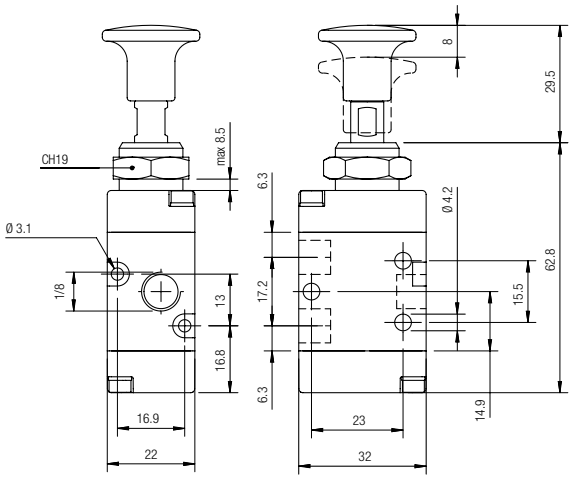

G 1/4 - NPTF 1/4

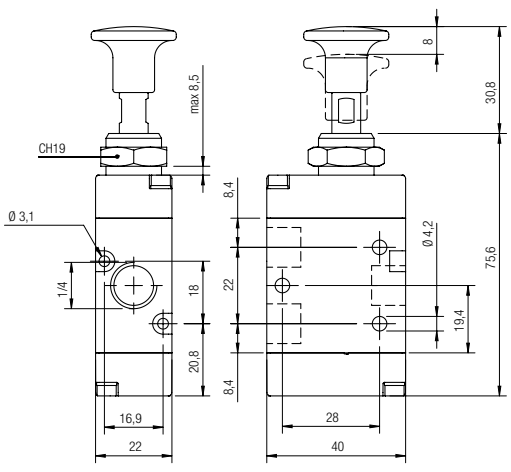

5/2

BUTTON OPERATED - SPRING RETURN

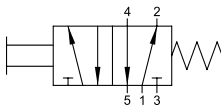

Code	Function	Size	Pack.
01V T0 5 00 02	5/2	G 1/8	1
01V T0 5 00 03	5/2	G 1/4	1

Code	Function	Size	Pack.
01V T0 5 00 02 N	5/2	NPTF 1/8	1
01V T0 5 00 03 N	5/2	NPTF 1/4	1



5/2

BUTTON OPERATED - PUSH / PULL

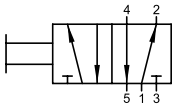

Code	Function	Size	Pack.
01V T1 5 00 02	5/2	G 1/8	1
01V T1 5 00 03	5/2	G 1/4	1

Code	Function	Size	Pack.
01V T1 5 00 02 N	5/2	NPTF 1/8	1
01V T1 5 00 03 N	5/2	NPTF 1/4	1

G 1/8 - NPTF 1/8

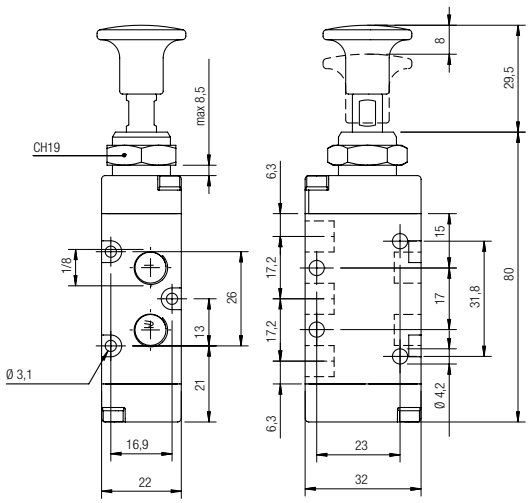

G 1/4 - NPTF 1/4

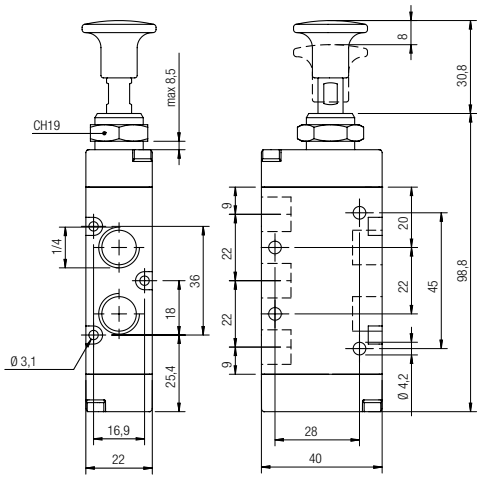

3/2

LEVER OPERATED - SPRING RETURN

90° LEVER OPERATED VALVES

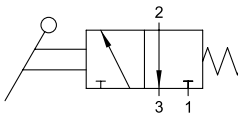

Code	Function	Size	Pack.
01V L0 3 NC 02	3/2 NC	G 1/8	1
01V L0 3 NC 03	3/2 NC	G 1/4	1

Code	Function	Size	Pack.
01V L0 3 NC 02 N	3/2 NC	NPTF 1/8	1
01V L0 3 NC 03 N	3/2 NC	NPTF 1/4	1



3/2

LEVER OPERATED - PUSH / PULL

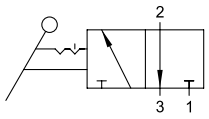

Code	Function	Size	Pack.
01V L1 3 00 02	3/2	G 1/8	1
01V L1 3 00 03	3/2	G 1/4	1

Code	Function	Size	Pack.
01V L1 3 00 02 N	3/2	NPTF 1/8	1
01V L1 3 00 03 N	3/2	NPTF 1/4	1

G 1/8 - NPTF 1/8

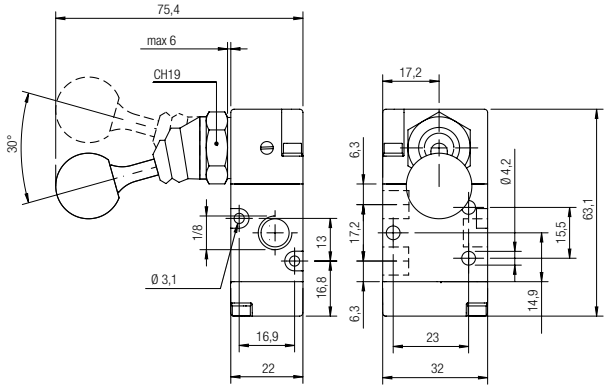

G 1/4 - NPTF 1/4

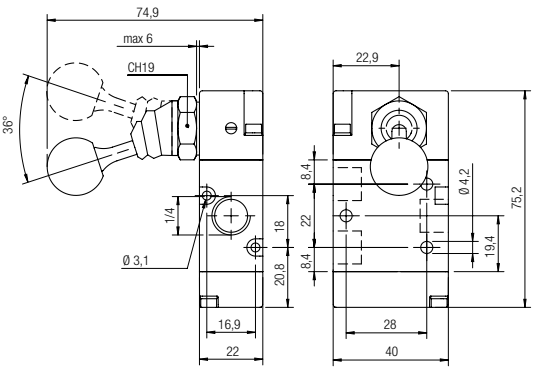

5/2

LEVER OPERATED - SPRING RETURN

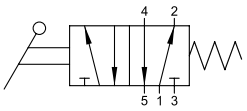

Code	Function	Size	Pack.
01V L0 5 00 02	5/2	G 1/8	1
01V L0 5 00 03	5/2	G 1/4	1

Code	Function	Size	Pack.
01V L0 5 00 02 N	5/2	NPTF 1/8	1
01V L0 5 00 03 N	5/2	NPTF 1/4	1



5/2

LEVER OPERATED - PUSH / PULL

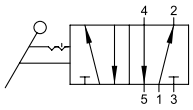

Code	Function	Size	Pack.
01V L1 5 00 02	5/2	G 1/8	1
01V L1 5 00 03	5/2	G 1/4	1

Code	Function	Size	Pack.
01V L1 5 00 02 N	5/2	NPTF 1/8	1
01V L1 5 00 03 N	5/2	NPTF 1/4	1

G 1/8 - NPTF 1/8

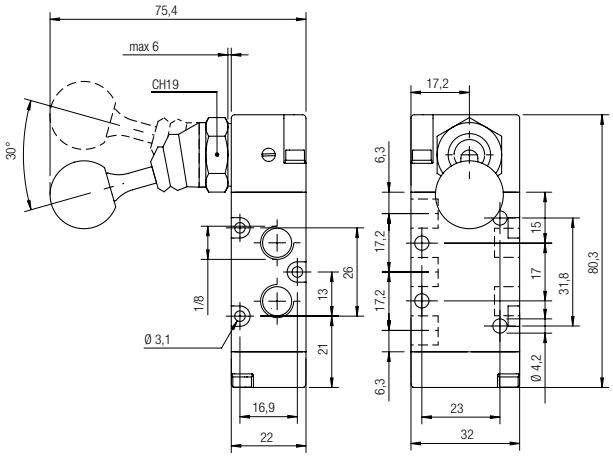

G 1/4 - NPTF 1/4

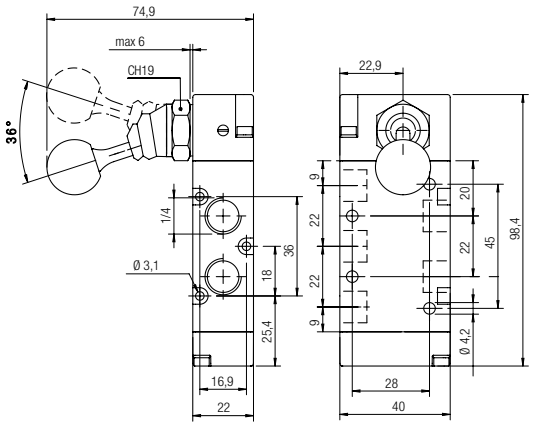

5/3

LEVER OPERATED - SPRING CENTERED

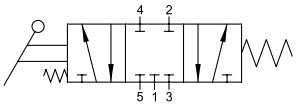

CC

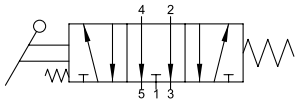

OC

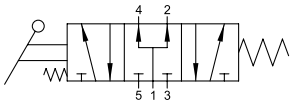

PC

Code	Function	Size	Pack.
01V L0 7 CC 02	5/3 CC	G 1/8	1
01V L0 7 CC 03	5/3 CC	G 1/4	1
01V L0 7 OC 02	5/3 OC	G 1/8	1
01V L0 7 OC 03	5/3 OC	G 1/4	1
01V L0 7 PC 02	5/3 PC	G 1/8	1
01V L0 7 PC 03	5/3 PC	G 1/4	1

Code	Function	Size	Pack.
01V L0 7 CC 02 N	5/3 CC	NPTF 1/8	1
01V L0 7 CC 03 N	5/3 CC	NPTF 1/4	1
01V L0 7 OC 02 N	5/3 OC	NPTF 1/8	1
01V L0 7 OC 03 N	5/3 OC	NPTF 1/4	1
01V L0 7 PC 02 N	5/3 PC	NPTF 1/8	1
01V L0 7 PC 03 N	5/3 PC	NPTF 1/4	1



5/3

LEVER OPERATED - PUSH / PULL

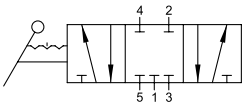

CC

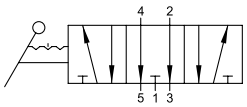

OC

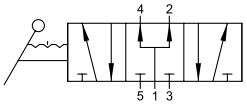

PC

Code	Function	Size	Pack.
01V L2 7 CC 02	5/3 CC	G 1/8	1
01V L2 7 CC 03	5/3 CC	G 1/4	1
01V L2 7 OC 02	5/3 OC	G 1/8	1
01V L2 7 OC 03	5/3 OC	G 1/4	1
01V L2 7 PC 02	5/3 PC	G 1/8	1
01V L2 7 PC 03	5/3 PC	G 1/4	1

Code	Function	Size	Pack.
01V L2 7 CC 02 N	5/3 CC	NPTF 1/8	1
01V L2 7 CC 03 N	5/3 CC	NPTF 1/4	1
01V L2 7 OC 02 N	5/3 OC	NPTF 1/8	1
01V L2 7 OC 03 N	5/3 OC	NPTF 1/4	1
01V L2 7 PC 02 N	5/3 PC	NPTF 1/8	1
01V L2 7 PC 03 N	5/3 PC	NPTF 1/4	1

01V L0 7 CC 02 01V L0 7 OC 02 01V L0 7 PC 02
01V L0 7 CC 02 N 01V L0 7 OC 02 N 01V L0 7 PC 02 N

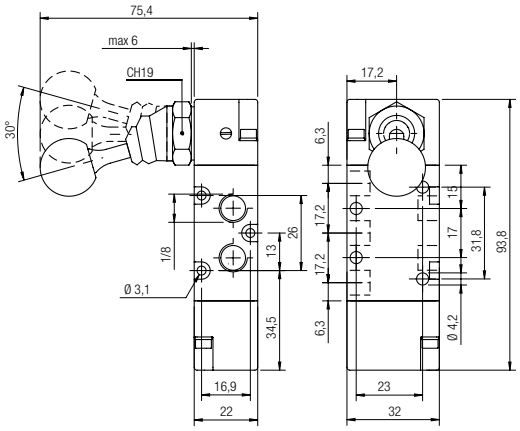

01V L0 7 CC 03 01V L0 7 OC 03 01V L0 7 PC 03
01V L0 7 CC 03 N 01V L0 7 OC 03 N 01V L0 7 PC 03 N

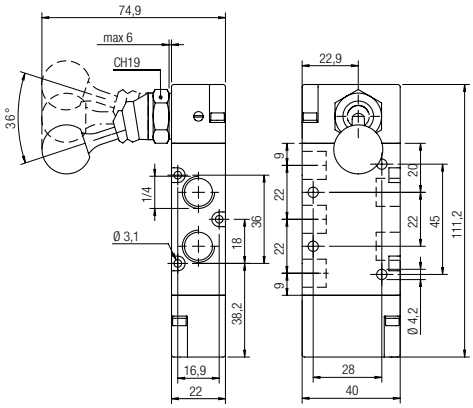

01V L2 7 CC 02 01V L2 7 OC 02 01V L2 7 PC 02
01V L2 7 CC 02 N 01V L2 7 OC 02 N 01V L2 7 PC 02 N

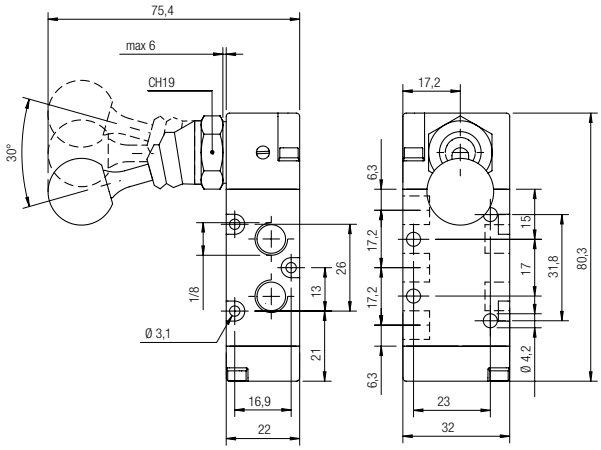

01V L2 7 CC 03 01V L2 7 OC 03 01V L2 7 PC 03
01V L2 7 CC 03 N 01V L2 7 OC 03 N 01V L2 7 PC 03 N

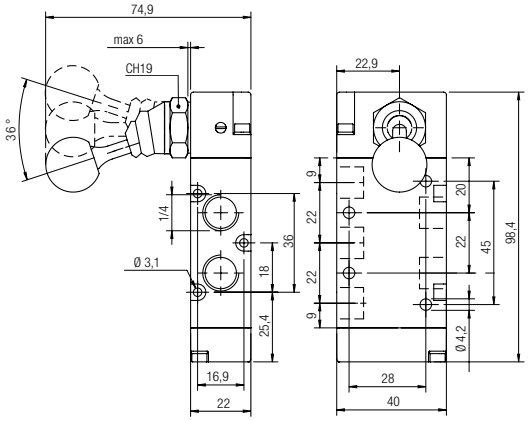

3/2

LEVER OPERATED - SPRING RETURN

FRONT LEVER VALVE

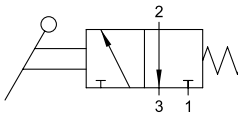

Code	Function	Size	Pack.
01V F1 3 00 02	3/2 NC	G 1/8	1
01V F1 3 00 03	3/2 NC	G 1/4	1



01V F1 3 00 02

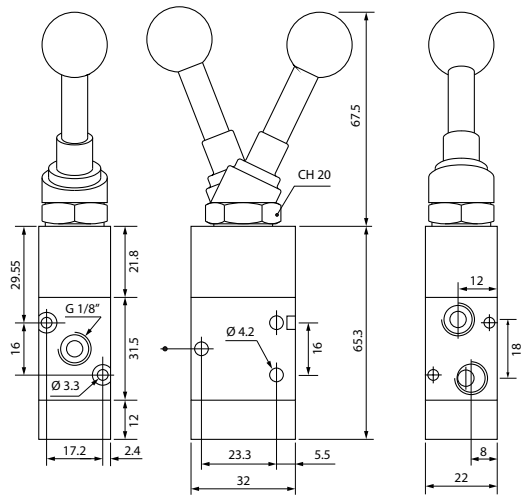

01V F1 3 00 03

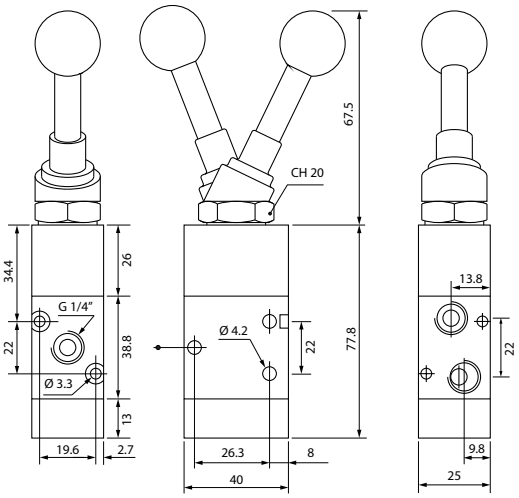

5/2

LEVER OPERATED - SPRING RETURN

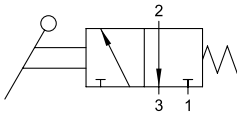

Code	Function	Size	Pack.
01V F1 5 00 02	5/2	G 1/8	1
01V F1 5 00 03	5/2	G 1/4	1



01V F1 5 00 02

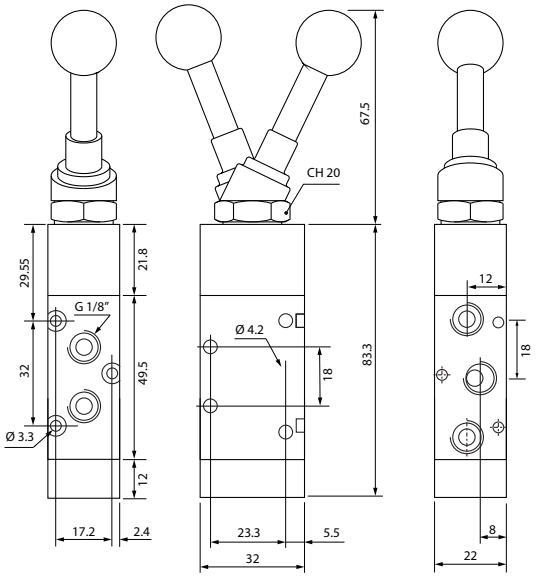

01V F1 5 00 03

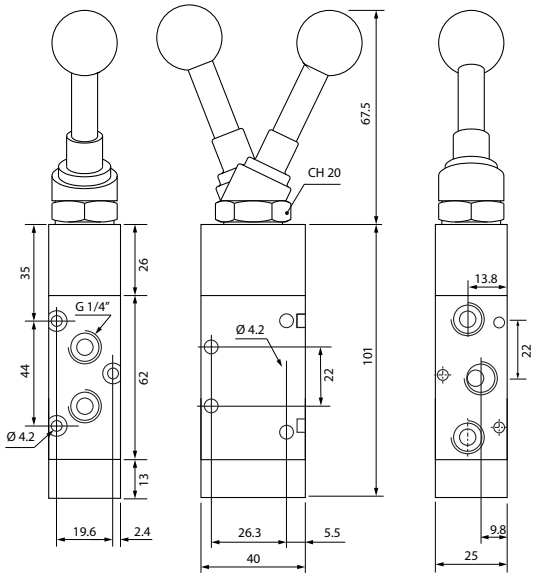

TECHNICAL CHARACTERISTICS

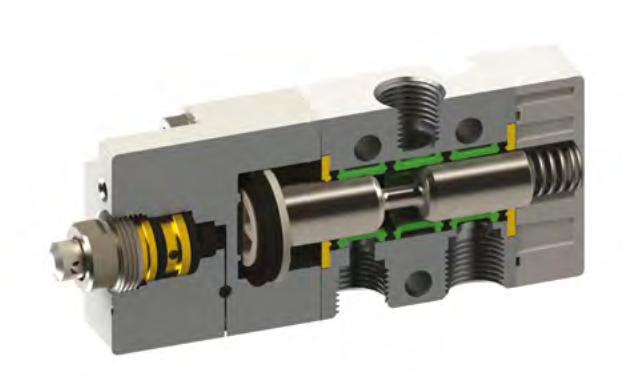

		1/8
THREAD		G 1/8 NPTF 1/8
6 bar FLOW RATE with Δp 1 bar		740 Nl/min
OPERATING PRESSURE		29 ÷ 145 psi (2 ÷ 10 bar)
DRIVING FORCE		5.8 N
TEMPERATURE	min	14 °F -10 °C
	max	140 °F 60 °C

Reference Standard

1907/2006 REACH ✓ | 2011/65/CE RoHS ✓ | PED 2014/68/UE | ATEX 2014/34/UE | II 2GD Ex h IIC T6 Ex

Component Parts and Materials

Anodized aluminum body
Chemical nickel-plated spool
NBR seals

Series	Actuation	Reactuation	Ways	Function	Size	Thread
0 1 V	V	0	3	N C	0 2	
	V = Servo-piloted tappet N = Servo-piloted Whisker	0 = Monostable spring return	3 = 3/2 5 = 5/2	NC = Normally closed 00 = Function not provided	02 = 1/8	= G N = NPTF

3/2

SERVO-PILOTED TAPPET - SPRING RETURN

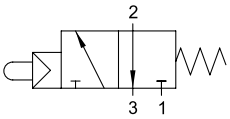

Code	Function	Size	Pack.
01V V0 3 NC 02	3/2 NC	G 1/8	1

Code	Function	Size	Pack.
01V V0 3 NC 02 N	3/2 NC	NPTF 1/8	1

SERVO-PILOTED TAPPET VALVES - SPRING RETURN





5/2

SERVO-PILOTED TAPPET - SPRING RETURN

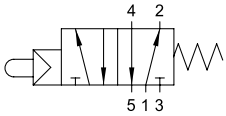

Code	Function	Size	Pack.
01V V0 5 00 02	5/2	G 1/8	1

Code	Function	Size	Pack.
01V V0 5 00 02 N	5/2	NPTF 1/8	1



04V 01 0 00 01



04V 06 0 00 01

01V V0 3 NC 02 01V V0 3 NC 02 N

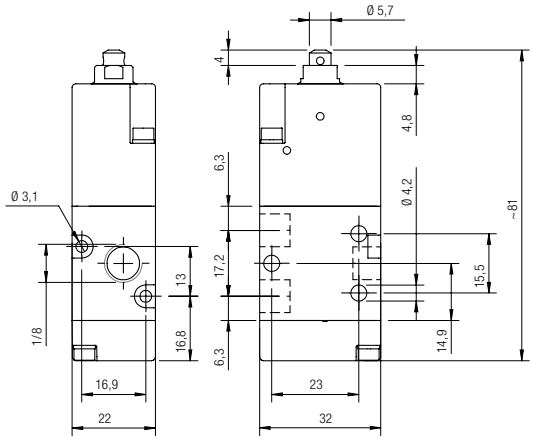

01V V0 5 00 02 01V V0 5 00 02 N

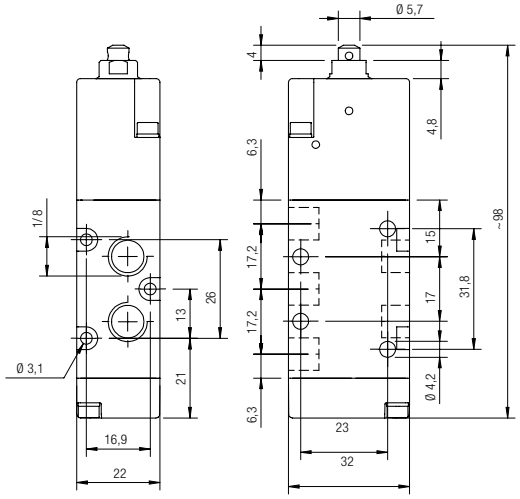

3/2

SERVO-PILOTED WHISKER - SPRING RETURN

SERVO-PILOTED WHISKER - SPRING RETURN VALVES

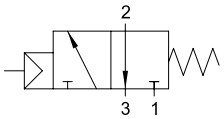

Code	Function	Size	Pack.
01V N0 3 NC 02	3/2 NC	G 1/8	1

Code	Function	Size	Pack.
01V N0 3 NC 02 N	3/2 NC	NPTF 1/8	1



5/2

SERVO-PILOTED WHISKER - SPRING RETURN

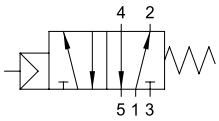

Code	Function	Size	Pack.
01V N0 5 00 02	5/2	G 1/8	1

Code	Function	Size	Pack.
01V N0 5 00 02 N	5/2	NPTF 1/8	1

01V N0 3 NC 02 01V N0 3 NC 02 N

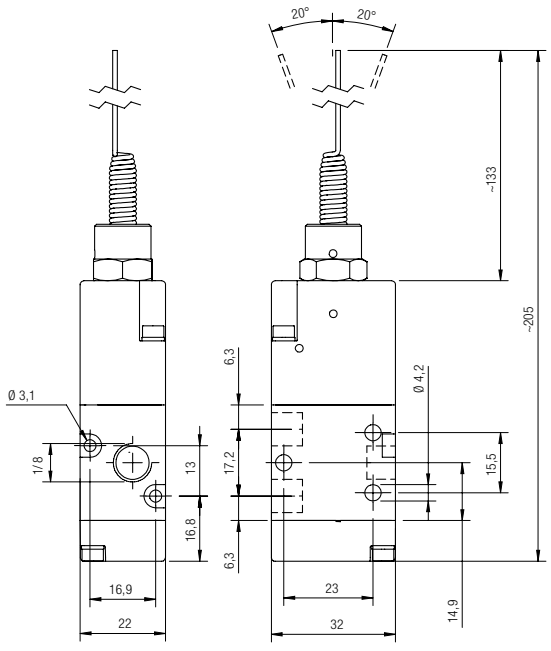

01V N0 5 00 02 01V N0 5 00 02 N

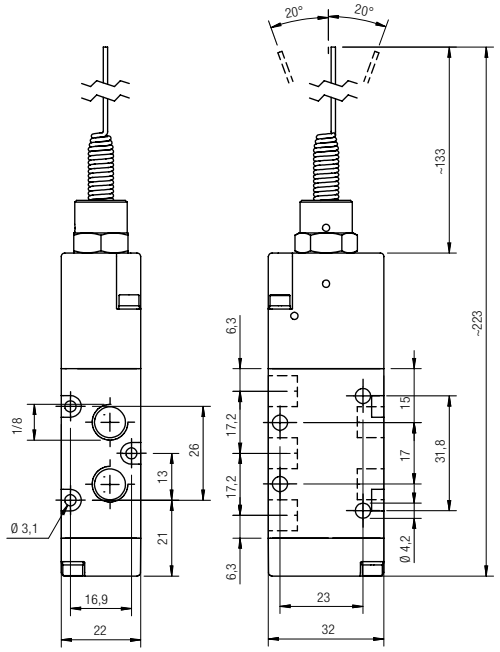

DIN RAIL MOUNTED FIXED LENGTH MANIFOLD BASES - NPTF

The bases are supplied with screws and O-rings for attachment of the valves.

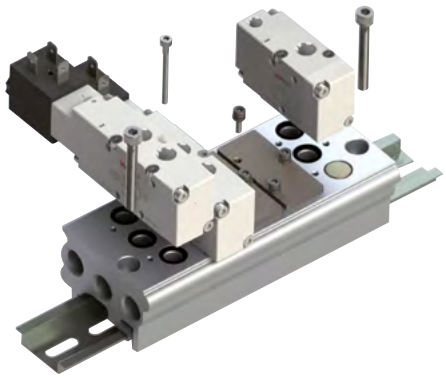

MANIFOLD BASE FOR VALVES 01V - 1/8 NPTF

Code	Stations	L	Pack.
01V B0 0 00 02 N	2	2.992 (76)	1
01V B0 0 00 03 N	3	3.976 (101)	1
01V B0 0 00 04 N	4	4.961 (126)	1
01V B0 0 00 05 N	5	5.945 (151)	1
01V B0 0 00 06 N	6	6.929 (176)	1
01V B0 0 00 07 N	7	7.913 (201)	1
01V B0 0 00 08 N	8	8.898 (226)	1
01V B0 0 00 09 N	9	9.882 (251)	1
01V B0 0 00 10 N	10	10.866 (276)	1

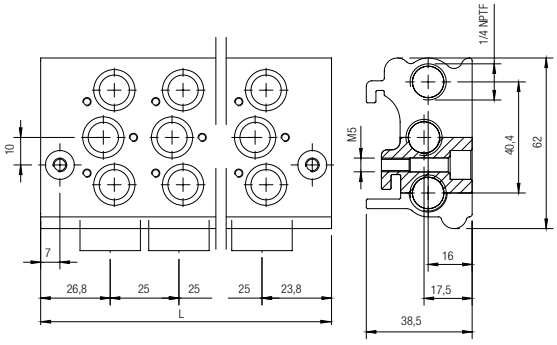

MANIFOLD BASE FOR VALVES 01V - 1/4 NPTF

Code	Stations	L	Pack.
01V B0 1 00 02 N	2	2.992 (76)	1
01V B0 1 00 03 N	3	3.976 (101)	1
01V B0 1 00 04 N	4	4.961 (126)	1
01V B0 1 00 05 N	5	5.945 (151)	1
01V B0 1 00 06 N	6	6.929 (176)	1
01V B0 1 00 07 N	7	7.913 (201)	1
01V B0 1 00 08 N	8	8.898 (226)	1
01V B0 1 00 09 N	9	9.882 (251)	1
01V B0 1 00 10 N	10	10.866 (276)	1

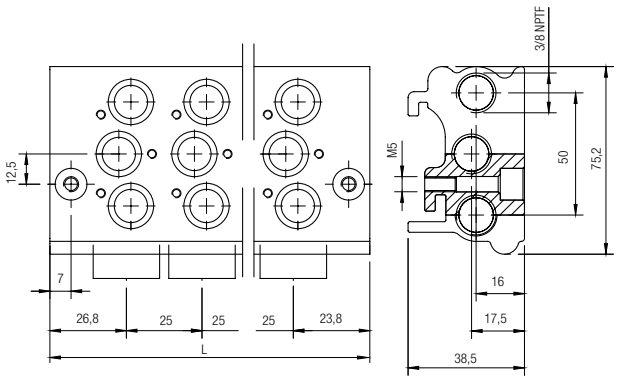

DIN RAIL MOUNTED MODULAR BASES - NPTF

All the bases are supplied with screws and seals to secure the correct assembly.

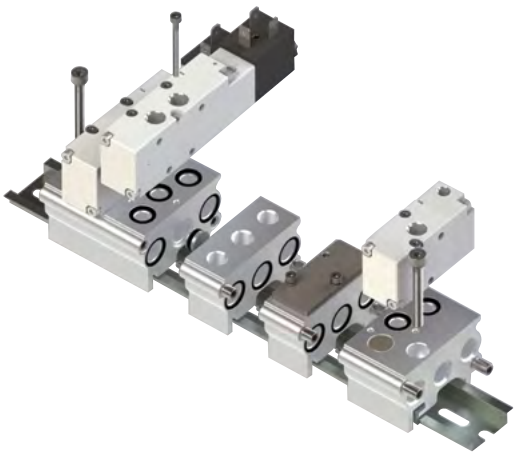

FRONT MANIFOLD END PLATE

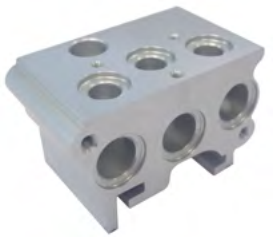

Code	Size	Pack.
01V B1 0 00 00 N	1/8 NPTF	1
01V B1 0 00 01 N	1/4 NPTF	1

REAR MANIFOLD END PLATE



Code	Size	Pack.
01V B2 0 00 00 N	1/8 NPTF	1
01V B2 0 00 01 N	1/4 NPTF	1

MODULAR BASE



Code	Size	Pack.
01V B3 0 00 00 N	1/8 NPTF	1
01V B3 0 00 01 N	1/4 NPTF	1

INTERMEDIATE PRESSURE BASE



Code	Size	Pack.
01V B4 0 00 00 N	1/8 NPTF	1
01V B4 0 00 01 N	1/4 NPTF	1

01V B1 0 00 00 N

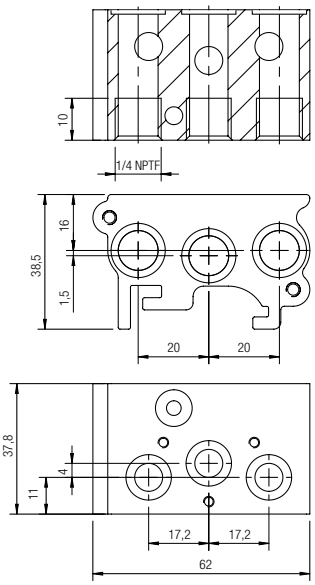

01V B1 0 00 01 N

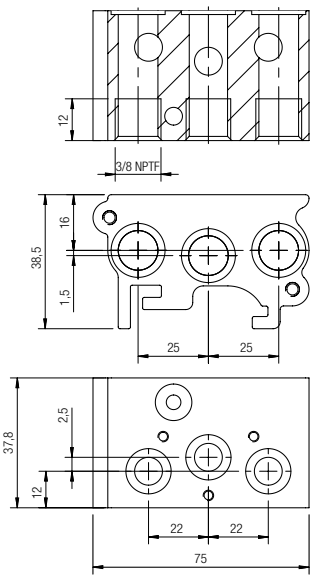

01V B2 0 00 00 N

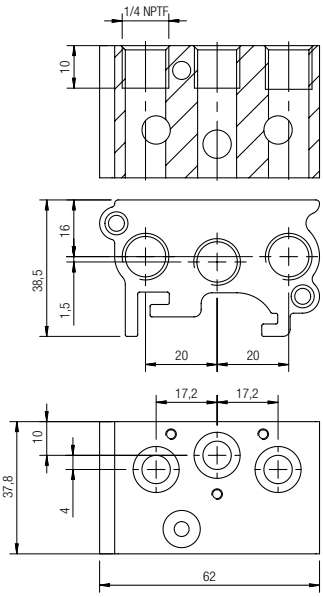

01V B2 0 00 01 N

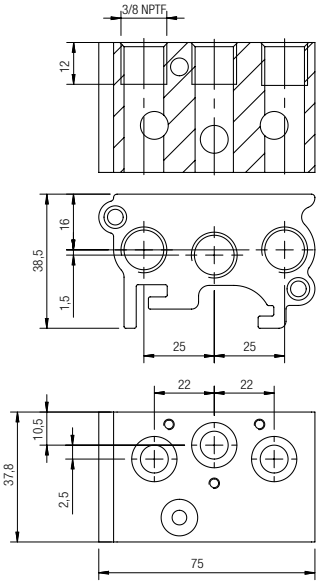

01V B3 0 00 00 N

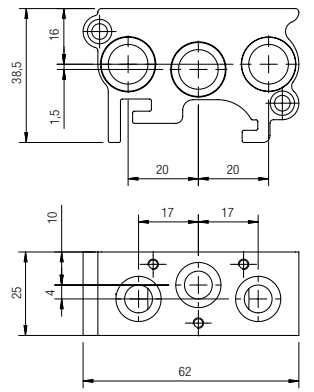

01V B3 0 00 01 N

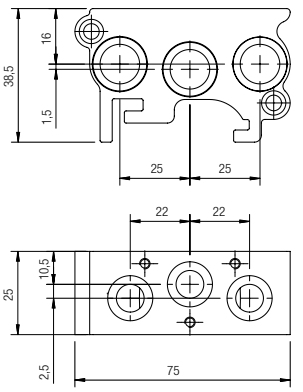

01V B4 0 00 00 N

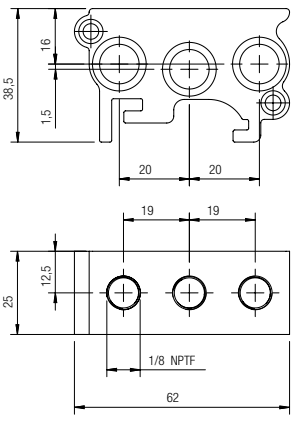

01V B4 0 00 01 N

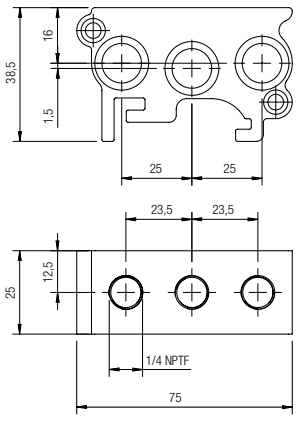

DIN RAIL MOUNTED FIXED LENGTH MANIFOLD BASES

The bases are supplied with screws and O-rings for attachment of the valves.

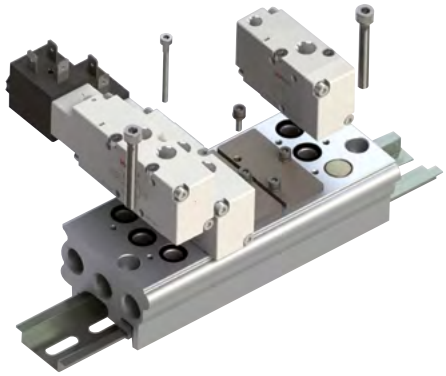

MANIFOLD BASE FOR VALVES 01V - G1/8

Code	Stations	L	Pack.
01V B0 0 00 02	2	2.953 (75)	1
01V B0 0 00 03	3	3.898 (99)	1
01V B0 0 00 04	4	4.843 (123)	1
01V B0 0 00 05	5	5.787 (147)	1
01V B0 0 00 06	6	6.732 (171)	1
01V B0 0 00 07	7	7.677 (195)	1
01V B0 0 00 08	8	8.622 (219)	1
01V B0 0 00 09	9	9.567 (243)	1
01V B0 0 00 10	10	10.512 (267)	1

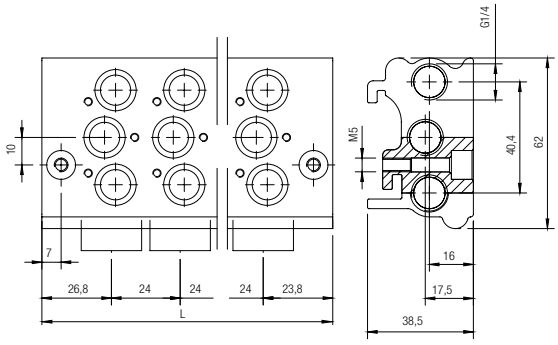

MANIFOLD BASE FOR VALVES 01V - G1/4

Code	Stations	L	Pack.
01V B0 1 00 02	2	2.953 (75)	1
01V B0 1 00 03	3	3.898 (99)	1
01V B0 1 00 04	4	4.843 (123)	1
01V B0 1 00 05	5	5.787 (147)	1
01V B0 1 00 06	6	6.732 (171)	1
01V B0 1 00 07	7	7.677 (195)	1
01V B0 1 00 08	8	8.622 (219)	1
01V B0 1 00 09	9	9.567 (243)	1
01V B0 1 00 10	10	10.512 (267)	1

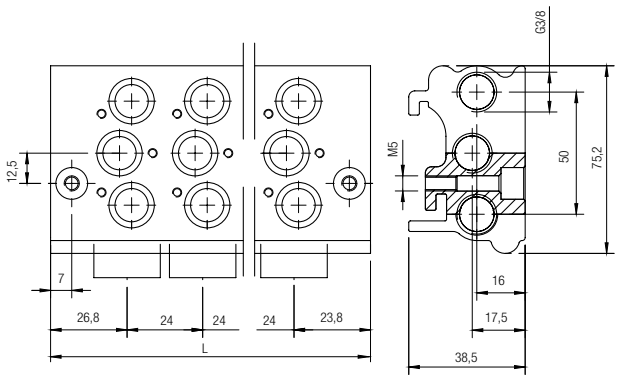

DIN RAIL MOUNTED MODULAR BASES

All the bases are supplied with screws and seals to secure the correct assembly.

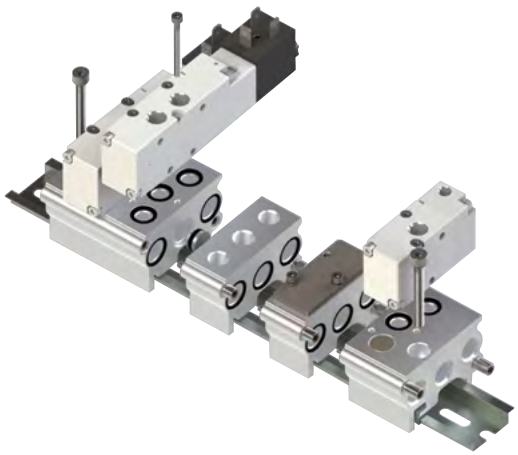

FRONT MANIFOLD END PLATE

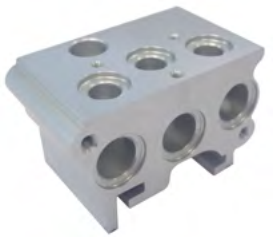

Code	Size	Pack.
01V B1 0 00 00	G 1/8	1
01V B1 0 00 01	G 1/4	1

REAR MANIFOLD END PLATE



Code	Size	Pack.
01V B2 0 00 00	G 1/8	1
01V B2 0 00 01	G 1/4	1

MODULAR BASE



Code	Size	Pack.
01V B3 0 00 00	G 1/8	1
01V B3 0 00 01	G 1/4	1

INTERMEDIATE PRESSURE BASE

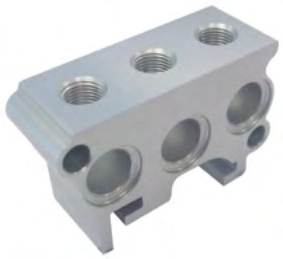

Code	Size	Pack.
01V B4 0 00 00	G 1/8	1
01V B4 0 00 01	G 1/4	1

01V B1 0 00 00

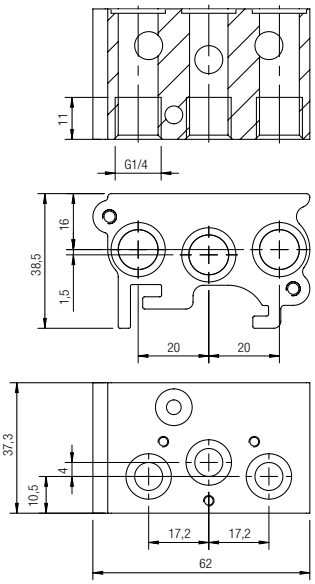

01V B1 0 00 01

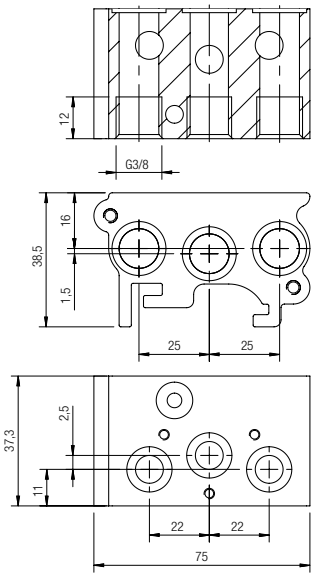

01V B2 0 00 00

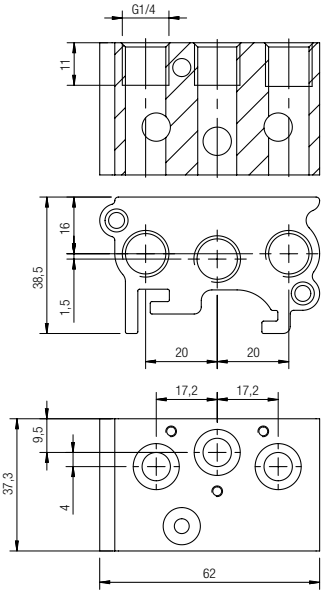

01V B2 0 00 01

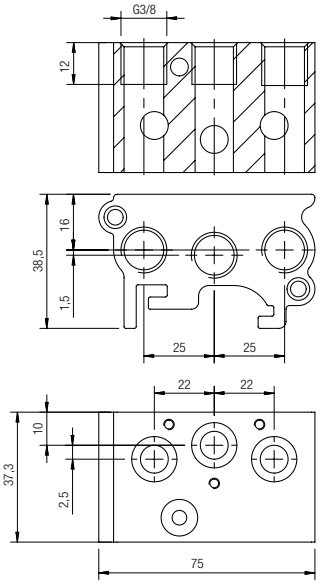

01V B3 0 00 00

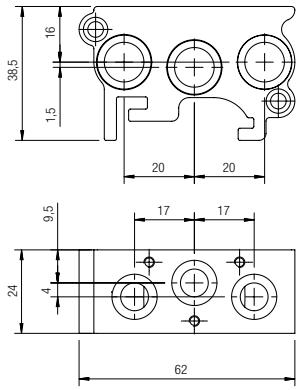

01V B3 0 00 01

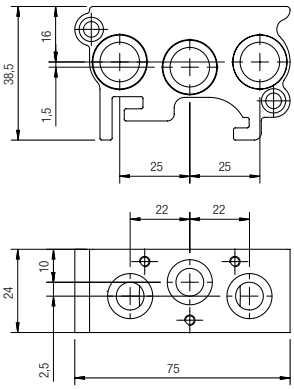

01V B4 0 00 00

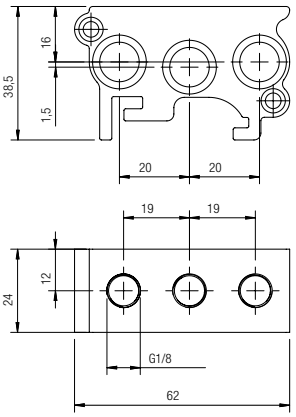

01V B4 0 00 01

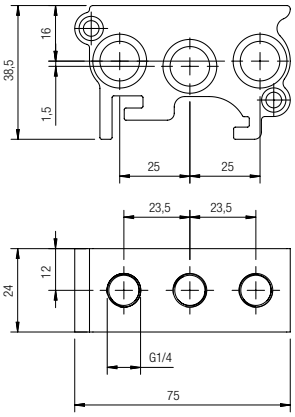

01VB6

PLUG FOR 3 WAY VALVE CONNECTION

Code	Size	A	B	Pack.
01V B6 0 00 00	1/8	.295 (7.5)	.472 (12)	1
01V B6 0 00 01	1/4	.295 (7.5)	.551 (14)	1



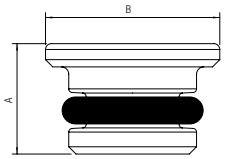

01VB7

OMEGA BAR BRACKET

Code	Size	Pack.
01V B7 0 00 00	1/8 - 1/4	2



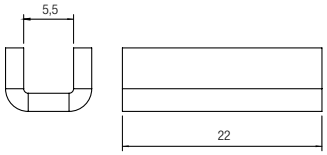

01VB8

INTERMEDIATE STEPS FOR MODULAR BASE

Code	Size	A	B	Pack.
01V B8 0 00 00	1/8	.295 (7.5)	.472 (12)	1
01V B8 0 00 01	1/4	.295 (7.5)	.551 (14)	1



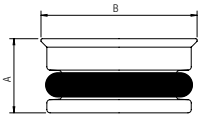

01VB9

COVER PLATE

Code	Size	A	B	Pack.
01V B9 0 00 00	1/8	1.969 (50)	.866 (22)	1
01V B9 0 00 01	1/4	2.441 (62)	.866 (22)	1



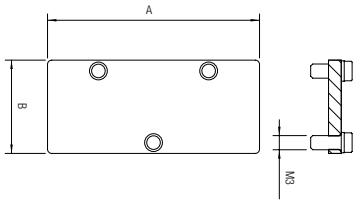

COILS AND CONNECTORS

COILS AND CONNECTORS COMPATIBILITY








		SOLU1	SOL01	SOLX1	SOLX2	U1	U3
		22 mm	22 mm	30 mm	22 mm	22 mm	30 mm
01V		■	■	■	■		
07V		■	■		■		
08V		■	■		■		
AA						■	■
CL-CM						■	
BE							■

SOLU1 COIL

22 mm

9 mm Ø



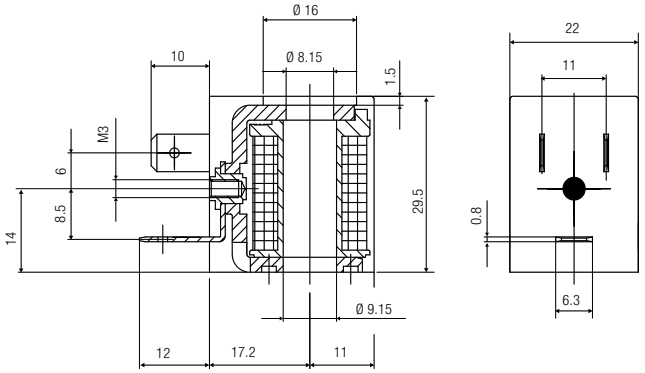

UL 1446 & CSA C22.2

Code	Short Code	Voltage	Power	Voltage tolerance	Ambient temperature	
					Min	Max
SOLU1 012 C 1 000	UA	12V DC	3W	±10 %	-4 °F (-20 °C)	+122 °F (+50 °C)
SOLU1 024 C 1 000	UB	24V DC	3W	±10 %	-4 °F (-20 °C)	+122 °F (+50 °C)
* SOLU1 024 C 3 000	UZ	24V DC	2W	±10 %	-4 °F (-20 °C)	+122 °F (+50 °C)
SOLU1 024 A 2 000	U1	24V AC	5VA	±10 %	-4 °F (-20 °C)	+122 °F (+50 °C)
SOLU1 110 A 2 000	U2	110V AC	5VA	±10 %	-4 °F (-20 °C)	+122 °F (+50 °C)
SOLU1 220 A 2 000	U3	220V AC	5VA	±10 %	-4 °F (-20 °C)	+122 °F (+50 °C)

* Solenoid Recommended (ECO-FRIENDLY), only for 01V - 07V - 08V.

INSULATION CLASS	H CEI EN 60085	ENCAPSULATION MATERIAL	RYNITE®	ELECTRICAL CONNECTIONS	INDUSTRIAL AMP FORM B - INDUSTRIAL *EN 175301-803* *(EX DIN 43650)*
AMBIENT TEMPERATURE	-4 °F +122 °F	PROTECTION DEGREE	IP65 IEC 60529 WITH CONNECTOR IP65	DUTY RATE	ED 100 %

SOL01 COIL

22 mm

9 mm Ø



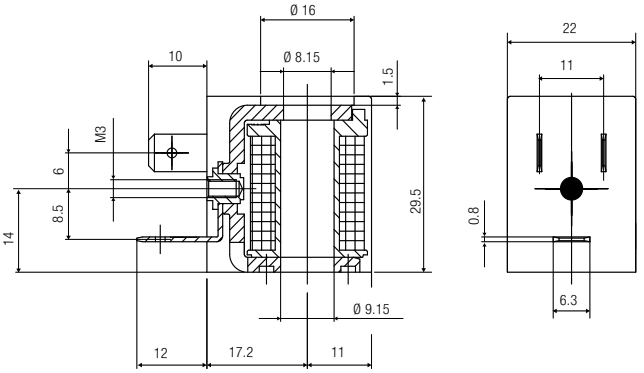

CE

Code	Short Code	Voltage	Power	Voltage tolerance	Ambient temperature	
					Min	Max
SOL01 012 C 1 000	SA	12V DC	3W	±10 %	-4 °F (-20 °C)	+122 °F (+50 °C)
SOL01 024 C 1 000	SB	24V DC	3W	±10 %	-4 °F (-20 °C)	+122 °F (+50 °C)
* SOL01 024 C 3 000	SZ	24V DC	2W	±10 %	-4 °F (-20 °C)	+122 °F (+50 °C)
SOL01 024 A 2 000	S1	24V AC	5VA	±10 %	-4 °F (-20 °C)	+122 °F (+50 °C)
SOL01 110 A 2 000	S2	110V AC	5VA	±10 %	-4 °F (-20 °C)	+122 °F (+50 °C)
SOL01 220 A 2 000	S3	220V AC	5VA	±10 %	-4 °F (-20 °C)	+122 °F (+50 °C)

* Solenoid Recommended (ECO-FRIENDLY), only for 01V - 07V - 08V.

INSULATION CLASS	F CEI EN 60085	ENCAPSULATION MATERIAL	PA	ELECTRICAL CONNECTIONS	INDUSTRIAL AMP FORM B - INDUSTRIAL *EN 175301-803* *(EX DIN 43650)*
AMBIENT TEMPERATURE	-4 °F +122 °F	PROTECTION DEGREE	IP65 IEC 60529 WITH CONNECTOR IP65	DUTY RATE	ED 100 %

SOLX1 COIL

22 mm

9 mm Ø



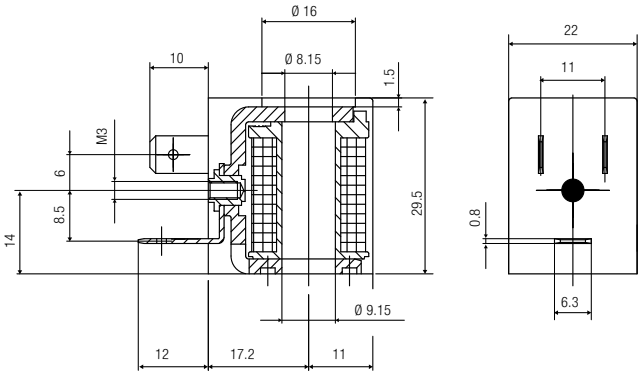

II 3G Ex nA IIC T5 Gc | II 3D Ex tc IIIC 95 °C Dc

Code	Short Code	Voltage	Power	Voltage tolerance	Ambient temperature	
					Min	Max
SOLX1 012 C 1 000	WA	12V DC	3W	±10 %	+5 °F (-15 °C)	+122 °F (+50 °C)
SOLX1 024 C 1 000	WB	24V DC	3W	±10 %	+5 °F (-15 °C)	+122 °F (+50 °C)
SOLX1 024 A 2 000	W1	24V AC	5VA	±10 %	+5 °F (-15 °C)	+122 °F (+50 °C)

INSULATION CLASS	F CEI EN 60085
ENCAPSULATION MATERIAL	PA
ELECTRICAL CONNECTION	INDUSTRIAL AMP FORM B - INDUSTRIAL *EN 175301-803* *(EX DIN 43650)*
AMBIENT TEMPERATURE	+5 °F +122 °F
PROTECTION DEGREE	IP65 IEC 60529 WITH CONNECTOR IP65
DUTY RATE	ED 100 %

SOLX2 COIL

30 mm

9 mm Ø



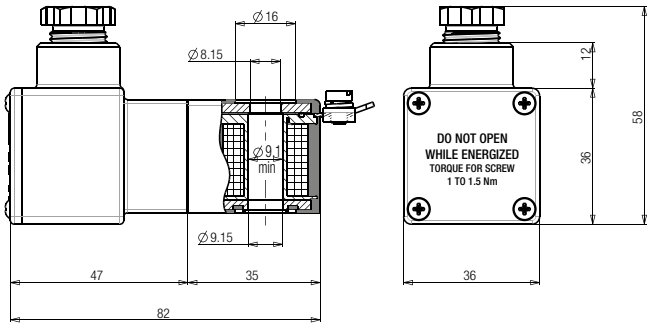

II 2G Ex db mb IIC T5 Gb | II 2D Ex tb IIIC T5 Db

Code	Short Code	Voltage	Power	Voltage tolerance	Ambient temperature	
					Min	Max
SOLX2 012 C 1 000	RA	12V DC	3W	±10 %	-58 °F (-50 °C)	+122 °F (+50 °C)
SOLX2 024 C 1 000	RB	24V DC	3W	±10 %	-58 °F (-50 °C)	+122 °F (+50 °C)
SOLX2 024 A 2 000	R1	24V AC	4,8VA	±10 %	-58 °F (-50 °C)	+122 °F (+50 °C)
SOLX2 110 A 2 000	R2	110V AC	4,8VA	±10 %	-58 °F (-50 °C)	+122 °F (+50 °C)
SOLX2 220 A 2 000	R3	220V AC	4,8VA	±10 %	-58 °F (-50 °C)	+122 °F (+50 °C)

Do not use with 01VB bases

With 08V NAMUR valves use the 08V01 spacer

INSULATION CLASS	F CEI EN 60085	ENCAPSULATION MATERIAL	PA	ELECTRICAL CONNECTIONS	PG9
AMBIENT TEMPERATURE	-58 °F +122 °F	PROTECTION DEGREE	IP66 IEC 60529	DUTY RATE	ED 100 %

COILS

CSA/UL

Possibility of replacement without intervention in the pneumatic circuit
Other voltages available upon request
360° rotation on the pilot. Coil winding: H class
Ambient temperature: +14 ÷ +113 °F. Fluid temperature: +14 ÷ +203 °F.
The solenoid valves functioning with 100V-230V must be incorporated (EN60204-1)
Under continuous service a maximum temperature will not compromise the functioning of the coil provided that the working position is ventilated.
Protection class IP65, if used with connector.

COILS U1

22 mm

10 mm Ø



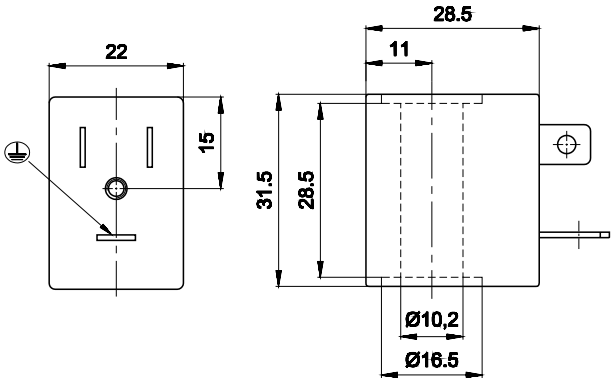

Code	Duty cycle ED (a) %	Power consumption W		Tolerance tension %	Rated voltage	Weight lb (Kg)
		Hold	Inrush			
UDA 0050	100	3,5	3,5	±10	12 V DC	0.13 (0.06)
UDA 0051	100	3,5	3,5	±10	24 V DC	0.13 (0.06)
UDA 0106	100	5,4 VA (Max)	7,8 VA (Max)	±10	24 V AC/50-60 HZ	0.13 (0.06)
UDA 0108	100	5,4 VA (Max)	7,8 VA (Max)	±10	110 V AC/50-60 HZ	0.13 (0.06)
UDA 0124	100	5,4 VA (Max)	7,8 VA (Max)	±10	230 V AC/50-60 HZ	0.13 (0.06)

COILS U3

30 mm

10 mm Ø

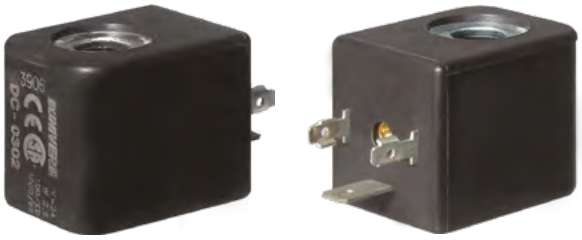

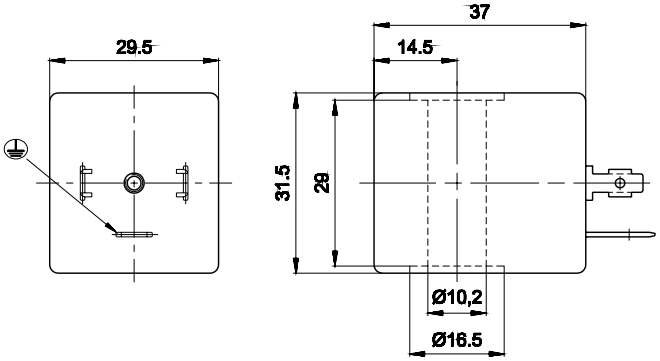

Code	Duty cycle ED (a) %	Power consumption W		Tolerance tension %	Rated voltage	Weight lb (Kg)
		Hold	Inrush			
UDC 0301	100	2,5	2,5	±10	12 V DC	0.18 (0.08)
UDC 0302	100	2,5	2,5	±10	24 V DC	0.18 (0.08)
UDC 0307	100	3,3 VA (Max)	5 VA (Max)	±10	24 V AC/50-60 HZ	0.18 (0.08)
UDC 0309	100	3,3 VA (Max)	5 VA (Max)	±10	110 V AC/50-60 HZ	0.18 (0.08)
UDC 0310	100	3,3 VA (Max)	5 VA (Max)	±10	230 V AC/50-60 HZ	0.18 (0.08)

(a) = 110V - 230V solenoid valves must be built-in (EN-60204-1)
Under continuous service a maximum temperature will not compromise the functioning of the coil provided that the working position is ventilated

CON01 - CONU1 CONNECTOR

22 mm





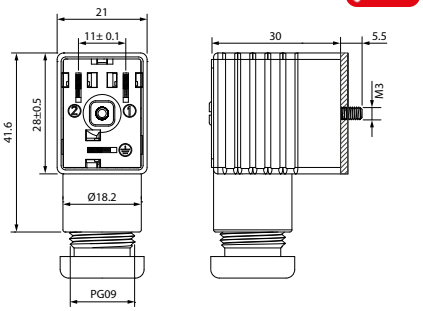

c UL us





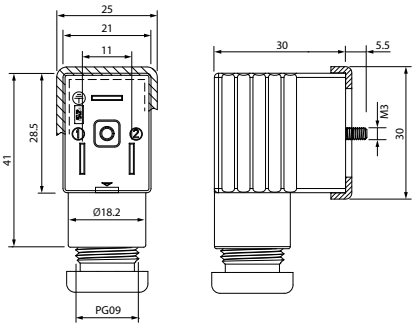

	Code		Size	Color	Characteristics
	CON01 000 01		.866 (22 mm)	BLACK	2 PINS
	CON02 024 00		.866 (22 mm)	TRANSPARENT	LED + VDR 0 - 24V
	CON02 110 00		.866 (22 mm)	TRANSPARENT	LED + VDR 110V
	CON02 250 00		.866 (22 mm)	TRANSPARENT	LED + VDR 220V
*	CONU1 000 01	c UL us	.866 (22 mm)	BLACK	2 PINS
*	CONU2 024 00	c UL us	.866 (22 mm)	TRANSPARENT	LED + VDR 0 - 24V
*	CONU2 110 00	c UL us	.866 (22 mm)	TRANSPARENT	LED + VDR 110V
*	CONU2 250 00	c UL us	.866 (22 mm)	TRANSPARENT	LED + VDR 220V

*: UL 1977 AND CAN/CSA C22.2 NO. 182.3

VDR: Fitted with varistors as surge protection device.

Wiring

CON01 000 01
CONU1 000 01

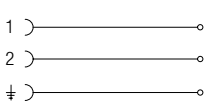

CON02 024 00 CON02 110 00 CON02 250 00
CONU2 024 00 CONU2 110 00 CONU2 250 00

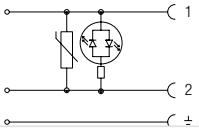

ELECTRICAL CONNECTION	INDUSTRIAL AMP FORM B - INDUSTRIAL *EN 175301-803 (EX DIN 43650)*	PROTECTION DEGREE	IP67 IEC 60529
CABLE DIAMETER	1/4 ÷ 5/16 (6 ÷ 8 mm)		

CONX1 CONNECTOR

22 mm



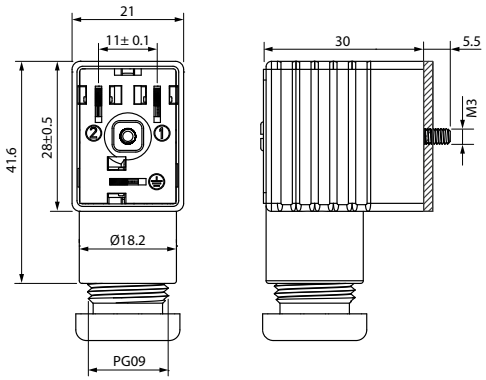

II 2G Ex e IIC T6 Gb | II 2D Ex tb IIIC T85°C Db

Code	Size	Color	Characteristics
CONX1 000 01	.866 (22 mm)	BLACK	2 PINS

Wiring

CONX1 000 01



ELECTRICAL CONNECTIONS	INDUSTRIAL AMP FORM B - INDUSTRIAL *EN 175301-803 (EX DIN 43650)*	PROTECTION DEGREE	IP67 IEC 60529	CABLE DIAMETER	1/4 ÷ 5/16 (6 ÷ 8 mm)

CON3 - CONU3 CONNECTOR

30 mm





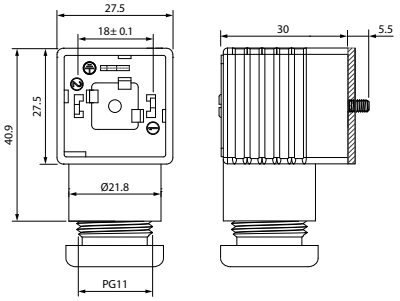

c UL us





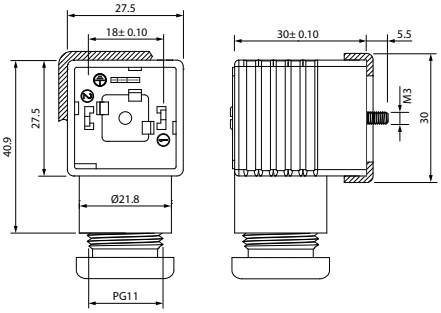

		Size	Color	Characteristics
	CON31 000 01	30 - 36 mm	BLACK	2 PINS
	CON32 024 00	30 - 36 mm	TRANSPARENT	LED + VDR 0 - 24V
	CON32 110 00	30 - 36 mm	TRANSPARENT	LED + VDR 110V
	CON32 250 00	30 - 36 mm	TRANSPARENT	LED + VDR 220V
*	CONU3 100 01	30 - 36 mm	BLACK	2 PINS
*	CONU3 202 40	30 - 36 mm	TRANSPARENT	LED + VDR 0 - 24V
*	CONU3 211 00	30 - 36 mm	TRANSPARENT	LED + VDR 110V
*	CONU3 225 00	30 - 36 mm	TRANSPARENT	LED + VDR 220V

*: UL 1977 AND CAN/CSA C22.2 NO. 182.3

VDR: Fitted with varistors as surge protection device.

Wiring

CON31 000 01
CONU3 100 01

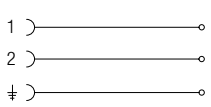

CON32 024 00 CON32 110 00 CON32 250 00
CONU3 202 40 CONU3 211 00 CONU3 225 00

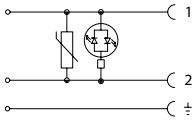

ELECTRICAL CONNECTIONS	**FORM A** *EN 175301-803 (EX DIN 43650)*	PROTECTION DEGREE	**IP67 IEC 60529**
CABLE DIAMETER	**6 ÷ 8 MM & 8 ÷ 11 MM**		