AIGNEP

Poppet Valves Series

G1/8 ÷ G1 1/2 Poppet Valves for Compressed Air



AF

Pg. 19.3

G1/8 ÷ G1 1/2 Poppet Valves for Vacuum



AG

Pg. 19.13

Mixed Threaded Valves G1/8 - G 1/4 - G1/2



AC

Pg. 19.25

Namur Valves



AC-N

Pg. 19.35

Solenoids and Connectors



Coils & Connectors

Pg. 19.41

Click here to view the Poppet Valves Series on our Website

AIGNEP

AIGNEP

POPPET VALVES



Poppet Valves Series

AG - POPPET VALVES

The AG series valves are based on a proven shutter system introduced in 1973, offering high reliability and consistent long-term performance.
Designed for demanding industrial applications, they provide fast switching and long service life, even in harsh operating environments, helping to reduce downtime and maintenance requirements.

WIDE RANGE

1/8" ÷ 1 1/2" 2/2 - 3/2 NC-NO

VACUUM VERSION

Also available with vacuum actuation



		AG m3/h Vacuum
	1/8" (Ø 5,5)	1,5
	1/4" (Ø 8)	4
	3/8" (Ø 10)	10
	1/2" (Ø 15)	20
	3/4" (Ø 19)	35
	1" (Ø 25)	90
	1 1/2" (Ø 39)	180

Original poppet valve system since 1973



SERIES AG - POPPET VALVES FOR VACUUM

Shutter valves for compressed air 1/8" – 1/4" – 3/8" – 1/2" – 3/4" – 1" – 1 1/2"

- Original Univer shutter system, recognized by the market over the years
- Air-operated version
- A complete range of solenoid and vacuum servo valves with 1/8" ÷ 1 1/2" ports to meet all requirements
- The internal shutter system ensures reliability and long service life

Fluid	Filtered air 50 µm, with or without lubrication - vacuum
Temperature Ambient	Max 122 °F (50 °C)
Temperature fluid	23 ÷ 140 °F (-5 ÷ 60 °C)
Commutation system	Poppet
Ways/Positions	2/2 NC (on request), 3/2 NC, 3/2 NO, 3/2 NC-NO
Control	Indirect with air or vacuum
Return	Automatic with vacuum
Manual override	Impulse screw-operated, 2 positions
Valve Body	Zamak (1/8" to 1"), Aluminum (1 1/2") BSPP version upon request
Seals	Vacuum valve, air-operated (conical polyurethane shutters and Vulkollan diaphragm)
	Direct vacuum valve, vacuum-operated (silicone shutters)
Operators	Zamak (1/8" to 1"), Aluminum (1 1/2")
Spool	Aluminum (1/8" to 3/8"), steel + plastic (1/2" to 1 1/2")
Voltage	12 V DC - 24 V DC - 24 V AC - 110 V AC - 230 V AC

Reference standard

II 2G Ex h IIC T5 Gb

II 2D Ex h IIIC T100°C Db

II 3 GD c nA II T5 -10 °C ≤ Ta ≤ 45 °C IP65



CHARACTERISTICS							
Connections	1/8"	1/4"	3/8"	1/2"	3/4"	1"	1 1/2"
Nominal bore inch (mm)	.217 (5.5)	.315 (8)	.394 (10)	.591 (15)	.748 (19)	.984 (25)	1.535 (39)
Vacuum flow rate (m^3/h)	1.5	4	10	20	35	90	180
Electropilot	AA	AB					
Coil	U1 - DA	U2 - DB					
Power consumption	3,5 W (DC) - 5 VA (AC)	11 W (DC) - 10 VA (AC)					
Connector	CONU 1	CONU 3					

3/2 SOLENOID VALVE FOR VACUUM WITH EXTERNAL PILOT AIR SUPPLY



1/8″

UAG 3001

UAG 3002



1/4″

UAG 3009

UAG 3010

3/8″

UAG 3011

UAG 3012

Code	Way	Thread	Control	Return	Ø	Resp. Time (ms)		Min. control pressure	Pump	Max vacuum		Weight	Coil	
			12	10	inch (mm)	Ecc.	Dis.	psi (bar)	max m³/h	mm Hg	Torr	lb (Kg)		
UAG 3001	3/2 NC	1/8″	electric amplified	mechanical spring	.217 (5.5)	14	25	22 (1.5)	1,5	759,5	0,5	0.55 (0.25)	**U1**	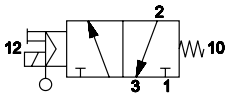
UAG 3009		1/4″	electric amplified	mechanical spring	.315 (8)	16	27	36 (2.5)	4	759,5	0,5	1.28 (0.58)	**U2**	
UAG 3011		3/8″	electric amplified	mechanical spring	.394 (10)	16	27	36 (2.5)	10	759,5	0,5	1.23 (0.56)	**U2**	
UAG 3002	3/2 NO	1/8″	electric amplified	mechanical spring	.217 (5.5)	14	25	22 (1.5)	1,5	759,5	0,5	0.55 (0.25)	**U1**	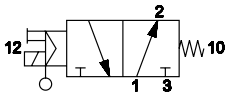
UAG 3010		1/4″	electric amplified	mechanical spring	.315 (8)	16	27	36 (2.5)	4	759,5	0,5	1.28 (0.58)	**U2**	
UAG 3012		3/8″	electric amplified	mechanical spring	.394 (10)	16	27	36 (2.5)	10	759,5	0,5	1.23 (0.56)	**U2**	

N = NPT
= BSPP

1/8″

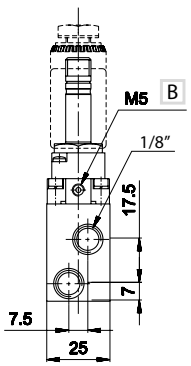

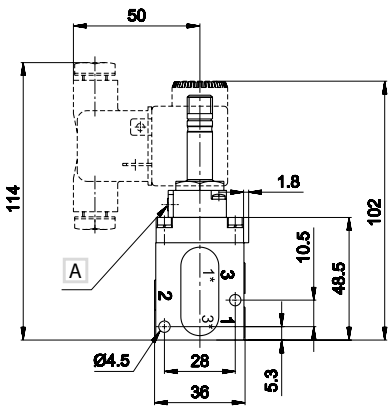

1 = Supply port (vacuum)
2 = Use
3 = Exhaust

A Manual override

B Supply port for external servoassistance of the pilot

1/4″ - 3/8″

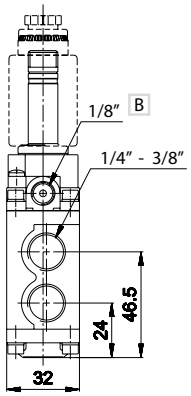

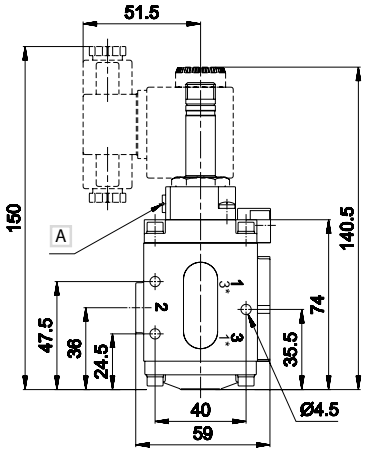

1 = Supply port (vacuum)
2 = Use
3 = Exhaust

A Manual override

B Supply port for external servoassistance of the pilot

Electrovalves are supplied without coil and connector

3/2 SOLENOID VALVE FOR VACUUM WITH EXTERNAL PILOT AIR SUPPLY



1/2″	3/4″	1″
UAG 3020	UAG 3040	UAG 3050
UAG 3021	UAG 3041	UAG 3051



1 1/2″
UAG 3062
UAG 3063

Code	Way	Spool	Control 12	Return 10	Ø inch (mm)	Resp. Time (ms) Ecc.	Resp. Time (ms) Dis.	Min. control pressure psi (bar)	Pump max m³/h	Max vacuum mm Hg	Max vacuum Torr	Weight lb (Kg)	Coil
UAG 3020	3/2 NC	1/2″	electric amplified	mechanical spring	.591 (15)	16	40	44 (3)	20	759,5	0,5	2.62 (1.19)	U2
UAG 3040	3/2 NC	3/4″	electric amplified	mechanical spring	.748 (19)	16	40	44 (3)	35	759,5	0,5	2.49 (1.13)	U2
UAG 3050	3/2 NC	1″	electric amplified	mechanical spring	.984 (25)	18	42	44 (3)	90	759,5	0,5	3.57 (1.62)	U2
UAG 3062	3/2 NC	1 1/2″	electric amplified	mechanical spring	1.535 (39)	60	38	58 (4)	180	759,5	0,5	4.96 (2.25)	U2
UAG 3021	3/2 NO	1/2″	electric amplified	mechanical spring	.591 (15)	16	40	44 (3)	20	759,5	0,5	2.62 (1.19)	U2
UAG 3041	3/2 NO	3/4″	electric amplified	mechanical spring	.748 (19)	16	40	44 (3)	35	759,5	0,5	2.49 (1.13)	U2
UAG 3051	3/2 NO	1″	electric amplified	mechanical spring	.984 (25)	18	42	44 (3)	90	759,5	0,5	3.57 (1.62)	U2
UAG 3063	3/2 NO	1 1/2″	electric amplified	mechanical spring	1.535 (39)	60	38	58 (4)	180	759,5	0,5	4.96 (2.25)	U2

N = NPT
= BSPP

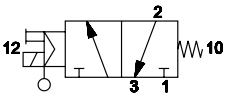

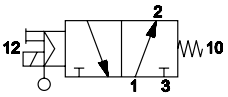

1/2″ - 3/4″ - 1″

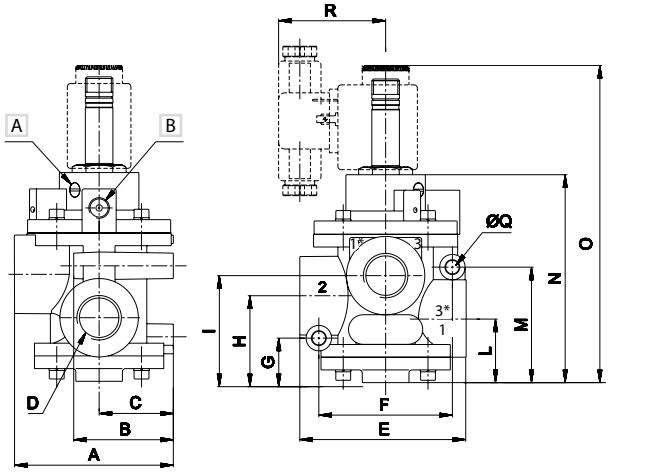

	A	B	C	D	E	F	G	H	I	L	M	N	O	Q	R
1/2″	75	47	35	1/2″	78,5	63	21	41	50,5	30	54,5	100	150	6,4	50,5
3/4″	75	47	35	3/4″	78,5	63	21	41	50,5	30	54,5	100	150	6,4	50,5
1″	89	55	40	1″	101	76	25,5	51	64	38	62,5	115	167	8,4	50

1 = Supply port (vacuum)
2 = Use
3 = Exhaust

A Manual override

B Supply port for external servoassistance of the pilot

1 1/2″

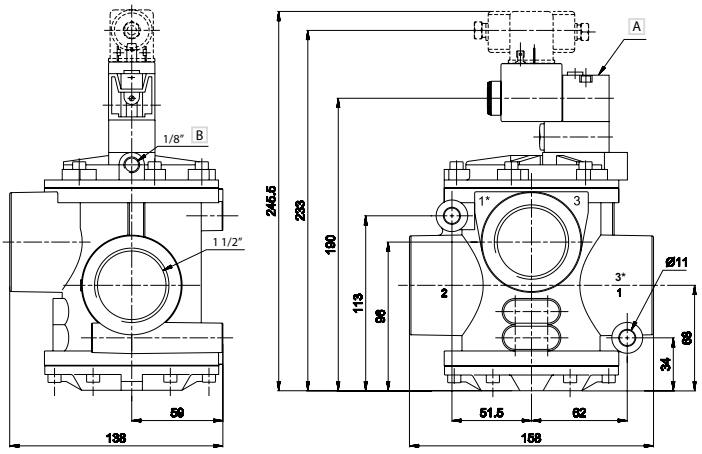

1 = Supply port (vacuum)
2 = Use
3 = Exhaust

A Manual override

B Supply port for external servoassistance of the pilot

Electrovalves are supplied without coil and connector

COILS

CSA/UL

Possibility of replacement without intervention in the pneumatic circuit
Other voltages available upon request
360° rotation on the pilot. Coil winding: H class
Ambient temperature: +14 ÷ +113 °F. Fluid temperature: +14 ÷ +203 °F.
The solenoid valves functioning with 100V-230V must be incorporated (EN60204-1)
Under continuous service a maximum temperature will not compromise the functioning of the coil provided that the working position is ventilated.
Protection class IP65, if used with connector.

U1 22 MM COIL



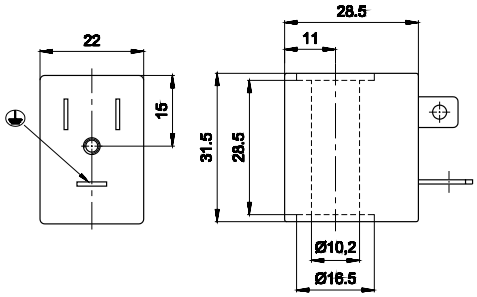

Code	Duty cycle ED (a) %	Power consumption W		Tolerance tension %	Rated voltage	Weight lb (Kg)
		Hold	Inrush			
UDA 0050	100	3,5	3,5	±10	12 V DC	0.13 (0.06)
UDA 0051	100	3,5	3,5	±10	24 V DC	0.13 (0.06)
UDA 0106	100	5,4 VA (Max)	7,8 VA (Max)	±10	24 V AC/50-60 HZ	0.13 (0.06)
UDA 0108	100	5,4 VA (Max)	7,8 VA (Max)	±10	110 V AC/50-60 HZ	0.13 (0.06)
UDA 0124	100	5,4 VA (Max)	7,8 VA (Max)	±10	230 V AC/50-60 HZ	0.13 (0.06)



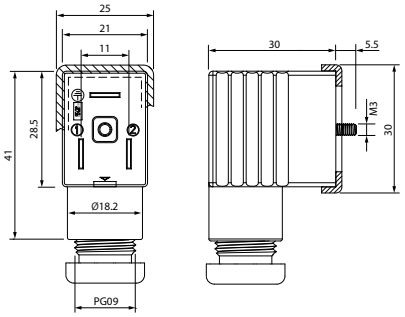

	Code		Size	Color	Characteristics
*	CONU1 000 01		.866 (22 mm)	BLACK	2 PINS
*	CONU2 024 00		.866 (22 mm)	TRANSPARENT	LED + VDR 0 - 24V
*	CONU2 110 00		.866 (22 mm)	TRANSPARENT	LED + VDR 110V
*	CONU2 250 00		.866 (22 mm)	TRANSPARENT	LED + VDR 220V

*: UL 1977 AND CAN/CSA C22.2 NO. 182.3

VDR: Fitted with varistors as surge protection device.

(a) = 110V - 230V solenoid valves must be built-in (EN-60204-1)
Under continuous service a maximum temperature will not compromise the functioning of the coil provided that the working position is ventilated

U2 30 MM COIL



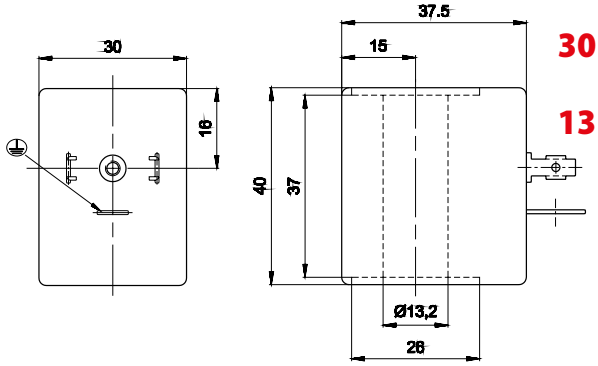

30 mm

13 mm Ø

Code	Duty cycle ED(a) %	Power consumption W Hold	Hold	Tension tolerance %	Rated voltage	Weight lb (Kg)
UDB 0501	100	11	11	±10	12 V DC	0.13 (0.06)
UDB 0502	100	11	11	±10	24 V DC	0.13 (0.06)
UDB 0507	100	10 VA (Max)	16 VA (Max)	±10	24 V AC/50-60 HZ	0.13 (0.06)
UDB 0509	100	10 VA (Max)	16 VA (Max)	±10	110 V AC/50-60 HZ	0.13 (0.06)
UDB 0510	100	10 VA (Max)	16 VA (Max)	±10	230 V AC/50-60 HZ	0.13 (0.06)

(a) = 110V - 230V solenoid valves must be built-in (EN-60204-1)

Under continuous service a maximum temperature will not compromise the functioning of the coil provided that the working position is ventilated



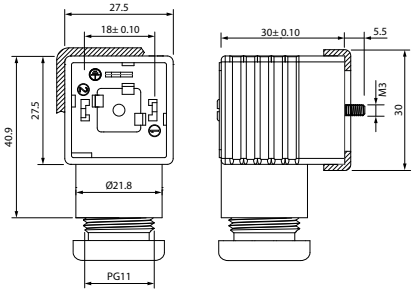

		Size	Color	Characteristics
*	**CONU3 100 01**	30 - 36 mm	BLACK	2 PINS
*	**CONU3 202 40**	30 - 36 mm	TRANSPARENT	LED + VDR 0 - 24V
*	**CONU3 211 00**	30 - 36 mm	TRANSPARENT	LED + VDR 110V
*	**CONU3 225 00**	30 - 36 mm	TRANSPARENT	LED + VDR 220V

*: **UL 1977 AND CAN/CSA C22.2 NO. 182.3**

VDR: Fitted with varistors as surge protection device.

3/2 PNEUMATIC VALVE FOR VACUUM WITH EXTERNAL AIR SUPPLY



1/8″

UAG 3071

UAG 3072



1/4″

UAG 3073

UAG 3074

3/8″

UAG 3075

UAG 3076

Code		Way	Spool	Control 12	Return 10	Ø inch (mm)	Resp. Time (ms) Ecc.	Resp. Time (ms) Dis.	Min. control pressure psi (bar)	Pump max m³/h	Max vacuum mm Hg	Max vacuum Torr	Weight lb (Kg)	
UAG 3071			1/8″	pneumatic amplified	mechanical spring	.217 (5.5)	3	6	22 (1.5)	1,5	759,5	0,5	0.46 (0.21)	
UAG 3073		3/2 NC	1/4″	pneumatic amplified	mechanical spring	.315 (8)	4	8	36 (2.5)	4	759,5	0,5	1.19 (0.54)	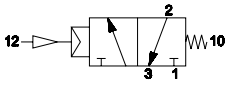
UAG 3075			3/8″	pneumatic amplified	mechanical spring	.394 (10)	4	8	36 (2.5)	10	759,5	0,5	1.15 (0.52)	
UAG 3072	**N** = NPT = BSPP		1/8″	pneumatic amplified	mechanical spring	.217 (5.5)	3	6	22 (1.5)	1,5	759,5	0,5	0.46 (0.21)	
UAG 3074		3/2 NO	1/4″	pneumatic amplified	mechanical spring	.315 (8)	4	8	36 (2.5)	4	759,5	0,5	1.19 (0.54)	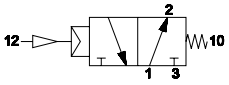
UAG 3076			3/8″	pneumatic amplified	mechanical spring	.394 (10)	4	8	36 (2.5)	10	759,5	0,5	1.15 (0.52)	

1/8″

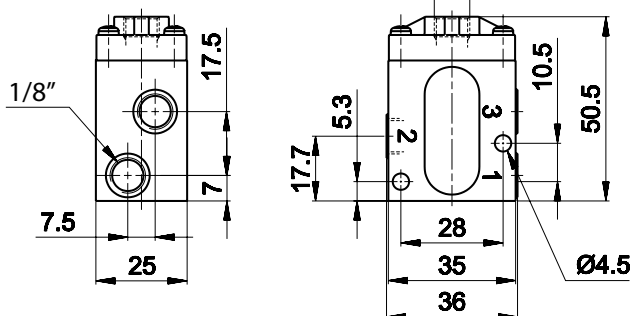

1 = Supply port (vacuum)
2 = Use
3 = Exhaust

1/4″ - 3/8″

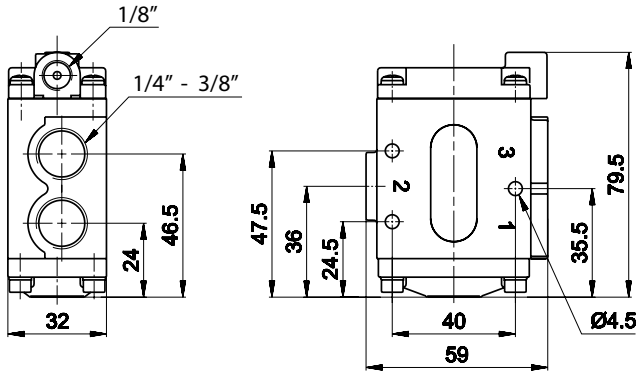

1 = Supply port (vacuum)
2 = Use
3 = Exhaust

3/2 PNEUMATIC VALVE FOR VACUUM WITH EXTERNAL AIR SUPPLY



1/2"	3/4"	1"	1 1/2"
UAG 3081	**UAG 3091**	**UAG 3100**	**UAG 3110**
UAG 3082	**UAG 3092**	**UAG 3101**	**UAG 3111**



Code	Way	Spool	Control 12	Return 10	Ø inch (mm)	Resp. Time (ms) Ecc.	Resp. Time (ms) Dis.	Min. control pressure psi (bar)	Pump max m³/h	Max vacuum mm Hg	Max vacuum Torr	Weight lb (Kg)
UAG 3081	3/2 NC	1/2"	pneumatic amplified	mechanical spring	.591 (15)	6	15	44 (3)	20	759,5	0,5	2.56 (1.16)
UAG 3091		3/4"	pneumatic amplified	mechanical spring	.748 (19)	6	15	44 (3)	35	759,5	0,5	2.43 (1.10)
UAG 3100		1"	pneumatic amplified	mechanical spring	.984 (25)	7	16	44 (3)	90	759,5	0,5	3.51 (1.59)
UAG 3110		1 1/2"	pneumatic amplified	mechanical spring	1.535 (39)	65	25	58 (4)	180	759,5	0,5	4.83 (2.19)
UAG 3082	3/2 NO	1/2"	pneumatic amplified	mechanical spring	.591 (15)	6	15	44 (3)	20	759,5	0,5	2.56 (1.16)
UAG 3092		3/4"	pneumatic amplified	mechanical spring	.748 (19)	6	15	44 (3)	35	759,5	0,5	2.43 (1.10)
UAG 3101		1"	pneumatic amplified	mechanical spring	.984 (25)	7	16	44 (3)	90	759,5	0,5	3.51 (1.59)
UAG 3111		1 1/2"	pneumatic amplified	mechanical spring	1.535 (39)	65	25	58 (4)	180	759,5	0,5	4.83 (2.19)

N = NPT
= BSPP

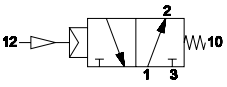

1/2" - 3/4" - 1"

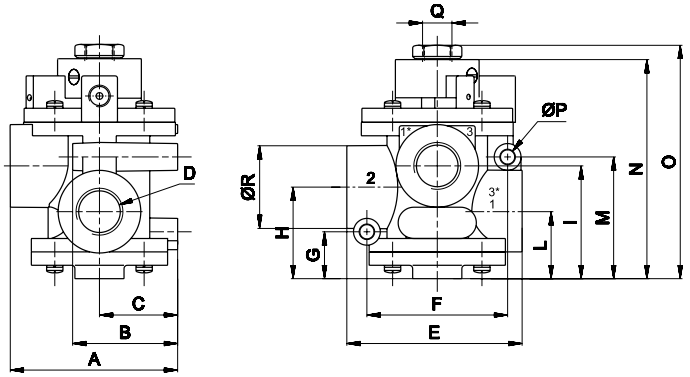

	A	B	C	D	E	F	G	H	I	L	M	N	O	P	Q	R
1/2"	75	47	35	1/2"	78,5	63	21	41	50,5	30	54,5	100	105	6,4	1/4"	37
3/4"	75	47	35	3/4"	78,5	63	21	41	50,5	30	54,5	100	105	6,4	1/4"	37
1"	88,5	55	40	1"	101	76	25,5	51	64	38	62,5	115	120,5	8,4	1/4"	45

1 = Supply port (vacuum)
2 = Use
3 = Exhaust

1 1/2"

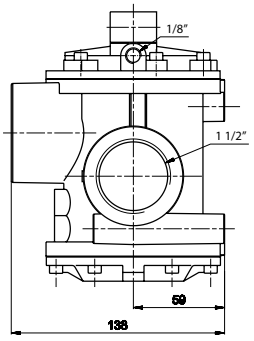

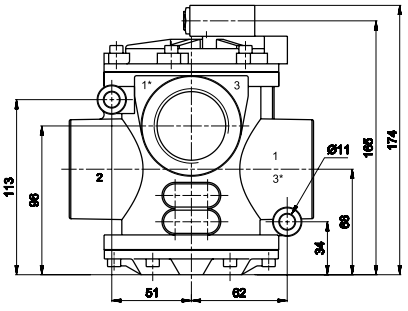

1 = Supply port (vacuum)
2 = Use
3 = Exhaust

3/2 SOLENOID VALVE FOR DIRECT VACUUM WITH PILOT VACUUM SUPPLY



1/4"	3/8"
UAG 3210	UAG 3214
UAG 3211	UAG 3215

Code	Way	Spool	Control	Return	Ø	Resp. Time (ms)		Pump	Min vacuum		Max vacuum		Weight	Coil	
			12	10	inch (mm)	Ecc.	Dis.	max m^3/h	mm Hg	Torr	mm Hg	Torr	lb (Kg)		
UAG 3210	3/2 NC	1/4"	electric amplified	vacuum	.315 (8)	25	16	4	150	610	759,5	0,5	1.15 (0.52)	U2	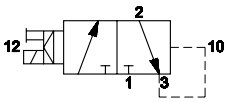
UAG 3214		3/8"	electric amplified	vacuum	.394 (10)	25	16	10	150	610	759,5	0,5	1.23 (0.56)	U2	
UAG 3211	3/2 NO	1/4"	electric amplified	vacuum	.315 (8)	20	14	4	150	610	759,5	0,5	1.28 (0.58)	U2	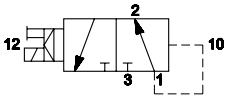
UAG 3215		3/8"	electric amplified	vacuum	.394 (10)	20	14	10	150	610	759,5	0,5	1.23 (0.56)	U2	

N = NPT
= BSPP

1/4" - 3/8"

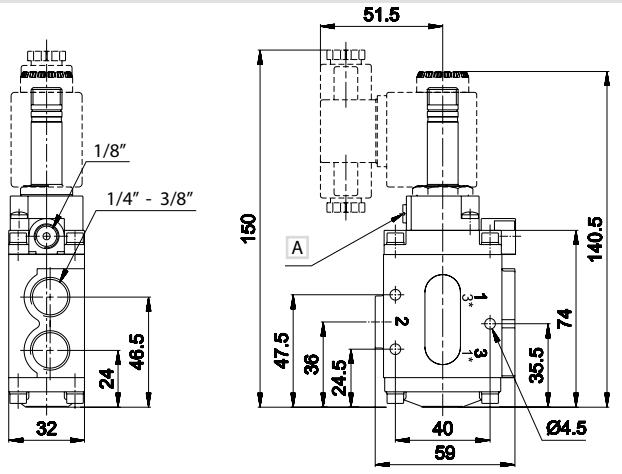

1 = Supply port (vacuum)
2 = Use
3 = Exhaust

A Manual override

B For 1/8" plug

Electrovalves are supplied without coil and connector

3/2 SOLENOID VALVE FOR DIRECT VACUUM WITH PILOT VACUUM SUPPLY



1/2″	3/4″	1″	1 1/2″
UAG 3222	UAG 3232	UAG 3242	UAG 3256
UAG 3223	UAG 3233	UAG 3243	UAG 3257



Code		Way	Spool	Control 12	Return 10	Ø inch (mm)	Resp. Time (ms) Ecc.	Resp. Time (ms) Dis.	Pump max m³/h	Min vacuum mm Hg	Min vacuum Torr	Max vacuum mm Hg	Max vacuum Torr	Weight lb (Kg)	Coil	
UAG 3222			1/2″	electric amplified	vacuum	.591 (15)	30	15	20	150	610	759,5	0,5	2.62 (1.19)	U2	
UAG 3232		3/2 NC	3/4″	electric amplified	vacuum	.748 (19)	30	15	35	150	610	759,5	0,5	2.49 (1.13)	U2	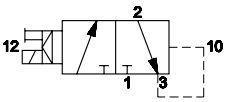
UAG 3242			1″	electric amplified	vacuum	.984 (25)	38	18	90	150	610	759,5	0,5	3.57 (1.62)	U2	
UAG 3256	N = NPT = BSPP		1 1/2″	electric amplified	vacuum	1.535 (39)	75	50	100	150	610	759,5	0,5	4.41 (2)	U2	
UAG 3223			1/2″	electric amplified	vacuum	.591 (15)	20	18	20	150	610	759,5	0,5	2.62 (1.19)	U2	
UAG 3233		3/2 NO	3/4″	electric amplified	vacuum	.748 (19)	20	18	35	150	610	759,5	0,5	2.49 (1.13)	U2	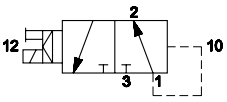
UAG 3243			1	electric amplified	vacuum	.984 (25)	25	20	90	150	610	759,5	0,5	3.57 (1.62)	U2	
UAG 3257			1 1/2″	electric amplified	vacuum	1.535 (39)	70	60	100	150	610	759,5	0,5	4.41 (2)	U2	

1/2″ - 3/4″ - 1″

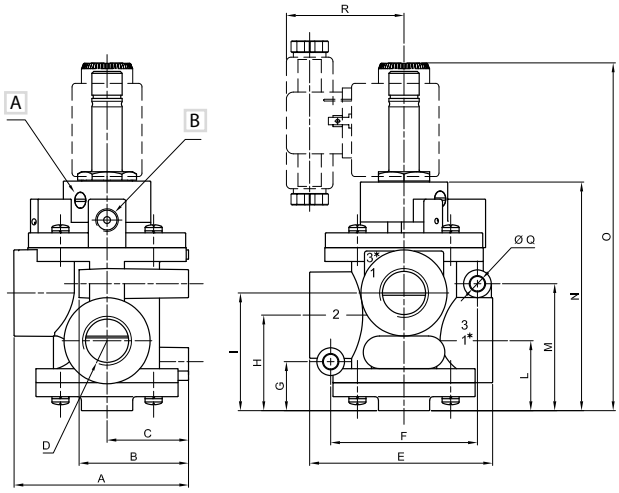

	A	B	C	D	E	F	G	H	I	L	M	N	O	Q	R
1/2″	75	47	35	1/2″	78,5	63	21	41	50,5	30	54,5	100	150	6,4	50,5
3/4″	75	47	35	3/4″	78,5	63	21	41	50,5	30	54,5	100	150	6,4	50,5
1″	88,5	55	40	1″	101	76	25,5	51	64	38	62,5	115	167	8,4	50

1 = Supply port (vacuum)
2 = Use
3 = Exhaust

A Manual override

B For 1/8″ plug

For the 2/2 version, install a plug in port (3).
Electrovalves are supplied without coil and connector

1 1/2″

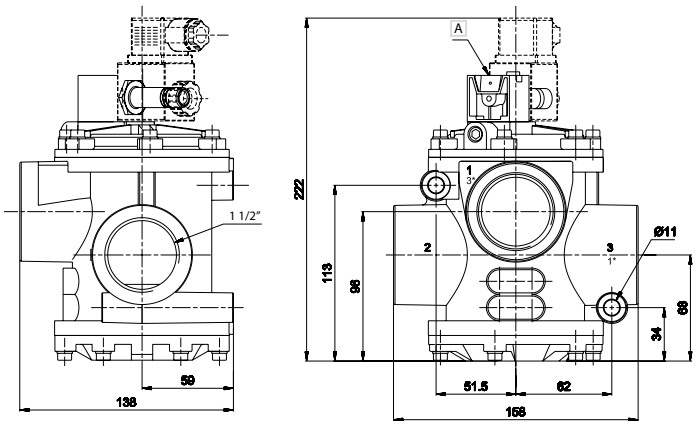

1 = Supply port (vacuum)
2 = Use
3 = Exhaust

A Manual override

2/2 - 3/2 DIRECT-ACTING SOLENOID VALVE FOR VACUUM



1/4″

UAG 3310
UAG 3311
UAG 3312
UAG 3313
UAG 3300
UAG 3301
UAG 3302
UAG 3303



1/2″

UAG 3330
UAG 3331
UAG 3332
UAG 3320
UAG 3321
UAG 3322

Code	Thread	Way	Spool	Control	Return	Ø	Exhaust	Resp. Time (ms)		Pump	Max vacuum		Weight	Coil
				12	10	inch (mm)	inch (mm)	Ecc.	Dis.	max m³/h	mm Hg	Torr	lb (Kg)	
UAG 3310	only BSPP	3/2 NC	1/4″	electric	mechanical spring	.118 (3)	.118 (3)	10	10	1,8	759,5	0,5	0.49 (0.22)	**U2**
UAG 3311			1/4″	electric	mechanical spring	.157 (4)	.118 (3)	12	8	2,5	759,5	0,5	0.49 (0.22)	**U2**
UAG 3312			1/4″	electric	mechanical spring	.197 (5)	.118 (3)	13	8	4	759,5	0,5	0.49 (0.22)	**U2**
UAG 3313			1/4″	electric	mechanical spring	.236 (6)	.118 (3)	15	8	5	759,5	0,5	0.49 (0.22)	**U2**
UAG 3330			1/2″	electric	mechanical spring	.315 (8)	.118 (3)	17	8	6	759,5	0,5	0.55 (0.25)	**U2**
UAG 3331			1/2″	electric	mechanical spring	.394 (10)	.118 (3)	20	10	7,5	759,5	0,5	0.55 (0.25)	**U2**
UAG 3332			1/2″	electric	mechanical spring	.433 (11)	.118 (3)	18	10	10	759,5	0,5	0.55 (0.25)	**U2**
UAG 3300		2/2 NC	1/4″	electric	mechanical spring	.118 (3)	-	10	-	1,8	759,5	0,5	0.49 (0.22)	**U2**
UAG 3301			1/4″	electric	mechanical spring	.157 (4)	-	12	-	2,5	759,5	0,5	0.49 (0.22)	**U2**
UAG 3302			1/4″	electric	mechanical spring	.197 (5)	-	13	-	4	759,5	0,5	0.49 (0.22)	**U2**
UAG 3303			1/4″	electric	mechanical spring	.236 (6)	-	15	-	5	759,5	0,5	0.49 (0.22)	**U2**
UAG 3320			1/2″	electric	mechanical spring	.315 (8)	-	17	-	6	759,5	0,5	0.55 (0.25)	**U2**
UAG 3321			1/2″	electric	mechanical spring	.394 (10)	-	20	-	7,5	759,5	0,5	0.55 (0.25)	**U2**
UAG 3322			1/2″	electric	mechanical spring	.433 (11)	-	28	-	10	759,5	0,5	0.55 (0.25)	**U2**

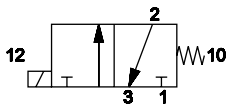

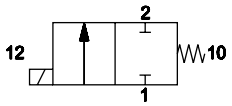

1/4″

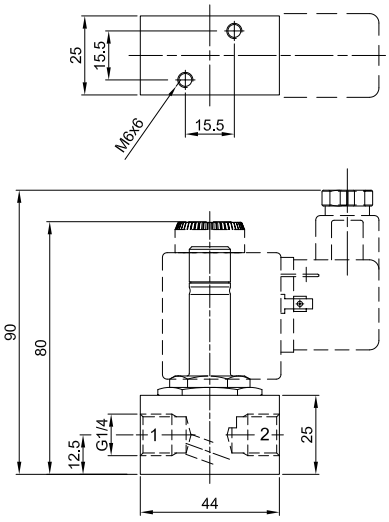

1/2″

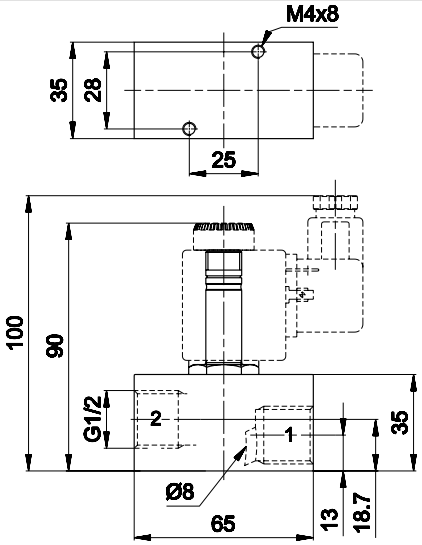

1 = Supply port (vacuum)
2 = Use
3 = Exhaust - fixed - Ø .118 (Ø 3 mm)

1 = Supply port (vacuum)
2 = Use
3 = Exhaust - Ø .118 (Ø 3 mm)

Electrovalves are supplied without coil and connector

COILS U2 - 17 VA



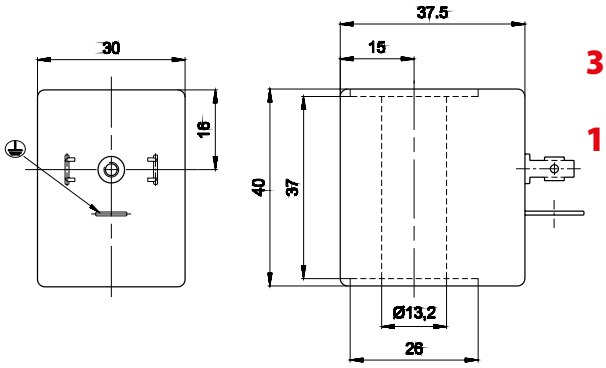

30 mm

13 mm Ø

Code	Duty cycle ED(a) %	Power consumption W		Tension tolerance %	Rated voltage	Weight lb (Kg)
		Hold	Inrush			
UDB 0607	100	-	17 VA (Max)	±10	24V AC - 50/60 Hz	0.13 (0.06)
UDB 0608	100	-	17 VA (Max)	±10	110V AC - 50/60 Hz	0.13 (0.06)
UDB 0610	100	-	17 VA (Max)	±10	220V AC - 50/60 Hz	0.13 (0.06)



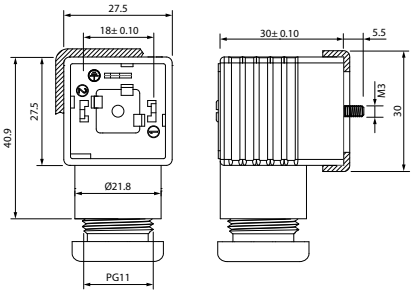

			Size	Color	Characteristics
*	CONU3 100 01	c UL us	30 - 36 mm	BLACK	2 PINS
*	CONU3 202 40	c UL us	30 - 36 mm	TRANSPARENT	LED + VDR 0 - 24V
*	CONU3 211 00	c UL us	30 - 36 mm	TRANSPARENT	LED + VDR 110V
*	CONU3 225 00	c UL us	30 - 36 mm	TRANSPARENT	LED + VDR 220V

*: UL 1977 AND CAN/CSA C22.2 NO. 182.3

VDR: Fitted with varistors as surge protection device.

Electrovalves are supplied without coil and connector