AIGNEP

Poppet Valves Series

G1/8 ÷ G1 1/2 Poppet Valves for Compressed Air



AF

Pg. 19.3

G1/8 ÷ G1 1/2 Poppet Valves for Vacuum



AG

Pg. 19.13

Mixed Threaded Valves G1/8 - G 1/4 - G1/2



AC

Pg. 19.25

Namur Valves



AC-N

Pg. 19.35

Solenoids and Connectors



Coils & Connectors

Pg. 19.41

Click here to view the Poppet Valves Series on our Website

AIGNEP

AIGNEP

POPPET VALVES



Poppet Valves Series

AF - POPPET VALVES 1/8" ÷ 1 1/2"

The AF series valves are based on a proven poppet valve design, recognized for their high reliability and consistent performance over time.
Designed for demanding industrial applications, they provide high flow rates, fast switching, and long service life even in harsh operating environments, helping to reduce downtime and maintenance requirements.

WIDE RANGE

1/8" ÷ 1 1/2" 2/2 - 3/2 NC-NO

COMPRESSED AIR VERSION

HIGH FLOW RATE

Up to 35000 Nl/min (1 1/2")



		AF Nl/min Compressed air
	1/8" (Ø 5,5)	580
	1/4" (Ø 8)	1100
	3/8" (Ø 10)	1500
	1/2" (Ø 15)	5400
	3/4" (Ø 19)	6500
	1" (Ø 25)	13500
	1 1/2" (Ø 39)	35000



Original poppet valve system since 1973

SERIES AF - POPPET VALVES FOR COMPRESSED AIR

Poppet valves for compressed air Wide range: 1/8" - 1/4" - 3/8" - 1/2" - 3/4" - 1" - 1 1/2"

- Original Univer poppet system recognized by the market over the years
- Suitable for applications requiring high flow rates and a high number of cycles
- 1" - 2/2 version for bag filter cleaning

Fluid	Filtered air 50 µm, with or without lubrication
Pressure	Max 145 psi (10 bar)
Temperature Ambient	Max 122 °F (50 °C)
Temperature fluid	23 ÷ 140 °F (-5 ÷ 60 °C)
Commutation system	Poppet
Ways/Positions	2/2 NC (on request), 3/2 NC, 3/2 NO, 3/2 NC-NO
Control	Pneumatic, indirectly operated electro-pneumatic
Return	Pneumo-mechanical spring
Manual override	Impulse screw-operated, 2 positions
Valve Body	Zamak (1/8" to 1"), aluminum (1 1/2") BSPP version upon request
Seals	Conical poppets in polyurethane and Vulkollan diaphragm
Operators	Zamak (1/8" to 1"), aluminum (1 1/2")
Spool	Aluminum (1/8" to 3/8"), steel + plastic (1/2" to 1 1/2")
Voltage	12 V DC - 24 V DC - 24 V AC - 110 V AC - 230 V AC

Reference standard

II 2G Ex h IIC T5 Gb

II 2D Ex h IIIC T100°C Db

II 3 GD c nA II T5 -10 °C ≤ Ta ≤ 45 °C IP65



CHARACTERISTICS							
Connections	1/8"	1/4"	3/8"	1/2"	3/4"	1"	1 1/2"
Nominal bore inch (mm)	.217 (5.5)	.315 (8)	.394 (10)	.591 (15)	.748 (19)	.984 (25)	1.535 (39)
Nominal flow rate (Nl/min)	580	1100	1500	5400	6500	13500	35000
Electropilot	AA			AB			
Coil	U1 - UDA			U2 - UDB			
Power consumption	3,5 W (DC) - 5 VA (AC)			11 W (DC) - 10 VA (AC)			
Connector	CONU 1			CONU 3			

SOLENOID VALVES



1/8″

UAF 2500

UAF 2501



1/4″

UAF 2510

UAF 2511

3/8″

UAF 2520

UAF 2521

Code		Way	Spool	Control 12	Return 10	Flow rate (Nl/min)	Ø inch (mm)	Resp. time (ms) En.	Resp. time (ms) De-en.	Pressure psi (bar) min.	Pressure psi (bar) max.	Weight lb (Kg)	Coil	
UAF 2500			1/8″	electric amplified	pneumatic + spring	580	.217 (5.5)	15	20	22 (1.5)	145 (10)	0.55 (0.25)	**U1**	
UAF 2510	**N** = NPT = BSPP	3/2 NC	1/4″	electric amplified	pneumatic + spring	1100	.315 (8)	20	23	23 (1.6)	145 (10)	1.28 (0.58)	**U1**	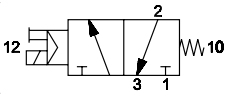
UAF 2520			3/8″	electric amplified	pneumatic + spring	1500	.394 (10)	20	23	23 (1.6)	145 (10)	1.23 (0.56)	**U1**	
UAF 2501			1/8″	electric amplified	pneumatic + spring	580	.217 (5.5)	15	20	22 (1.5)	145 (10)	0.55 (0.25)	**U1**	
UAF 2511	**N** = NPT = BSPP	3/2 NO	1/4″	electric amplified	pneumatic + spring	1100	.315 (8)	15	20	23 (1.6)	145 (10)	1.28 (0.58)	**U1**	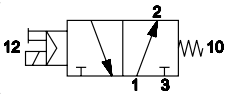
UAF 2521			3/8″	electric amplified	pneumatic + spring	1500	.394 (10)	15	20	23 (1.6)	145 (10)	1.23 (0.56)	**U1**	

1/8″

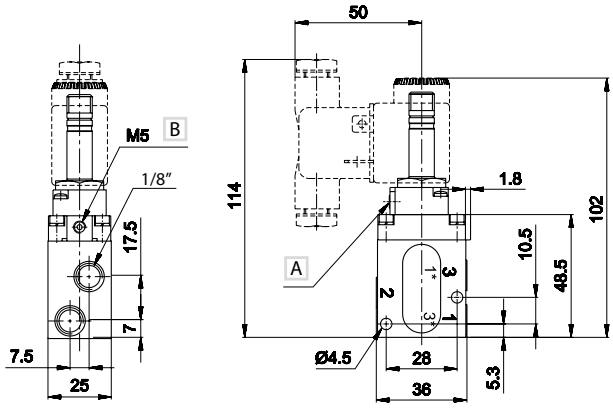

1 = Supply port
2 = Use
3 = Exhaust

A Manual override

B External servoassistance of the pilot

Upon request:
- external servoassistance of the pilot
- 1/4 - 3/8 U2 without manual override
- for 2/2 version put a plug into the exhaust

Electrovalves are supplied without coil, connector

1/4″ - 3/8″

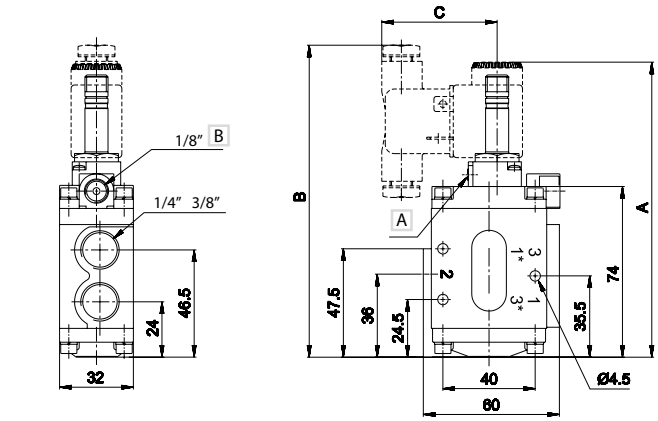

	A	B	C
U1	129	136	50
U2	140,5	150	51,5

1 = Supply port
2 = Use
3 = Exhaust

A Manual override

B External servoassistance of the pilot

SOLENOID VALVES



1/2″
UAF 2530
UAF 2531

3/4″
UAF 2540
UAF 2541

1″
UAF 2545
UAF 2546



1 1/2″
UAF 2565
UAF 2561

Code		Way	Spool	Control 12	Return 10	Flow rate (Nl/min)	Ø inch (mm)	Resp. time (ms) En.	Resp. time (ms) De-en.	Pressure psi (bar) min.	Pressure psi (bar) max.	Weight lb (Kg)	Coil
UAF 2530			1/2″	electric amplified	pneumatic + spring	5400	.591 (15)	17	27	29 (2)	145 (10)	2.62 (1.19)	**U2**
UAF 2540	**N** = NPT = BSPP	3/2 NC	3/4″	electric amplified	pneumatic + spring	6500	.748 (19)	17	27	29 (2)	145 (10)	2.49 (1.13)	**U2**
UAF 2545			1″	electric amplified	pneumatic + spring	13500	.984 (25)	20	32	32 (2.2)	145 (10)	3.57 (1.62)	**U2**
UAF 2565			1 1/2″	electric amplified	pneumatic + spring	35000	1.535 (39)	47	22	36 (2.5)	145 (10)	5.00 (2.27)	**U2**
UAF 2531			1/2″	electric amplified	pneumatic + spring	5400	.591 (15)	22	22	44 (3)	145 (10)	2.62 (1.19)	**U2**
UAF 2541	**N** = NPT = BSPP	3/2 NO	3/4″	electric amplified	pneumatic + spring	6500	.748 (19)	22	22	44 (3)	145 (10)	2.49 (1.13)	**U2**
UAF 2546			1″	electric amplified	pneumatic + spring	13500	.984 (25)	23	23	44 (3)	145 (10)	3.57 (1.62)	**U2**
UAF 2561			1 1/2″	electric amplified	pneumatic + spring	35000	1.535 (39)	20	20	44 (3)	145 (10)	5.00 (2.27)	**U2**

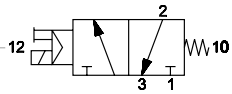

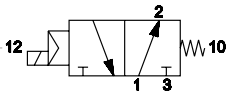

1/2″ - 3/4″ - 1″

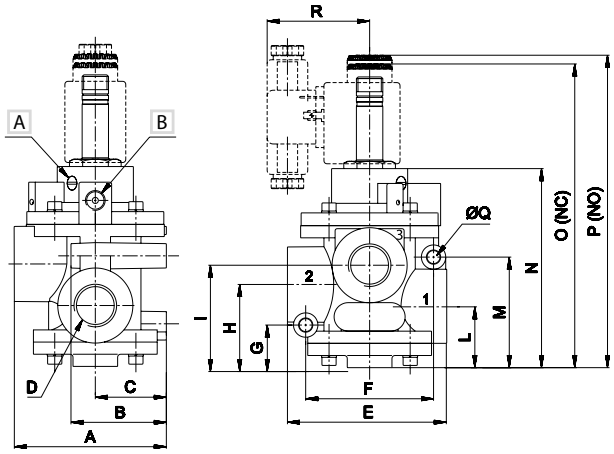

	A	B	C	D	E	F	G	H	I	L	M	N	O	P	Q	R
1/2″	75	47	35	1/2″	78,5	63	21	41	50,5	30	54,5	100	150	154	6,4	50,5
3/4″	75	47	35	3/4″	78,5	63	21	41	50,5	30	54,5	100	150	154	6,4	50,5
1″	89	55	40	1″	101	76	25,5	51	64	38	62,5	115	167	175	8,4	50

1 = Supply port
2 = Use
3 = Exhaust

A Manual override

B External servoassistance of the pilot

Upon request:
- external servoassistance of the pilot
Electrovalves are supplied without coil and connector

1 1/2″

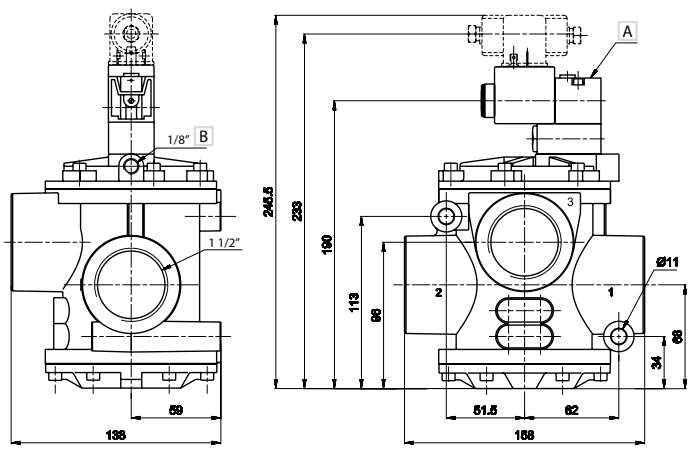

1 = Supply port
2 = Use
3 = Exhaust

A Manual override

B External servoassistance of the pilot

U1 22 MM COIL



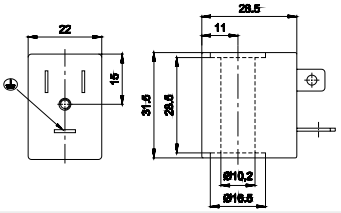

22 mm

10 mm Ø

Code	Duty cycle ED (a) %	Power consumption W Hold	Inrush	Tolerance tension %	Rated voltage	Weight lb (Kg)
UDA 0050	100	3,5	3,5	±10	12 V DC	0.13 (0.06)
UDA 0051	100	3,5	3,5	±10	24 V DC	0.13 (0.06)
UDA 0106	100	5,4 VA (Max)	7,8 VA (Max)	±10	24 V AC/50-60 HZ	0.13 (0.06)
UDA 0108	100	5,4 VA (Max)	7,8 VA (Max)	±10	110 V AC/50-60 HZ	0.13 (0.06)
UDA 0124	100	5,4 VA (Max)	7,8 VA (Max)	±10	230 V AC/50-60 HZ	0.13 (0.06)



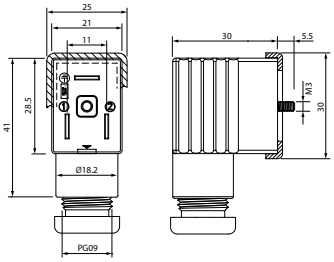

	Code		Size	Color	Characteristics
*	CONU1 000 01		.866 (22 mm)	BLACK	2 PINS
*	CONU2 024 00		.866 (22 mm)	TRANSPARENT	LED + VDR 0 - 24V
*	CONU2 110 00		.866 (22 mm)	TRANSPARENT	LED + VDR 110V
*	CONU2 250 00		.866 (22 mm)	TRANSPARENT	LED + VDR 220V

*: UL 1977 AND CAN/CSA C22.2 NO. 182.3

VDR: Fitted with varistors as surge protection device.

U2 30 MM COIL



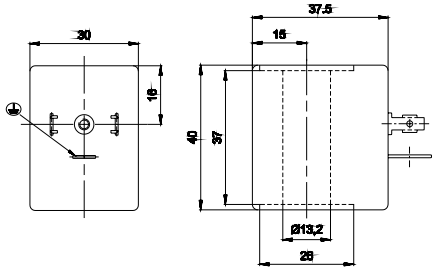

30 mm

13 mm Ø

Code	Duty cycle ED(a) %	Power consumption W Hold	Hold	Tension tolerance %	Rated voltage	Weight lb (Kg)
UDB 0501	100	11	11	±10	12 V DC	0.13 (0.06)
UDB 0502	100	11	11	±10	24 V DC	0.13 (0.06)
UDB 0507	100	10 VA (Max)	16 VA (Max)	±10	24 V AC/50-60 HZ	0.13 (0.06)
UDB 0509	100	10 VA (Max)	16 VA (Max)	±10	110 V AC/50-60 HZ	0.13 (0.06)
UDB 0510	100	10 VA (Max)	16 VA (Max)	±10	230 V AC/50-60 HZ	0.13 (0.06)



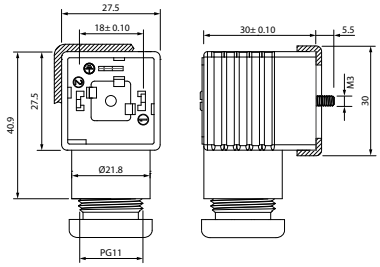

	Code		Size	Color	Characteristics
*	CONU3 100 01		30 - 36 mm	BLACK	2 PINS
*	CONU3 202 40		30 - 36 mm	TRANSPARENT	LED + VDR 0 - 24V
*	CONU3 211 00		30 - 36 mm	TRANSPARENT	LED + VDR 110V
*	CONU3 225 00		30 - 36 mm	TRANSPARENT	LED + VDR 220V

*: UL 1977 AND CAN/CSA C22.2 NO. 182.3

VDR: Fitted with varistors as surge protection device.

(a) = 110V - 230V solenoid valves must be built-in (EN-60204-1)

Under continuous service a maximum temperature will not compromise the functioning of the coil provided that the working position is ventilated

SERVO VALVE



1/8″

UAF 2600

UAF 2700



1/4″

UAF 2601

UAF 2701

3/8″

UAF 2606

UAF 2706

Code		Way	Spool	Control 12	Return 10	Flow rate (Nl/min)	Ø inch (mm)	Resp. time (ms) En.	Resp. time (ms) De-en.	Pressure psi (bar) supply	Pressure psi (bar) control	Weight lb (Kg)	
UAF 2600			1/8″	pneumatic amplified	pneumatic + spring	580	.217 (5.5)	5	8	87 (6)	51 (3.5)	0.46 (0.21)	
UAF 2601	**N** = NPT = BSPP	3/2 NC	1/4″	pneumatic amplified	pneumatic + spring	1100	.315 (8)	5	7	87 (6)	58 (4)	1.19 (0.54)	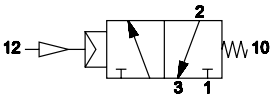
UAF 2606			3/8″	pneumatic amplified	pneumatic + spring	1500	.394 (10)	5	7	87 (6)	58 (4)	1.15 (0.52)	
UAF 2700			1/8″	pneumatic amplified	pneumatic + spring	580	.217 (5.5)	5	8	87 (6)	51 (3.5)	0.46 (0.21)	
UAF 2701	**N** = NPT = BSPP	3/2 NO	1/4″	pneumatic amplified	pneumatic + spring	1100	.315 (8)	5	7	87 (6)	58 (4)	1.19 (0.54)	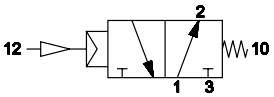
UAF 2706			3/8″	pneumatic amplified	pneumatic + spring	1500	.394 (10)	5	7	87 (6)	58 (4)	1.15 (0.52)	

1/8″

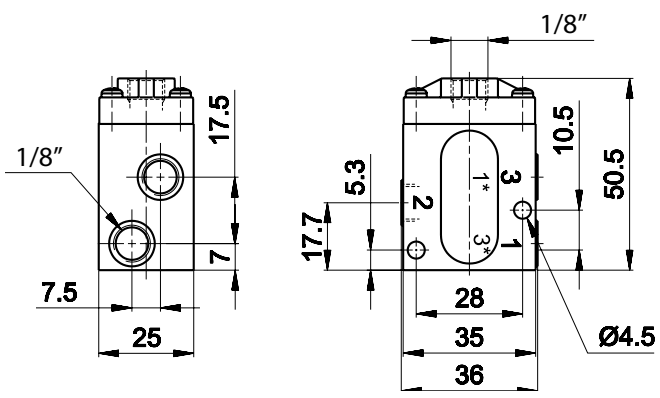

1 = Supply port
2 = Use
3 = Exhaust

1/4″ - 3/8″

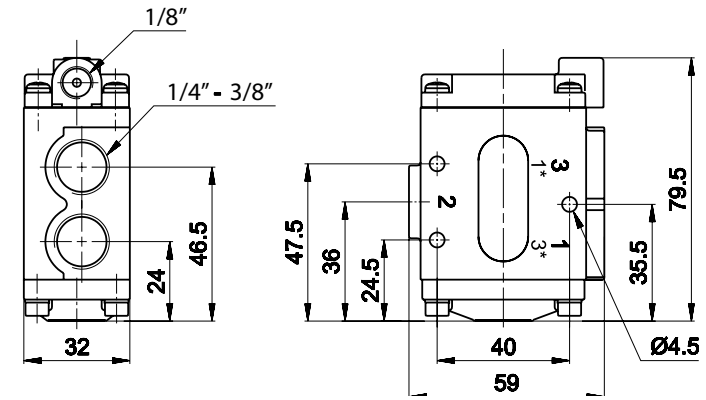

1 = Supply port
2 = Use
3 = Exhaust

Upon request:
- 2/2-way and pneumatic servo-controlled versions available
- For the 2/2-way version, fit a plug to the outlet

SERVO VALVE



1/2″ **UAF 2603**

3/4″ **UAF 2610**

1″ **UAF 2615**



1 1/2″ **UAF 2620**

Code	Way	Spool	Control 12	Return 10	Flow rate (Nl/min)	Ø inch (mm)	Resp. time (ms) En.	Resp. time (ms) De-en.	Pressure psi (bar) supply	Pressure psi (bar) control	Weight Kg	
UAF 2603	N = NPT = BSPP	1/2″	pneumatic amplified	pneumatic + spring	5400	.591 (15)	7	10	87 (6)	58 (4)	2.80 (1.27)	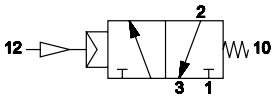
UAF 2610	3/2 NC 3/2 NO	3/4″	pneumatic amplified	pneumatic + spring	6500	.748 (19)	7	10	87 (6)	58 (4)	2.43 (1.10)	
UAF 2615		1″	pneumatic amplified	pneumatic + spring	13500	.984 (25)	10	12	87 (6)	58 (4)	3.51 (1.59)	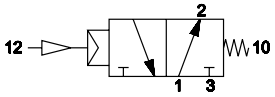
UAF 2620		1 1/2″	pneumatic amplified	pneumatic + spring	35000	1.535 (39)	36	15	87 (6)	58 (4)	4.83 (2.19)	

1/2″ - 3/4″ - 1″

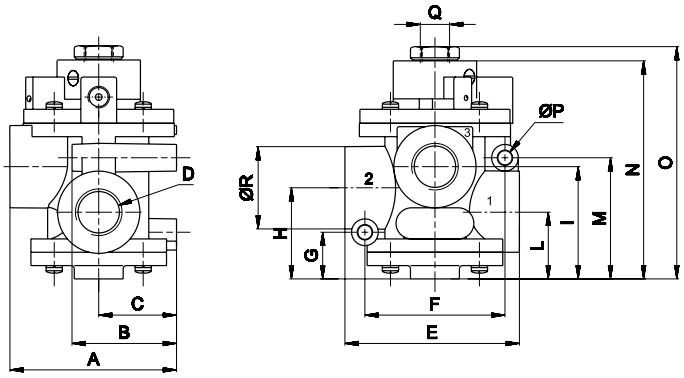

	A	B	C	D	E	F	G	H	I	L	M	N	O	P	Q	R
1/2″	75	47	35	1/2″	78,5	63	21	41	50,5	30	54,5	100	105	6,4	1/4″	37
3/4″	75	47	35	3/4″	78,5	63	21	41	50,5	30	54,5	100	105	6,4	1/4″	37
1″	88,5	55	40	1″	101	76	25,5	51	64	38	62,5	115	120,5	8,4	1/4″	45

1 = Supply port
2 = Use
3 = Exhaust

1 1/2″

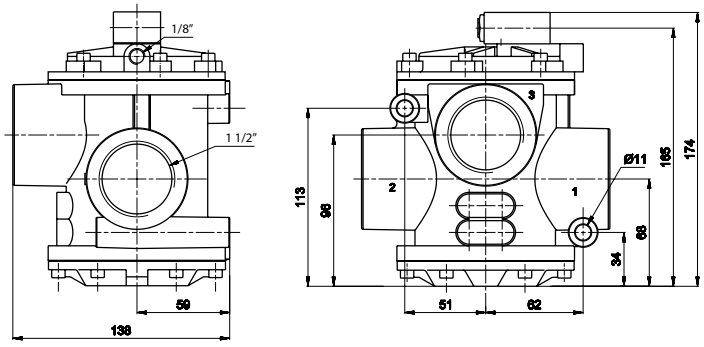

1 = Supply port
2 = Use
3 = Exhaust

Upon request:
- external pilot power supply
Electrovalves are supplied without coil and connector

2/2 SOLENOID VALVE FOR BLOWING



1″

UAF 2550

UAF 2551

UAF 2552

Code		Way	Spool	Control 12	Return 10	Flow rate (Nl/min)	Ø inch (mm)	Resp. time (ms) En.	Resp. time (ms) De-en.	Pressure bar min.	Pressure bar max.	Pressure bar supply	Pressure bar control	Weight lb (Kg)	Coil	
UAF 2550			1″	electric amplified	pneumatic + spring	1600	.984 (25)	23	55	29 (2)	145 (10)	-	-	2.34 (1.06)	**U2**	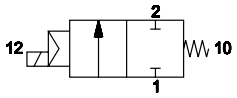
UAF 2551	**N** = NPT = BSPP	2 /2 NC	1″	electric amplified	pneumatic + spring	1600	.984 (25)	23	55	29 (2)	145 (10)	-	-	2.34 (1.06)	**U2**	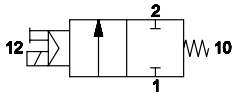
UAF 2552			1″	electric amplified	pneumatic + spring	1600	.984 (25)	23	35	-	-	87 (6)	58 (4)	2.34 (1.06)	**U2**	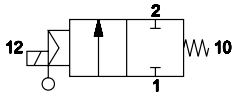

1″

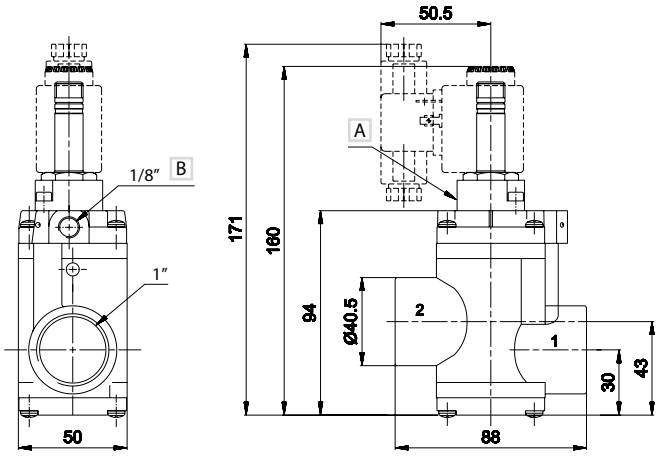

1 = Supply port
2 = Use

A Manual override **UAF 2551**

B External servoassistance of the pilot **UAF 2552**

Electrovalves are supplied without coil and connector

U2 30 MM COIL



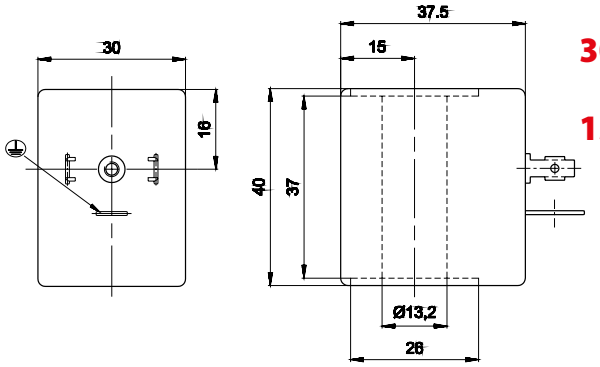

30 mm

13 mm Ø

Code	Duty cycle ED(a) %	Power consumption W Hold	Hold	Tension tolerance %	Rated voltage	Weight lb (Kg)
UDB 0501	100	11	11	±10	12 V DC	0.13 (0.06)
UDB 0502	100	11	11	±10	24 V DC	0.13 (0.06)
UDB 0507	100	10 VA (Max)	16 VA (Max)	±10	24 V AC/50-60 HZ	0.13 (0.06)
UDB 0509	100	10 VA (Max)	16 VA (Max)	±10	110 V AC/50-60 HZ	0.13 (0.06)
UDB 0510	100	10 VA (Max)	16 VA (Max)	±10	230 V AC/50-60 HZ	0.13 (0.06)

(a) = 110V - 230V solenoid valves must be built-in (EN-60204-1)

Under continuous service a maximum temperature will not compromise the functioning of the coil provided that the working position is ventilated



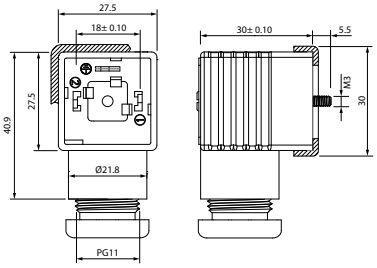

			Size	Color	Characteristics
*	**CONU3 100 01**	c UL us	30 - 36 mm	BLACK	2 PINS
*	**CONU3 202 40**	c UL us	30 - 36 mm	TRANSPARENT	LED + VDR 0 - 24V
*	**CONU3 211 00**	c UL us	30 - 36 mm	TRANSPARENT	LED + VDR 110V
*	**CONU3 225 00**	c UL us	30 - 36 mm	TRANSPARENT	LED + VDR 220V

*: **UL 1977 AND CAN/CSA C22.2 NO. 182.3**

VDR: Fitted with varistors as surge protection device.

2/2 PNEUMATIC VALVE FOR BLOWING WITH EXT. SUPPLY



1″

UAF 2617

Code		Way	Spool	Control 12	Return 10	Flow rate (Nl/min)	Ø inch (mm)	Resp. time (ms) En.	Resp. time (ms) De-en.	Pressure psi (bar) supply	Pressure psi (bar) control	Weight lb (Kg)	
UAF 2617	**N** = NPT = BSPP	2 /2 NC	1″	pneumatic amplified	pneumatic + spring	1600	.984 (25)	12	25	87 (6)	58 (4)	2.20 (1)	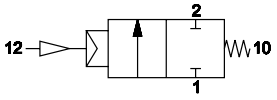

1″

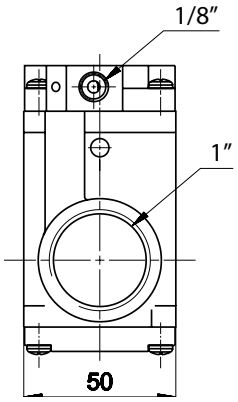

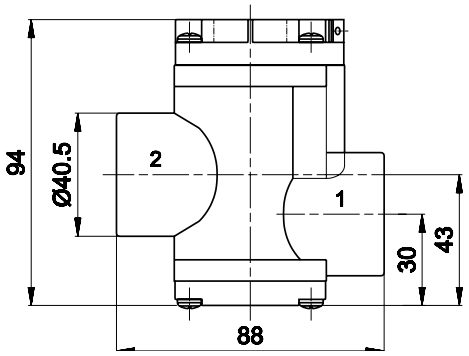

1 = Supply port
2 = Use