AIGNEP

Poppet Valves Series

G1/8 ÷ G1 1/2 Poppet Valves for Compressed Air



AF

Pg. 19.3

G1/8 ÷ G1 1/2 Poppet Valves for Vacuum



AG

Pg. 19.13

Mixed Threaded Valves G1/8 - G 1/4 - G1/2



AC

Pg. 19.25

Namur Valves



AC-N

Pg. 19.35

Solenoids and Connectors



Coils & Connectors

Pg. 19.41

Click here to view the Poppet Valves Series on our Website

AIGNEP

AIGNEP

POPPET VALVES



Poppet Valves Series

AC - VALVES MIXED

mixed system

For heavy applications
Fast commutation
Large number of cycles
High flow rate



MIXED
for heavy applications



AC 7 - G1/8
1080 Nl/min



AC 8 - G1/4
1600 Nl/min



AC 9 - G1/2
4600 Nl/min



Mechanic



Indirect drive



Pneumatic





Angle plate for "H" solenoid option



Angle plate for "P" solenoid option



Plate for external pilot supply

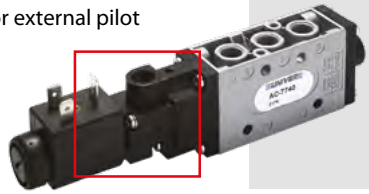

AC SERIES - VALVES MIXED

MIXED threaded valves G1/8 - G 1/4 - G1/2

- Mixed commutation system (spool - poppet)
- High flow rate
- Quick response time
- High cycles
- Control: manual, mechanical, pneumatic, electric
- Modular sub-bases

Fluid	50 µm filtered air, with or without lubrication		
Temperature ambient	14 ÷ 113 °F (-10 ÷ 45 °C)		
Temperature fluid	Max 122 °F (50 °C)		
Commutation system	poppet mixed system		
Ways/Positions	5/2		
Pressure	Max 145 psi (10 bar)		
Control	pneumatic, electric, mechanical		
Return	pneumatic + spring, pneumatic, electric		
Connections	G1/8	G1/4	G1/2
Nominal bore inch (mm)	.236 (6)	.315 (8)	.591 (15)
Nominal flow rate (Nl/min)	1080	1600	4600
Valve body	die-cast aluminum		
Seals	nitrile rubber, polyurethane		
Actuators	technopolymer		
Spool	aluminum		
Electropilot	G1/8 - G1/4 AA		G1/2 AB
Coil	U1 - DA		U2 - DB
Power consumption	3,5 W (DC) - 5 VA (AC)		11 W (DC) - 10 VA (AC)
Connector	CONU 1		CONU 3
Voltage	12 V DC - 24 V DC - 24 V AC - 110 V AC - 230 V AC		
Manual override	impulse screw - 2 positions		

Reference Standard

II 2G Ex h IIC T5 Gb

II 2D Ex h IIIC T100°C Db

II 3 GD c nA II T5 -10 °C ≤ Ta ≤ 45 °C IP65



FLOW RATE CHARACTERISTICS

G1/8

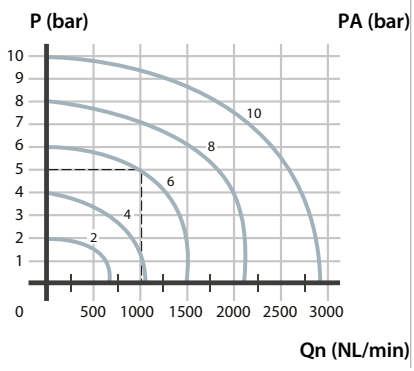

G1/4

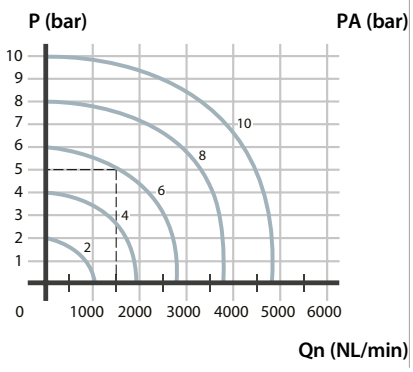

G1/2

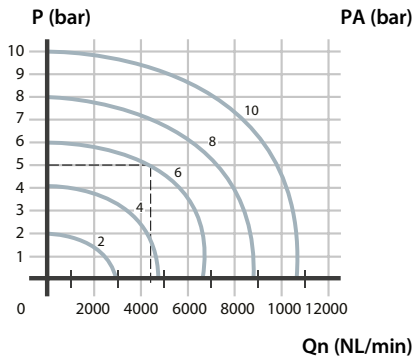

P (bar) = Working pressure

PA (bar) = Supply pressure

Qn (NL/min) = Flow rate

INDIRECT MECHANICAL CONTROL FOR USE WITH PNEUMATIC, MECHANICAL, AND MANUAL ACTUATORS

Code	Way	Thread	Control 14	Return 12	Pressure psi (bar)	Weight lb (Kg)
UAC 7010	5/2	G1/8	ball pushrod	pneumatic + spring	26 ÷ 145 (1.8 ÷ 10)	0.60 (0.27)
UAC 8010	5/2	G1/4	ball pushrod	pneumatic + spring	33 ÷ 145 (2.3 ÷ 10)	0.62 (0.28)
UAC 9010	5/2	G1/2	ball pushrod	pneumatic + spring	29 ÷ 145 (2 ÷ 10)	0.73 (0.33)



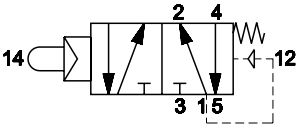

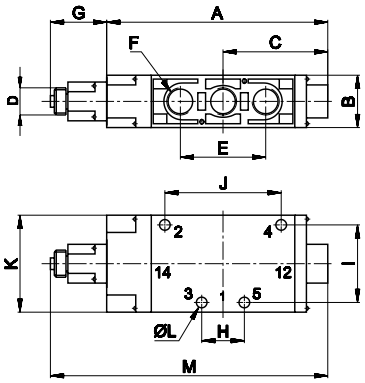

	A	B	C	D	E	F	G	H	I	J	K	L	M
G1/8	99	25	47	M14x1	36	G1/8	27	18	26	36	40	4,5	126
G1/4	114	27	54	M14x1	44	G1/4	27	22	40	60	50	5,5	141
G1/2	163	40	83	M14x1	80	G1/2	27	40	50	108	63	6,5	190

1 = Supply port
2 - 4 = Use
3 - 5 = Exhaust
14 = Control
12 = Return

PNEUMATIC AND MECHANICAL ACTUATORS

	UAI 3550	Pneumatic operator	
	UAI 3551	Amplified pneumatic operator	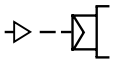
	UAI 3560	Roller operator 1 position	
	UAI 3562	Ball-push operator 1 position	
	UAI 3563	Operator with omni-directional antenna 1 position	
	UAI 3570	Roller lever operator 1 position	
	UAI 3571	Articulated roller operator 1 position Complete actuation with stroke .098 (2.5 mm) max stroke .185 (4.7 mm)	
	UAI 3572	Key operator 1 position	

MANUAL PUSH

	UAI 3511	■ BLACK	Recessed button	
	UAI 3512	■ RED		
	UAI 3513	■ GREEN		
	UAI 3514	■ RED	Head button	
	UAI 3516	■ BLACK		
	UAI 3514D	■ RED		
	UAI 3516D	■ BLACK		
	UAI 3515	■ GREEN	Button	
	UAI 3517	■ RED		
	UAI 3519	■ BLACK		
	UAI 3520	■ BLACK	Accident prevention rotating selector	
	UAI 3521	■ BLACK		
	UAI 3522	■ BLACK	Rotating lever selector	
	UAI 3523	■ BLACK		
	UAI 3524	■ BLACK	Lever operator	
	UAI 3525	■ BLACK	Omni-directional operator	
	UAI 3526	■ BLACK	Push-pull operator	

INDIRECT CONTROL FOR PANEL MOUNTING ACTUATORS Ø 22



Code	Way	Thread	Control 14	Return 12	Pressure psi (bar)	Weight lb (Kg)
UAC 7013	5/2	G1/8	ball pushrod	pneumatic + spring	26 ÷ 145 (1.8 ÷ 10)	0.62 (0.28)
UAC 8013	5/2	G1/4	ball pushrod	pneumatic + spring	33 ÷ 145 (2.3 ÷ 10)	0.64 (0.29)
UAC 9013	5/2	G1/2	ball pushrod	pneumatic + spring	29 ÷ 145 (2 ÷ 10)	1.85 (0.84)
UAC 7013P	5/2	G1/8	ball pushrod	pneumatic amplified	15 ÷ 145 (1 ÷ 10)	0.64 (0.29)
UAC 8013P	5/2	G1/4	ball pushrod	pneumatic amplified	15 ÷ 145 (1 ÷ 10)	0.62 (0.28)
UAC 9013P	5/2	G1/2	ball pushrod	pneumatic amplified	15 ÷ 145 (1 ÷ 10)	1.83 (0.83)

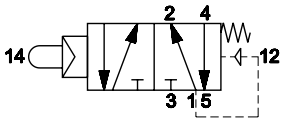

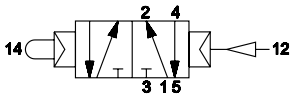

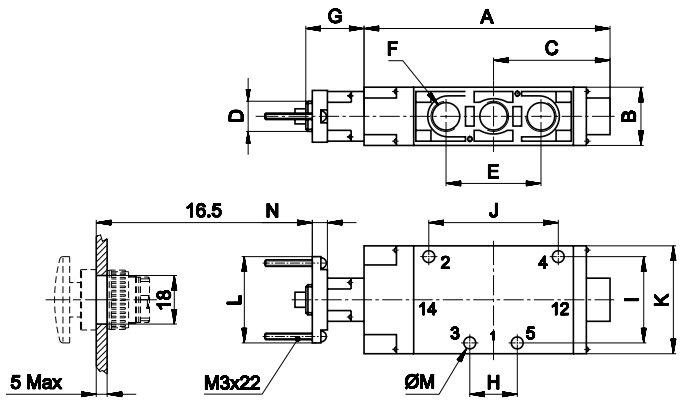

	A	B	C	D	E	F	G	H	I	J	K	L	M	N
G1/8	99	25	47	M14x1	36	G1/8	27	18	26	36	40	40	4,5	7
G1/4	114	27	54	M14x1	44	G1/4	27	22	40	60	50	40	5,5	7
G1/2	163	40	83	M14x1	80	G1/2	27	40	50	108	63	40	6,5	7

1 = Supply port
2 - 4 = Use
3 - 5 = Exhaust
14 = Control
12 = Return

MANUAL PUSH

	UAI 3511Q	■ BLACK	Recessed button	
	UAI 3512Q	■ RED		
	UAI 3513Q	■ GREEN		
	UAI 3514Q	■ RED	Head button	
	UAI 3516Q	■ BLACK		
	UAI 3514QD	■ RED		
	UAI 3516QD	■ BLACK		
	UAI 3515Q	■ GREEN	Button	
	UAI 3517Q	■ RED		
	UAI 3519Q	■ BLACK		
	UAI 3520Q	■ BLACK	Accident prevention rotating selector	
	UAI 3521Q	■ BLACK		
	UAI 3522Q	■ BLACK	Rotating lever selector	
	UAI 3523Q	■ BLACK		
	UAI 3524Q	■ BLACK	Lever operator	
	UAI 3525Q	■ BLACK	Omni-directional operator	
	UAI 3526Q	■ BLACK	Push-pull operator	

PNEUMATIC IMPULSE

Code	Way	Thread	Control 14	Return 12	Times (ms) En.	Times (ms) De-en.	Pressure psi (bar)	Weight lb (Kg)
SINGLE PNEUMATIC IMPULSE								
UAC 7100	5/2	G1/8	pneumatic amplified	pneumatic + spring	8	10	26 ÷ 145 (1.8 ÷ 10)	0.49 (0.22)
UAC 8100	5/2	G1/4	pneumatic amplified	pneumatic + spring	10	10	33 ÷ 145 (2.3 ÷ 10)	0.51 (0.23)
UAC 9100	5/2	G1/2	pneumatic amplified	pneumatic + spring	10	10	29 ÷ 145 (2 ÷ 10)	1.68 (0.76)
DOUBLE PNEUMATIC IMPULSE								
UAC 7120	5/2	G1/8	pneumatic amplified	pneumatic amplified	5	10	15 ÷ 145 (1 ÷ 10)	0.51 (0.23)
UAC 8120	5/2	G1/4	pneumatic amplified	pneumatic amplified	6	6	12 ÷ 145 (0.8 ÷ 10)	0.46 (0.21)
UAC 9120	5/2	G1/2	pneumatic amplified	pneumatic amplified	8	8	12 ÷ 145 (0.8 ÷ 10)	1.70 (0.77)



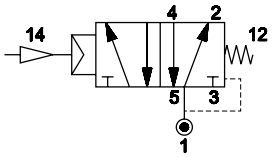



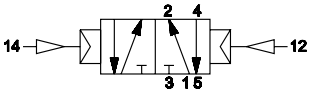

Single pneumatic impulse

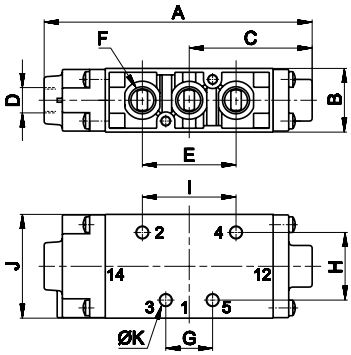

	A	B	C	D	E	F	G	H	I	J	K
G1/8	103	25	47	G1/8	36	G1/8	18	26	36	40	4,5
G1/4	117	27	54	G1/8	44	G1/4	22	40	60	50	5,5
G1/2	165	40	82,5	G1/8	80	G1/2	40	50	108	63	6,5

1 = Supply port
2 - 4 = Use
3 - 5 = Exhaust
14 = Control
12 = Return

Double pneumatic impulse

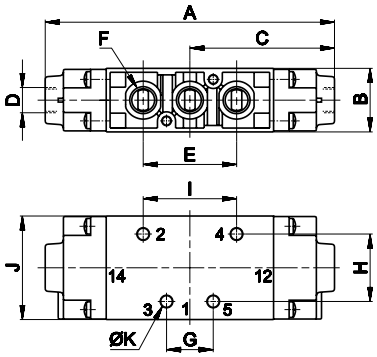

	A	B	C	D	E	F	G	H	I	J	K
G1/8	112	25	56	G1/8	36	G1/8	18	26	36	40	4,5
G1/4	126,5	25	63	G1/8	44	G1/4	22	40	60	50	5,5
G1/2	165	40	82,5	G1/8	80	G1/2	40	50	108	63	6,5

1 = Supply port
2 - 4 = Use
3 - 5 = Exhaust
14 = Control
12 = Return

ELECTRIC IMPULSE

Code	Way	Thread	Control 14	Return 12	Times (ms) Ecc.	Times (ms) Dis.	Pressure psi (bar)	Weight lb (Kg)
SINGLE ELECTRIC IMPULSE								
UAC 7500	5/2	G1/8	pneumatic amplified	pneumatic + spring	18	20	26 ÷ 145 (1.8 ÷ 10)	0.60 (0.27)
UAC 8500	5/2	G1/4	pneumatic amplified	pneumatic + spring	22	22	33 ÷ 145 (2.3 ÷ 10)	0.62 (0.28)
UAC 9500	5/2	G1/2	pneumatic amplified	pneumatic + spring	23	30	29 ÷ 145 (2 ÷ 10)	2.43 (1.1)
DOUBLE ELECTRIC IMPULSE								
UAC 7520	5/2	G1/8	electric amplified	electric amplified	14	14	15 ÷ 145 (1 ÷ 10)	0.73 (0.33)
UAC 8520	5/2	G1/4	electric amplified	electric amplified	14	14	12 ÷ 145 (0.8 ÷ 10)	0.68 (0.31)
UAC 9520	5/2	G1/2	electric amplified	electric amplified	16	16	12 ÷ 145 (0.8 ÷ 10)	2.43 (1.1)



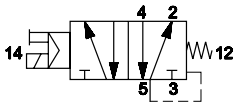



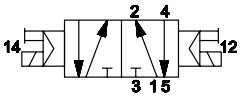

Single electric impulse

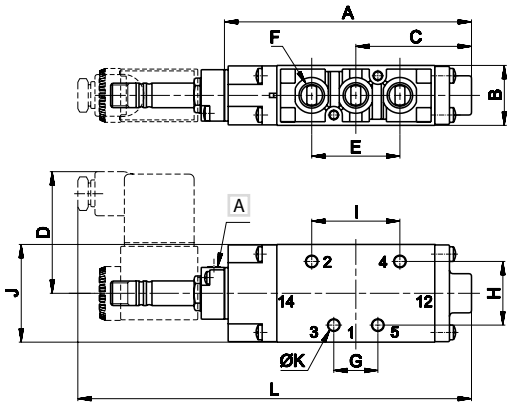

	A	B	C	D	E	F	G	H	I	J	K	L
G1/8	101	25	47	50	36	G1/8	18	26	36	40	4,5	164
G1/4	116	27	54	50	44	G1/4	22	40	60	50	5,5	180
G1/2	165	40	83	48	80	G1/2	40	50	108	63	6,5	241

A Manual override

1 = Supply port
2 - 4 = Use
3 - 5 = Exhaust
14 = Control
12 = Return

Double electric impulse

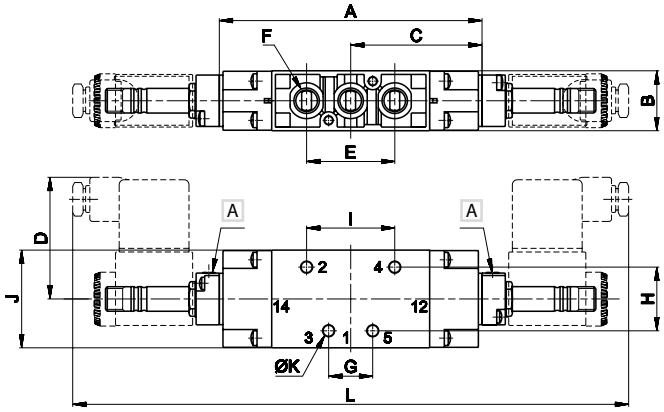

	A	B	C	D	E	F	G	H	I	J	K	L
G1/8	107	25	53,5	50	36	G1/8	18	26	36	40	4,5	227
G1/4	124	27	62	50	44	G1/4	22	40	60	50	5,5	252
G1/2	164	40	80,5	48	80	G1/2	40	50	108	63	6,5	317

A Manual override

1 = Supply port
2 - 4 = Use
3 - 5 = Exhaust
14 = Control
12 = Return

MODULAR SUB-BASE G1/8



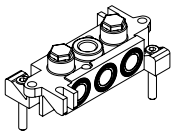

UAC 7900

Sub-base with connections G1/8
weight: 0.33 lb (0.15 kg)

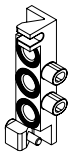

UAC 7905

Inlet plate MIXED system 5/2 - G1/8
weight: 0.13 lb (0.06 kg)

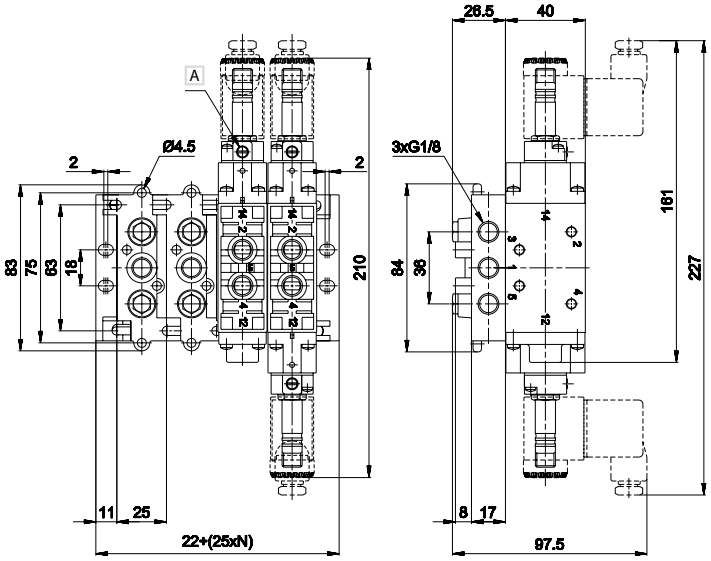

A Manual override

1 = Supply port
2 - 4 = Use
3 - 5 = Exhaust
14 = Control
12 = Return

MODULAR SUB-BASE G1/4



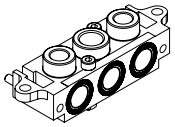

UAC 8900

Sub-base with threaded connections G1/4
Screws included
weight: 0.49 lb (0.22 kg)

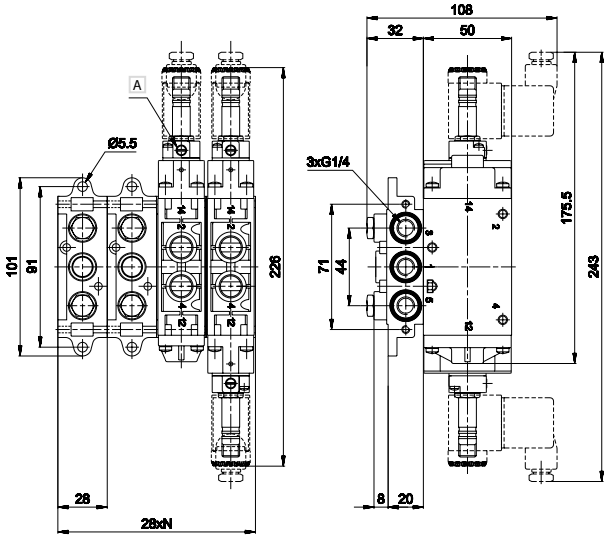

A Manual override

1 = Supply port
2 - 4 = Use
3 - 5 = Exhaust
14 = Control
12 = Return

PLATE FOR EXTERNAL PILOT

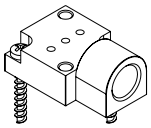

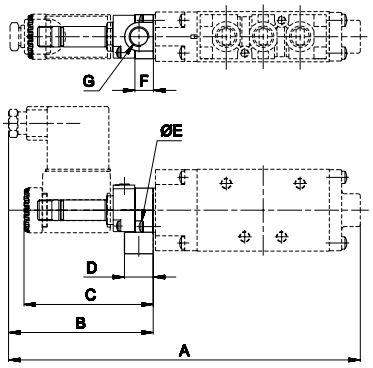

UAM 5148

Plate for external servoassisted pilot weight: 0.07 lb (0.03 kg)

	A	B	C	D	E	F	G
G1/8	171,5	70,5	63	14	2,9X10	9	G1/8
G1/4	186	70,5	63	14	2,9X10	9	G1/8

ANGLE PLATE FOR "H"

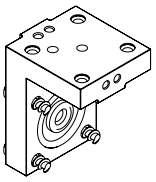

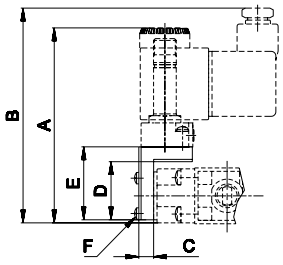

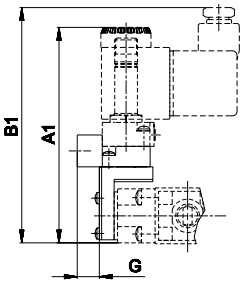

UAM 5151 + UAM 5148

"H" option solenoid square weight: 0.08 lb (0.035 kg)

	A	A1	B	B1	C	D	E	F	G
G1/8	87,7	96,7	95,5	104,5	6,5	25,5	32	2,9X10	9,7
G1/4	88,7	97,7	96,5	105,5	6,5	25,5	32	2,9X10	9,7

ANGLE PLATE FOR "P"

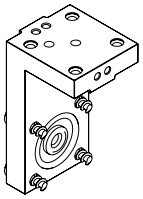

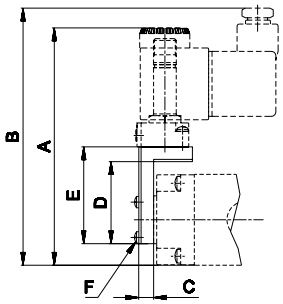

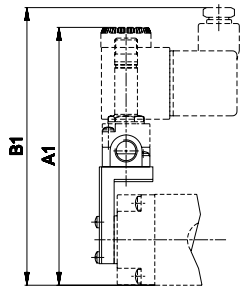

UAM 5152 + UAM-5148

"P" option solenoid square weight: 0.11 lb (0.05 kg)

	A	A1	B	B1	C	D	E	F
G1/8	106	115	113,5	122,5	6,5	36	42,5	2,9X10
G1/4	111	120	118,5	127,5	6,5	36	42,5	2,9X10

Plate for external pilot supply

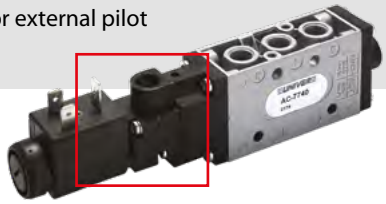

Angle plate for "H" solenoid option



Angle plate for "P" solenoid option



COILS

CSA/UL approval

Possibility of replacement without intervention in the pneumatic circuit
Other voltages available upon request
360° rotation on the pilot. Coil winding: H class
Ambient temperature: +14 ÷ +113 °F. Fluid temperature: +14 ÷ +203 °F.
The solenoid valves functioning with 100V-230V must be incorporated (EN60204-1)
Under continuous service a maximum temperature will not compromise the functioning of the coil provided that the working position is ventilated.
Protection class IP65, if used with connector.

U1 22 MM COIL



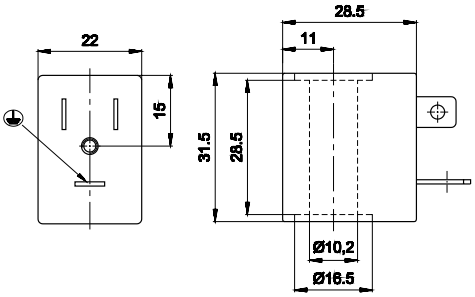

22 mm
10 mm

Code	Duty cycle ED (a) %	Power consumption W		Tolerance tension %	Rated voltage	Weight lb (Kg)
		Hold	Inrush			
UDA 0050	100	3,5	3,5	±10	12 V DC	0.13 (0.06)
UDA 0051	100	3,5	3,5	±10	24 V DC	0.13 (0.06)
UDA 0106	100	5,4 VA (Max)	7,8 VA (Max)	±10	24 V AC/50-60 HZ	0.13 (0.06)
UDA 0108	100	5,4 VA (Max)	7,8 VA (Max)	±10	110 V AC/50-60 HZ	0.13 (0.06)
UDA 0124	100	5,4 VA (Max)	7,8 VA (Max)	±10	230 V AC/50-60 HZ	0.13 (0.06)



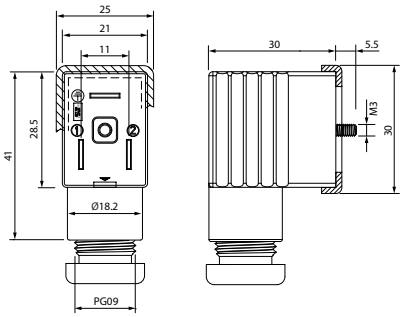

	Code		Size	Color	Characteristics
*	CONU1 000 01		.866 (22 mm)	BLACK	2 PINS
*	CONU2 024 00		.866 (22 mm)	TRANSPARENT	LED + VDR 0 - 24V
*	CONU2 110 00		.866 (22 mm)	TRANSPARENT	LED + VDR 110V
*	CONU2 250 00		.866 (22 mm)	TRANSPARENT	LED + VDR 220V

*: UL 1977 AND CAN/CSA C22.2 NO. 182.3

VDR: Fitted with varistors as surge protection device.

U2 30 MM COIL



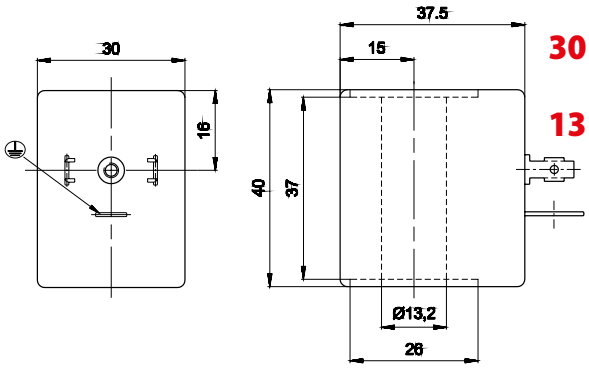

Code	Duty cycle ED(a) %	Power consumption W Hold	Hold	Tension tolerance %	Rated voltage	Weight lb (Kg)
UDB 0501	100	11	11	±10	12 V DC	0.13 (0.06)
UDB 0502	100	11	11	±10	24 V DC	0.13 (0.06)
UDB 0507	100	10 VA (Max)	16 VA (Max)	±10	24 V AC/50-60 HZ	0.13 (0.06)
UDB 0509	100	10 VA (Max)	16 VA (Max)	±10	110 V AC/50-60 HZ	0.13 (0.06)
UDB 0510	100	10 VA (Max)	16 VA (Max)	±10	230 V AC/50-60 HZ	0.13 (0.06)

(a) = 110V - 230V solenoid valves must be built-in (EN-60204-1)

Under continuous service a maximum temperature will not compromise the functioning of the coil provided that the working position is ventilated



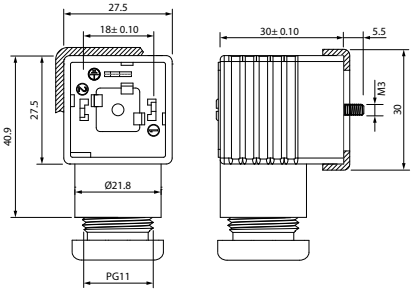

			Size	Color	Characteristics
*	CONU3 100 01		30 - 36 mm	BLACK	2 PINS
*	CONU3 202 40		30 - 36 mm	TRANSPARENT	LED + VDR 0 - 24V
*	CONU3 211 00		30 - 36 mm	TRANSPARENT	LED + VDR 110V
*	CONU3 225 00		30 - 36 mm	TRANSPARENT	LED + VDR 220V

*: UL 1977 AND CAN/CSA C22.2 NO. 182.3

VDR: Fitted with varistors as surge protection device.