AIGNEP

Poppet Valves Series

G1/8 ÷ G1 1/2 Poppet Valves
for Compressed Air



AF

Pg. 19.3

G1/8 ÷ G1 1/2 Poppet Valves
for Vacuum



AG

Pg. 19.13

Mixed Threaded Valves
G1/8 - G 1/4 - G1/2



AC

Pg. 19.25

Namur Valves



AC-N

Pg. 19.35

Solenoids and Connectors





Coils & Connectors

Pg. 19.41

Click here to view the Poppet Valves Series on our Website

AIGNEP

AIGNEP

POPPET VALVES



Poppet Valves Series

AC-N NAMUR VALVES

NAMUR valve

- Mixed commutation system (spool-poppet)
- High flow rate
- Quick response time
- High cycle rates
- Control: pneumatic, electric
- Suitable for rotating pneumatic actuators used in industrial plants for the distribution of fluids
- NAMUR VDI/VDE 3845 interface

Fluid	50 µm filtered air, with or without lubrication
Ambient temperature	14 ÷ 113 °F (-10 ÷ 45 °C)
Fluid temperature	14 ÷ 122 °F (-10 ÷ 50 °C)
Commutation system	poppet mixed
Ways/Positions	5/2 - 3/2* * = This can be achieved with isolating disc, standard supplied
Pressure	max 145 psi (10 bar)
Control	pneumatic, electric
Return	pneumomechanical spring, pneumatic, electric
Connections	1-3-5: G1/4 2-4: NAMUR interface
Nominal Ø	.315 (8 mm)
Nominal flow rate	1200 Nl/min
Valve body	zamak
Seals	nitrile rubber, polyurethane
Actuators	technopolymer
Spool	aluminum
Electropilot	AA series
Coil	U1-U3
Power consumption	3,5 W (DC) - 5 VA (AC)
Connector	UAM 5110
Voltage	12 V DC - 24 V DC - 24 V AC - 110 V AC - 230 V AC
Manual override	impulse screw - 2 positions

Reference standard

II 2G Ex h IIC T5 Gb

II 2D Ex h IIIC T100°C Db

II 3 GD c nA II T5 -10 °C ≤ Ta ≤ 45 °C IP65



MIXED

for heavy-duty applications



NAMUR INTERFACE

A-A' section

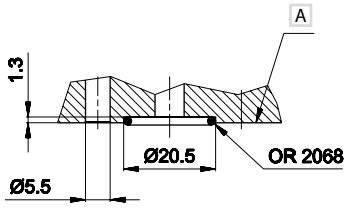

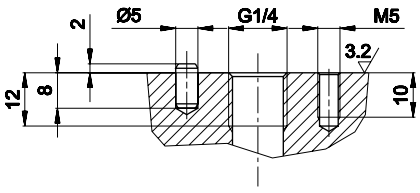

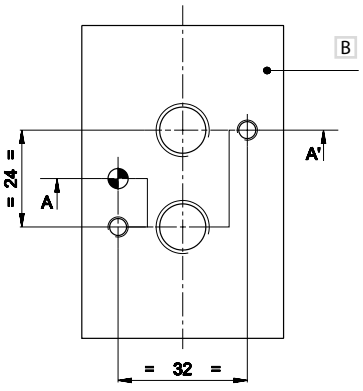

A Electrovalve surface

B Flange surface

SINGLE PNEUMATIC IMPULSE

Code	Way	Thread	Control	Return	Pressure psi (bar)	Response. Time (ms) En.	Response. Time (ms) De-en.	Weight lb (Kg)
 UAC N8100	5/2	G 1/4	pneumatic amplified	pneumo mechanical spring	33 ÷ 145 (2.3 ÷ 10)	10	10	1.24 (0.564)

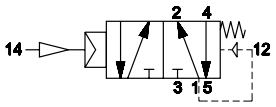

DOUBLE PNEUMATIC IMPULSE

Code	Way	Thread	Control	Return	Pressure psi (bar)	Response. Time (ms) En.	Response. Time (ms) De-en.	Weight Kg
 UAC N8120	5/2	G 1/4	pneumatic amplified	pneumatic amplified	12 ÷ 145 (0.8 ÷ 10)	6	6	1.24 (0.564)

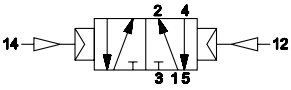

SINGLE PNEUMATIC IMPULSE

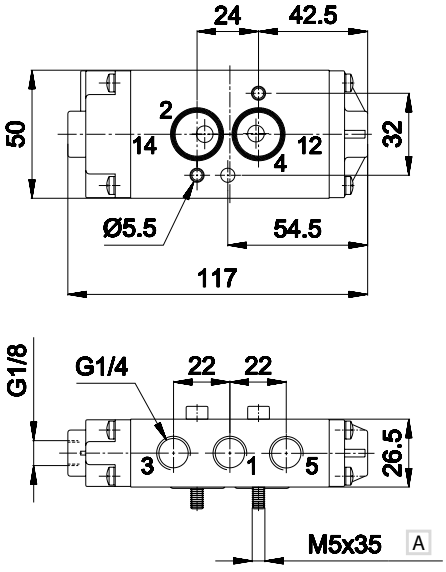

A ISO 4762

1 = Supply port
2 - 4 = Use
3 - 5 = Exhaust
14 = Control
12 = Return

DOUBLE PNEUMATIC IMPULSE

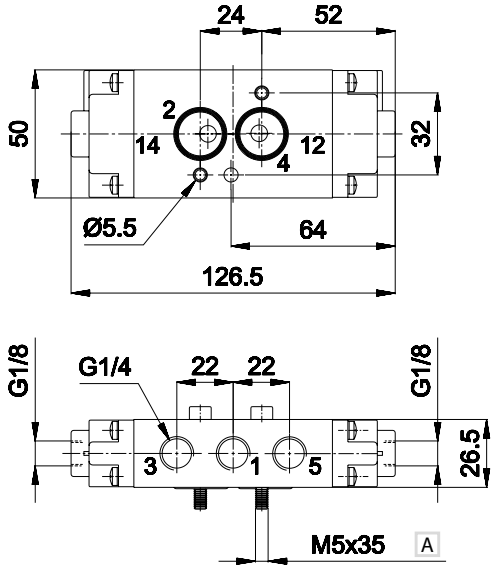

A ISO 4762

1 = Supply port
2 - 4 = Use
3 - 5 = Exhaust
14 = Control
12 = Return

Version 3/2: valves are supplied with proper fl at plug for closing unused way.
Solenoid valves are supplied without coil / connector

SINGLE ELECTRICAL IMPULSE

	Code	Way	Thread	Control	Return	Pressure psi (bar)	Response. Time (ms) En.	De-en.	Weight lb (Kg)	
	UAC N8500	5/2	G 1/4	electric amplified	pneumo mechanical spring	33 ÷ 145 (2.3 ÷ 10)	22	22	1.32 (0.6)	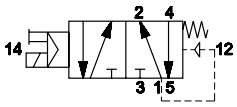

DOUBLE ELECTRICAL IMPULSE

	Code	Way	Thread	Control	Return	Pressure psi (bar)	Response. Time (ms) En.	De-en.	Weight lb (Kg)	
	UAC N8520	5/2	G 1/4	electric amplified	electric amplified	12 ÷ 145 (0.8 ÷ 10)	14	14	1.40 (0.636)	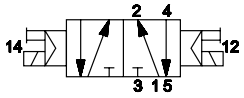

SINGLE ELECTRICAL IMPULSE

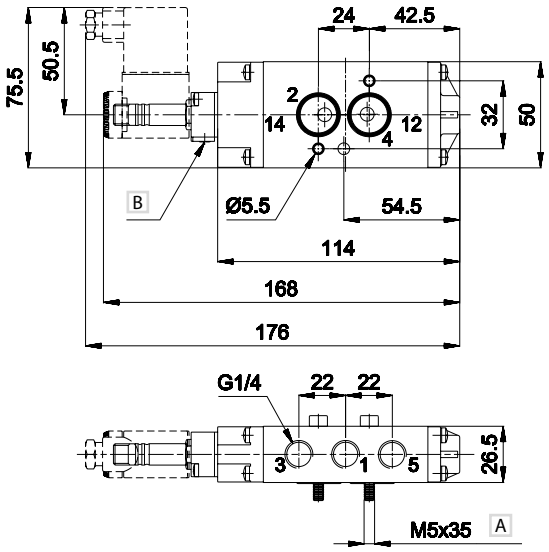

A ISO 4762

1 = Supply port
2 - 4 = Use
3 - 5 = Exhaust
14 = Control
12 = Return

DOUBLE ELECTRICAL IMPULSE

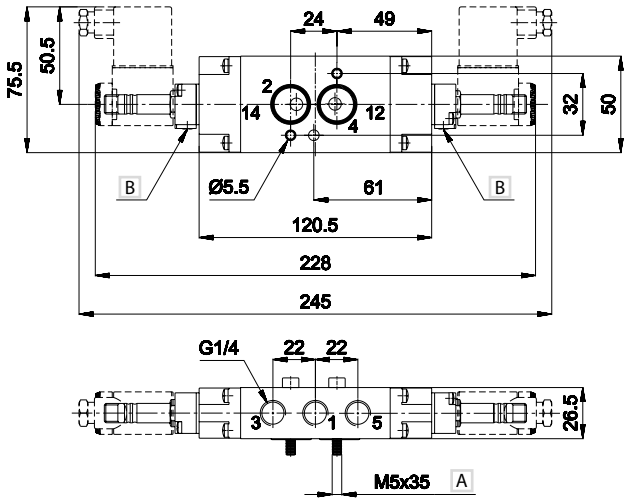

A ISO 4762

B Manual control

1 = Supply port
2 - 4 = Use
3 - 5 = Exhaust
14 = Control
12 = Return

Version 3/2: valves are supplied with proper fl at plug for closing unused way.
Solenoid valves are supplied without coil / connector

COILS

CSA/UL

Possibility of replacement without intervention in the pneumatic circuit

Other voltages available upon request

360° rotation on the pilot. Coil winding: H class

Ambient temperature: +14 ÷ +113 °F. Fluid temperature: +14 ÷ +203 °F.

The solenoid valves functioning with 100V-230V must be incorporated (EN60204-1)

Under continuous service a maximum temperature will not compromise the functioning of the coil provided that the working position is ventilated.

Protection class IP65, if used with connector.

U1 22 MM COIL



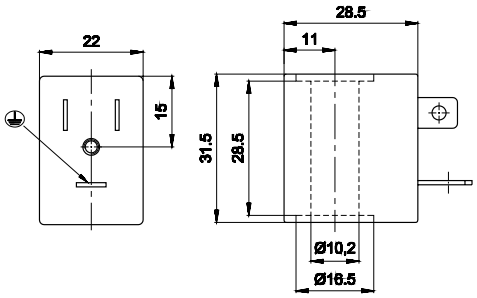

22 mm

10 mm

Code	Duty cycle ED (a) %	Power consumption W		Tolerance tension %	Rated voltage	Weight lb (Kg)
		Hold	Inrush			
UDA 0050	100	3,5	3,5	±10	12 V DC	0.13 (0.06)
UDA 0051	100	3,5	3,5	±10	24 V DC	0.13 (0.06)
UDA 0106	100	5,4 VA (Max)	7,8 VA (Max)	±10	24 V AC/50-60 HZ	0.13 (0.06)
UDA 0108	100	5,4 VA (Max)	7,8 VA (Max)	±10	110 V AC/50-60 HZ	0.13 (0.06)
UDA 0124	100	5,4 VA (Max)	7,8 VA (Max)	±10	230 V AC/50-60 HZ	0.13 (0.06)



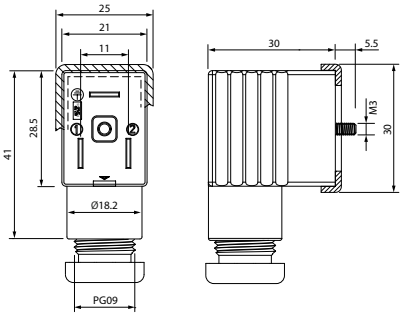

	Code		Size	Color	Characteristics
*	CONU1 000 01		.866 (22 mm)	BLACK	2 PINS
*	CONU2 024 00		.866 (22 mm)	TRANSPARENT	LED + VDR 0 - 24V
*	CONU2 110 00		.866 (22 mm)	TRANSPARENT	LED + VDR 110V
*	CONU2 250 00		.866 (22 mm)	TRANSPARENT	LED + VDR 220V

*: UL 1977 AND CAN/CSA C22.2 NO. 182.3

VDR: Fitted with varistors as surge protection device.

(a) = 110V - 230V solenoid valves must be built-in (EN-60204-1)

In continuous operation, the operating temperature does not affect the coil's performance, provided it is installed in a well-ventilated area

U3 30 MM COIL



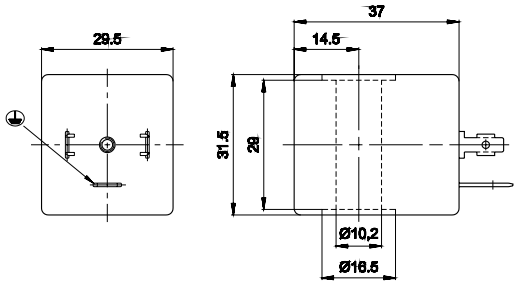

30 mm

10 mm

Code	Duty cycle ED (a) %	Power consumption W		Tolerance tension %	Rated voltage	Weight Kg
		Hold	Inrush			
UDC 0301	100	2,5	2,5	±10	12 V DC	0.18 (0.08)
UDC 0302	100	2,5	2,5	±10	24 V DC	0.18 (0.08)
UDC 0307	100	3,3 VA (Max)	5 VA (Max)	±10	24 V AC/50-60 HZ	0.18 (0.08)
UDC 0309	100	3,3 VA (Max)	5 VA (Max)	±10	110 V AC/50-60 HZ	0.18 (0.08)
UDC 0310	100	3,3 VA (Max)	5 VA (Max)	±10	230 V AC/50-60 HZ	0.18 (0.08)



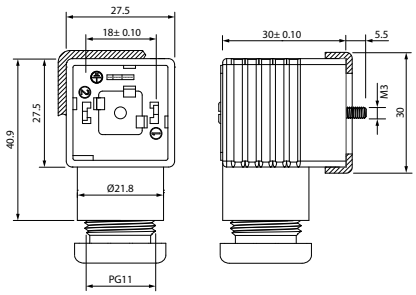

			Size	Color	Characteristics
*	CONU3 100 01	c UL us	30 - 36 mm	BLACK	2 PINS
*	CONU3 202 40	c UL us	30 - 36 mm	TRANSPARENT	LED + VDR 0 - 24V
*	CONU3 211 00	c UL us	30 - 36 mm	TRANSPARENT	LED + VDR 110V
*	CONU3 225 00	c UL us	30 - 36 mm	TRANSPARENT	LED + VDR 220V

*: UL 1977 AND CAN/CSA C22.2 NO. 182.3

VDR: Fitted with varistors as surge protection device.