AIGNEP

Actuator Series

Cartridge Cylinders
Ø 6-16 mm



CA - CAF Series
Pg. 20.3

Mini Cylinders ISO 6432
Ø 8-25 mm



Mini Series
Pg. 20.5

Mini Stainless Steel Cylinders
ISO 6432 Ø 16-25 mm



Mini Stainless Steel Series
Pg. 20.13

Limited Space
Ø 32-63 mm



A95 Series
Pg. 20.16

Compact Cylinders
Ø 12-100 mm



Q Series
Pg. 20.23

ISO 15552 Cylinders
Ø 32-125 mm



L Series
Pg. 20.36

ISO 6431 Cylinders
Ø 160-320 mm



E Series
Pg. 20.45

Stainless Steel ISO 15552 Cylinders
Ø 32-125 mm



V Series
Pg. 20.47

Twin Rod Cylinders
Ø 32-100 mm



NHA Series
Pg. 20.50

Compact Cylinders ISO 21287
Ø 20-100 mm



W Series
Pg. 20.54

Cylinder Accessories
ISO 6431 - ISO 15552 - ISO 21287



Accessories
Pg. 20.62

Magnetic Position Sensing Switches



Sensors
Pg. 20.72

Rodless Actuator Series

Rodless Cylinders Standard Version



S1 Series
Pg. 20.82

Rodless Cylinder with Integrated Guides in Technopolymer



S5 Series
Pg. 20.91

Click here to view the Actuator Series on our Website

AIGNEP

AIGNEP

PNEUMATIC ACTUATORS



Actuator Series

P.A.

SERIES W - COMPACT CYLINDERS - ISO 21287

TECHNICAL CHARACTERISTICS

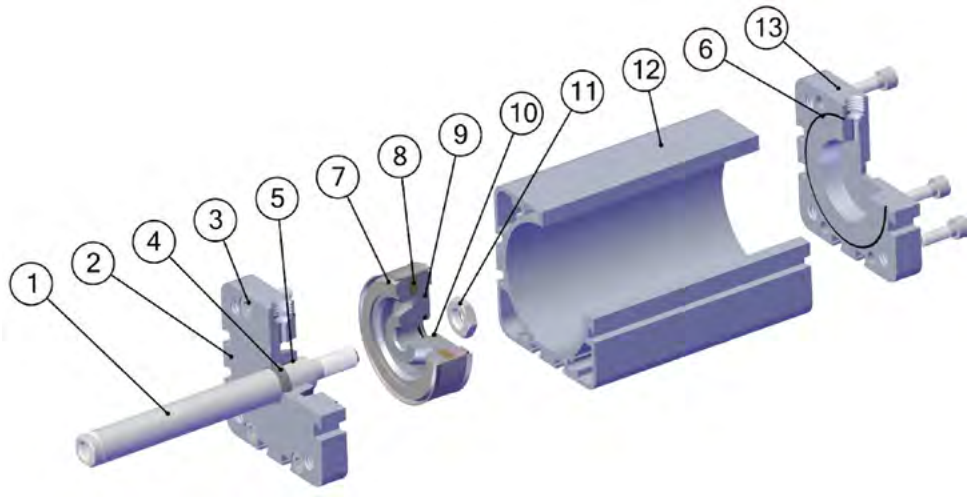





Component Parts and Materials

1	(ø12-25) 303 stainless steel piston rod (ø32-100) chrome-plated steel piston rod
2	Anodized aluminum end cap
3	Zinc-plated steel screw
4	Polyurethane rod seal
5	Sintered bronze rod bearing
6	NBR O-ring seals
7	Polyurethane piston seal
8	Bonded ferrite magnet
9	Aluminum piston
10	NBR O-ring seals (ø32-40)
11	Zinc-plated steel piston nut
12	Anodized aluminum body
13	Anodized aluminum end cap

Reference Standard

1907/2006 REACH✓ | 2011/65/CE RoHS ✓ | PED 2014/68/UE | SILICON FREE | ATEX 2014/34/UE

Pressures

14.5 psi (1 bar / 0.1 MPa)
145 psi (10 bar / 1 MPa)

Temperatures

32 °F ~ 176 °F
0 °C ~ 80 °C (- 4 °F / -20 °C with dry air)

Media

Filtered and lubricated or non-lubricated compressed air.

Functions

Single and double-acting magnetic. Single, through piston rod, and anti rotation.

Bores

from 20 to 100 mm

Standard Strokes

from 5 to 200 mm

FORCES, SPRING LOADS, AND AIR CONSUMPTION

Extend and Retract Forces

Cylinder Ø	Piston Rod Ø	Piston Area mm²	Operating pressure bar									
			1	2	3	4	5	6	7	8	9	10
			Output force (N)									
20	10	Extend = 314	28	55	85	110	140	170	195	220	250	280
		Retract = 235	21	42	60	85	105	125	150	170	190	210
25	10	Extend = 490	44	88	132	176	220	264	308	352	396	440
		Retract = 412	36	72	108	144	180	216	252	288	324	360
32	12	Extend = 804	72	144	216	288	360	432	504	576	648	720
		Retract = 691	62	124	186	248	310	372	434	496	558	620
40	12	Extend = 1257	110	220	330	440	550	660	770	880	990	1100
		Retract = 1144	100	200	300	400	500	600	700	800	900	1000
50	16	Extend = 1963	175	350	525	700	875	1050	1225	1400	1575	1750
		Retract = 1762	155	310	465	620	775	930	1085	1240	1395	1550
63	16	Extend = 3117	280	560	840	1120	1400	1680	1960	2240	2520	2800
		Retract = 2916	260	520	780	1040	1300	1560	1820	2080	2340	2600
80	20	Extend = 5027	450	900	1350	1800	2250	2700	3150	3600	4050	4500
		Retract = 4712	420	840	1260	1680	2100	2520	2940	3360	3780	4200
100	25	Extend = 7854	700	1400	2100	2800	3500	4200	4900	5650	6360	7000
		Retract = 7363	660	1320	1980	2640	3300	3960	4620	5280	5940	6600

Spring Loads

Cylinder Ø	Spring load	Stroke (mm)				
		5	10	15	20	25
		Output force (N)				
20	Load of spring at rest	15.7	14	12.2	10.4	8.7
	Load of compressed spring	17.4	17.4	17.4	17.4	17.4
25	Load of spring at rest	19.5	18.5	17.3	16	15
	Load of compressed spring	22	22	22	22	22
32	Load of spring at rest	27.8	25.3	22.8	20.2	17.7
	Load of compressed spring	30	30	30	30	30
40	Load of spring at rest	36.4	34	31.7	29.5	27
	Load of compressed spring	36	36	36	36	36
50	Load of spring at rest	32	30.5	29	27.8	26.5
	Load of compressed spring	35	35	35	35	35
63	Load of spring at rest	61	58.5	56.3	53.5	51.5
	Load of compressed spring	64.8	64.8	64.8	64.8	64.8
80	Load of spring at rest	91.3	88	85	82	78.7
	Load of compressed spring	94	94	94	94	94
100	Load of spring at rest	150	145	140	134	129
	Load of compressed spring	156	156	156	156	156

Air consumption

Cylinder Ø	Piston Rod Ø	Piston Area mm²	Operating pressure bar									
			1	2	3	4	5	6	7	8	9	10
			Air consumption for each 10 mm of stroke (Nl)									
20	10	Extend = 314	0.006	0.009	0.013	0.016	0.019	0.022	0.025	0.028	0.031	0.035
		Retract = 235	0.005	0.007	0.009	0.012	0.014	0.016	0.019	0.021	0.024	0.026
25	10	Extend = 490	0.010	0.015	0.020	0.025	0.029	0.034	0.039	0.044	0.049	0.054
		Retract = 412	0.008	0.012	0.016	0.021	0.025	0.029	0.033	0.037	0.041	0.045
32	12	Extend = 804	0.016	0.024	0.032	0.040	0.048	0.056	0.064	0.072	0.080	0.088
		Retract = 691	0.014	0.021	0.028	0.035	0.041	0.048	0.055	0.062	0.069	0.076
40	12	Extend = 1257	0.025	0.038	0.050	0.063	0.075	0.088	0.101	0.113	0.126	0.138
		Retract = 1144	0.023	0.034	0.046	0.057	0.069	0.080	0.092	0.103	0.114	0.126
50	16	Extend = 1963	0.039	0.059	0.079	0.098	0.118	0.137	0.157	0.177	0.196	0.216
		Retract = 1762	0.035	0.053	0.070	0.088	0.106	0.123	0.141	0.159	0.176	0.194
63	16	Extend = 3117	0.062	0.094	0.125	0.156	0.187	0.218	0.249	0.281	0.312	0.343
		Retract = 2916	0.058	0.087	0.117	0.146	0.175	0.204	0.233	0.262	0.292	0.321
80	20	Extend = 5027	0.101	0.151	0.201	0.251	0.302	0.352	0.402	0.452	0.503	0.553
		Retract = 4712	0.094	0.141	0.188	0.236	0.283	0.330	0.377	0.424	0.471	0.518
100	25	Extend = 7854	0.157	0.236	0.314	0.393	0.471	0.550	0.628	0.707	0.785	0.864
		Retract = 7363	0.147	0.221	0.295	0.368	0.442	0.515	0.589	0.663	0.736	0.810

Series	Version	Ø (mm)	Stroke (mm)
W B		0 2 0	0 0 2 5

- ▲ WB - WBM — Single acting - magnetic
- ▲ WD - WDM — Single acting - magnetic - spring extend
- ● WF - WFM — Double acting - magnetic
- ● WJ - WJM — Double acting - cushioned - magnetic with double rod end
- # WFA — Double acting - magnetic - anti rotation

Version:
- = Standard female rod
- M = Male rod (NO WFA)

Ø (mm):
020, 025, 032, 040, 050, 063, 080, 100

Stroke (mm):
0005, 0010, 0015, 0020, 0025, 0030, 0040, 0050, 0060, 0080, 0100, 0125, 0150, 0160, 0200

Intermediate or longer strokes are available upon request.

Ø (mm)	Stroke (mm)													
	5	10	15	20	25	30	40	50	60	80	100	125	150	200
20	▲●#	▲●#	▲●#	▲●#	▲●#	●#	●#	●#						
25	▲●#	▲●#	▲●#	▲●#	▲●#	●#	●#	●#						
32	▲●#	▲●#	▲●#	▲●#	▲●#	●#	●#	●#	●#	●#	●	●	●	
40	▲●#	▲●#	▲●#	▲●#	▲●#	●#	●#	●#	●#	●#	●	●	●	
50	▲●#	▲●#	▲●#	▲●#	▲●#	●#	●#	●#	●#	●#	●	●	●	●
63	▲●#	▲●#	▲●#	▲●#	▲●#	●#	●#	●#	●#	●#	●	●	●	●
80	▲●#	▲●#	▲●#	▲●#	▲●#	●#	●#	●#	●#	●#	●	●	●	●
100	▲●#	▲●#	▲●#	▲●#	▲●#	●#	●#	●#	●#	●#	●	●	●	●

WB - WBM

SINGLE ACTING - MAGNETIC

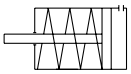

Ø 20-25



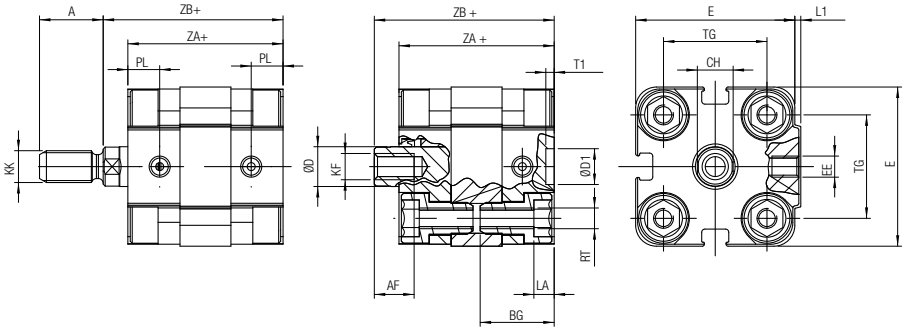

Ø 32-40-50-63-80-100

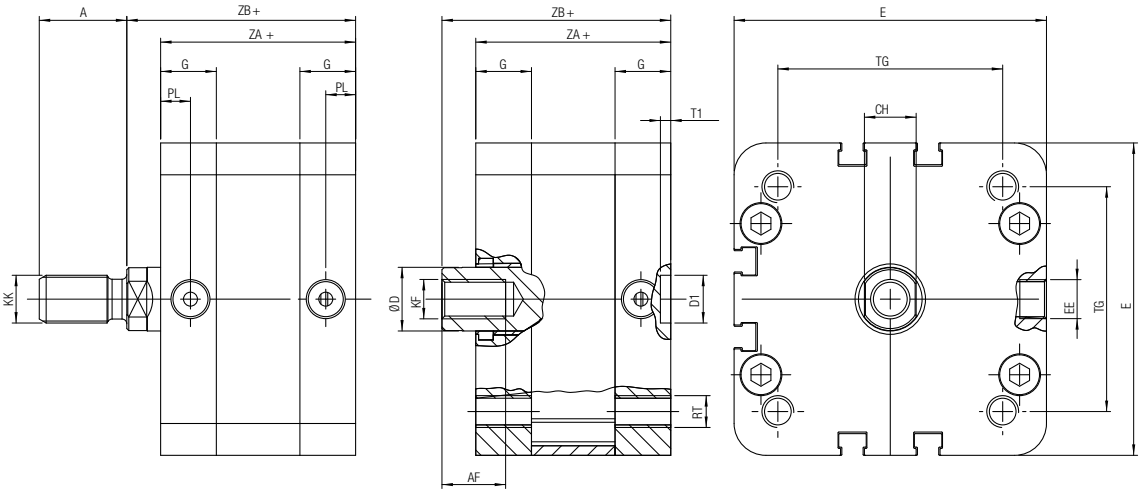

* Like UNITOP

\+ = Add Stroke

Ø	Ø D	E	L1	A	KK	CH	AF	KF	BG	LA	RT	G	TG	EE	PL	Ø D1	T1	ZA+	ZB+
*20	10	36	1.5	16	M8x1.25	9	10	M6	18.5	5	M5	-	22	M5	8	*6	*4	*39	*45
*25	10	40	1.5	16	M8x1.25	9	10	M6	18.5	5	M5	-	26	M5	8	*6	*4	39	45.5
32	12	49	-	19	M10x1.25	10	12	M8	-	-	M6	14.5	32.5	G1/8	7.5	9	2.1	44	51
40	12	55	-	19	M10x1.25	10	12	M8	-	-	M6	15	38	G1/8	7.5	9	2.1	45	52
50	16	68	-	22	M12x1.25	13	16	M10	-	-	M8	14.5	46.5	G1/8	7.5	12	2.6	45	53
63	16	78.5	-	22	M12x1.25	13	16	M10	-	-	M8	14	56.5	G1/8	7.5	12	2.6	49	57.5
80	20	98	-	28	M16x1.5	17	20	M12	-	-	M10	15.5	72	G1/8	7.5	12	2.6	54	64
100	25	115	-	28	M16x1.5	22	20	M12	-	-	M10	20	89	G1/8	7.5	12	2.6	67	77

WD - WDM

SINGLE ACTING - MAGNETIC - SPRING EXTEND



Ø 20-25



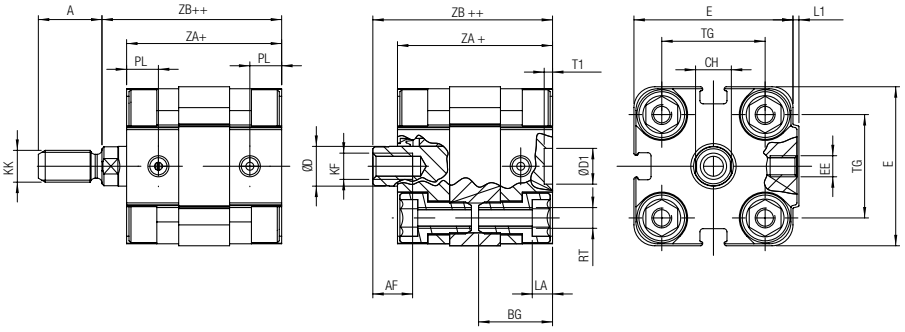

Ø 32-40-50-63-80-100

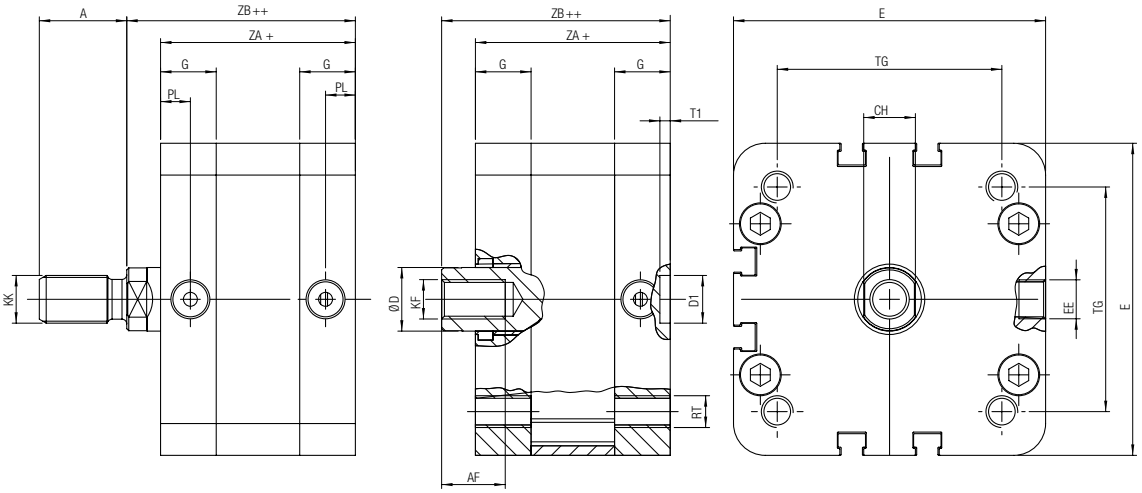

* Like UNITOP

\+ = Add Stroke

++ = Double stroke dimension and add it

Ø	Ø D	E	L1	A	KK	CH	AF	KF	BG	LA	RT	G	TG	EE	PL	Ø D1	T1	ZA+	ZB++
*20	10	36	1.5	16	M8x1.25	9	10	M6	18.5	5	M5	-	22	M5	8	*6	*4	*39	*45
*25	10	40	1.5	16	M8x1.25	9	10	M6	18.5	5	M5	-	26	M5	8	*6	*4	39	45.5
32	12	49	-	19	M10x1.25	10	12	M8	-	-	M6	14.5	32.5	G1/8	7.5	9	2.1	44	51
40	12	55	-	19	M10x1.25	10	12	M8	-	-	M6	15	38	G1/8	7.5	9	2.1	45	52
50	16	68	-	22	M12x1.25	13	16	M10	-	-	M8	14.5	46.5	G1/8	7.5	12	2.6	45	53
63	16	78.5	-	22	M12x1.25	13	16	M10	-	-	M8	14	56.5	G1/8	7.5	12	2.6	49	57.5
80	20	98	-	28	M16x1.5	17	20	M12	-	-	M10	15.5	72	G1/8	7.5	12	2.6	54	64
100	25	115	-	28	M16x1.5	22	20	M12	-	-	M10	20	89	G1/8	7.5	12	2.6	67	77

WF - WFM

DOUBLE ACTING - MAGNETIC

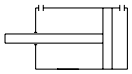

Ø 20-25



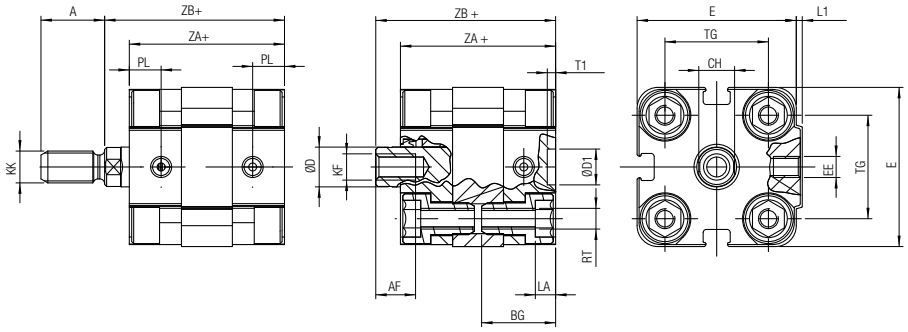

Ø 32-40-50-63-80-100

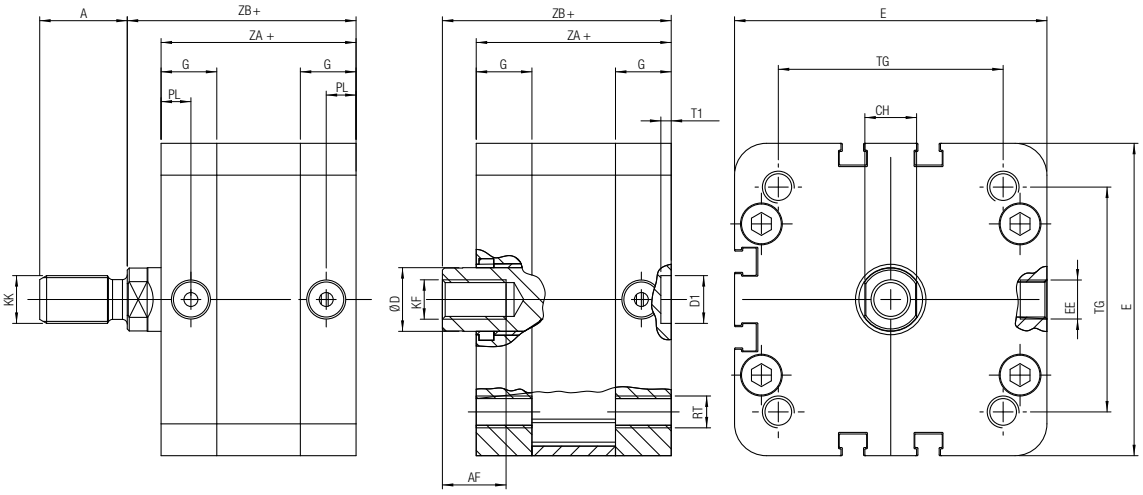

* Like UNITOP

\+ = Add Stroke

Ø	Ø D	E	L1	A	KK	CH	AF	KF	BG	LA	RT	G	TG	EE	PL	Ø D1	T1	ZA+	ZB+
*20	10	36	1.5	16	M8x1.25	9	10	M6	18.5	5	M5	-	22	M5	8	*6	*4	*39	*45
*25	10	40	1.5	16	M8x1.25	9	10	M6	18.5	5	M5	-	26	M5	8	*6	*4	39	45.5
32	12	49	-	19	M10x1.25	10	12	M8	-	-	M6	14.5	32.5	G1/8	7.5	9	2.1	44	51
40	12	55	-	19	M10x1.25	10	12	M8	-	-	M6	15	38	G1/8	7.5	9	2.1	45	52
50	16	68	-	22	M12x1.25	13	16	M10	-	-	M8	14.5	46.5	G1/8	7.5	12	2.6	45	53
63	16	78.5	-	22	M12x1.25	13	16	M10	-	-	M8	14	56.5	G1/8	7.5	12	2.6	49	57.5
80	20	98	-	28	M16x1.5	17	20	M12	-	-	M10	15.5	72	G1/8	7.5	12	2.6	54	64
100	25	115	-	28	M16x1.5	22	20	M12	-	-	M10	20	89	G1/8	7.5	12	2.6	67	77

WJ - WJM

DOUBLE ACTING - MAGNETIC WITH DOUBLE ROD END

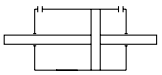

Ø 20-25



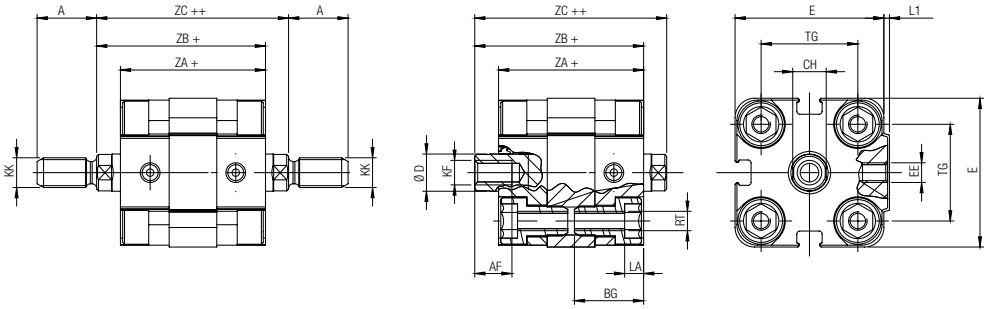

Ø 32-40-50-63-80-100

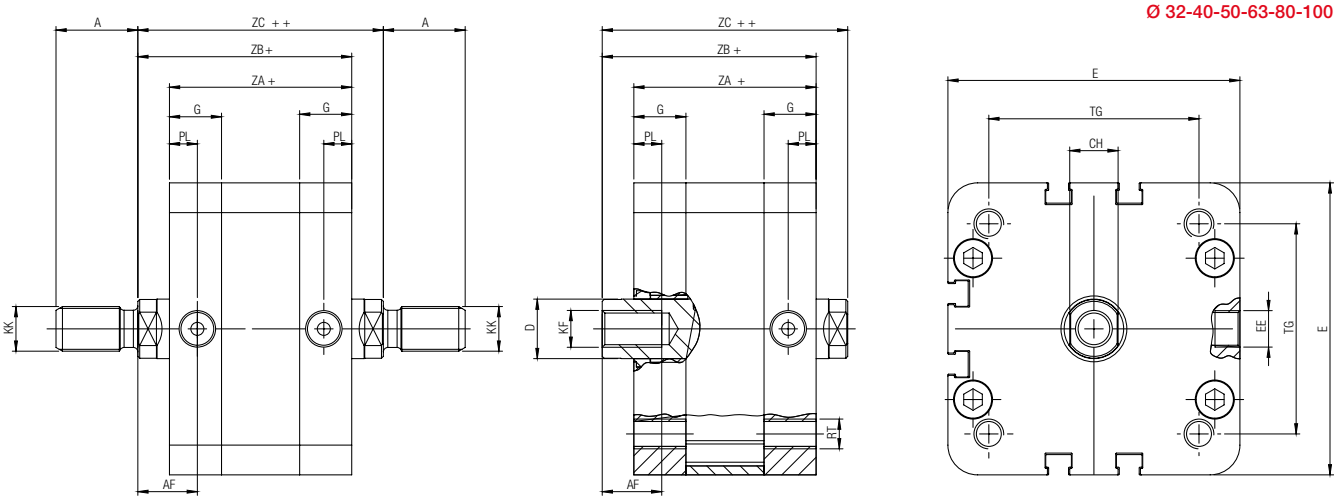

* Like UNITOP

\+ = Add Stroke

++ = Double stroke dimension and add it

Ø	Ø D	E	L1	A	KK	CH	AF	KF	BG	LA	RT	G	TG	EE	PL	ZA+	ZB+	ZC++
*20	10	36	1.5	16	M8x1.25	9	10	M6	18.5	5	M5	-	22	M5	8	*39	*45	*51
25	10	40	1.5	16	M8x1.25	9	10	M6	18.5	5	M5	-	26	M5	8	39	45.5	51.5
32	12	49	-	19	M10x1.25	10	12	M8	-	-	M6	14.5	32.5	G1/8	7.5	44	51	58
40	12	55	-	19	M10x1.25	10	12	M8	-	-	M6	15	38	G1/8	7.5	45	52	59
50	16	68	-	22	M12x1.25	13	16	M10	-	-	M8	14.5	46.5	G1/8	7.5	45	53	61
63	16	78.5	-	22	M12x1.25	13	16	M10	-	-	M8	14	56.5	G1/8	7.5	49	57.5	66
80	20	98	-	28	M16x1.5	17	20	M12	-	-	M10	15.5	72	G1/8	7.5	54	64	74
100	25	115	-	28	M16x1.5	22	20	M12	-	-	M10	20	89	G1/8	7.5	67	77	87

WFA

DOUBLE ACTING - MAGNETIC - ANTI ROTATION

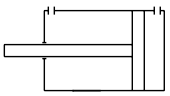



Ø 20-25

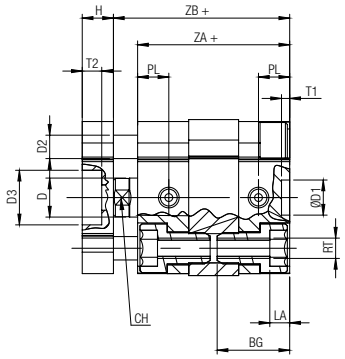

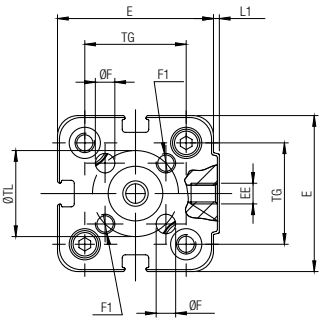

Ø 32-40-50-63-80-100

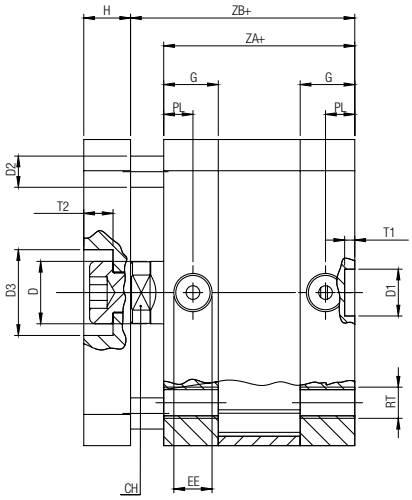

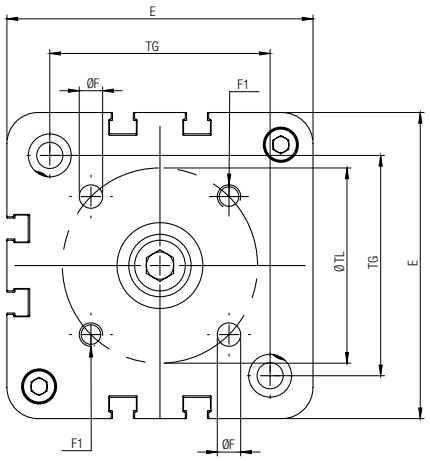

* Like UNITOP

\+ = Add Stroke

Ø	Ø D	E	L1	CH	AF	KF	BG	LA	RT	G	TG	EE	PL	Ø D1	T1	Ø TL	H	Ø F	F1	D2	D3	T2	ZA+	ZB+
*20	10	36	1.5	9	10	M6	18.5	5	M5	-	22	M5	8	*6	*4	17	8	4	M4	6	10.5	5	*39	*45
*25	10	40	1.5	9	10	M6	18.5	5	M5	-	26	M5	8	*6	*4	22	8	5	M5	6	14	5	39	45.5
32	12	49	-	10	12	M8	-	-	M6	14.5	32.5	G1/8	7.5	9	2.1	28	10	5	M5	6	17	6	44	51
40	12	55	-	10	12	M8	-	-	M6	15	38	G1/8	7.5	9	2.1	33	10	5	M5	6	17	6	45	52
50	16	68	-	13	16	M10	-	-	M8	14.5	46.5	G1/8	7.5	12	2.6	42	12	6	M6	8	22	7.5	45	53
63	16	78.5	-	13	16	M10	-	-	M8	14	56.5	G1/8	7.5	12	2.6	50	12	6	M6	8	22	7.5	49	57.5
80	20	98	-	17	20	M12	-	-	M10	15.5	72	G1/8	7.5	12	2.6	65	14	8	M8	12	24	10.5	54	64
100	25	115	-	22	20	M12	-	-	M10	20	89	G1/8	7.5	12	2.6	80	14	10	M10	12	24	10.5	67	77