AIGNEP

Actuator Series

Cartridge Cylinders
Ø 6-16 mm



CA - CAF Series
Pg. 20.3

Mini Cylinders ISO 6432
Ø 8-25 mm



Mini Series
Pg. 20.5

Mini Stainless Steel Cylinders
ISO 6432 Ø 16-25 mm



Mini Stainless Steel Series
Pg. 20.13

Limited Space
Ø 32-63 mm



A95 Series
Pg. 20.16

Compact Cylinders
Ø 12-100 mm



Q Series
Pg. 20.23

ISO 15552 Cylinders
Ø 32-125 mm



L Series
Pg. 20.36

ISO 6431 Cylinders
Ø 160-320 mm



E Series
Pg. 20.45

Stainless Steel ISO 15552 Cylinders
Ø 32-125 mm



V Series
Pg. 20.47

Twin Rod Cylinders
Ø 32-100 mm



NHA Series
Pg. 20.50

Compact Cylinders ISO 21287
Ø 20-100 mm



W Series
Pg. 20.54

Cylinder Accessories
ISO 6431 - ISO 15552 - ISO 21287



Accessories
Pg. 20.62

Magnetic Position Sensing Switches



Sensors
Pg. 20.72

Rodless Actuator Series

Rodless Cylinders Standard Version



S1 Series
Pg. 20.82

Rodless Cylinder with Integrated Guides in Technopolymer



S5 Series
Pg. 20.91

Click here to view the Actuator Series on our Website

AIGNEP

AIGNEP

PNEUMATIC ACTUATORS



Actuator Series

P.A.

SERIES V - STAINLESS STEEL - ISO 15552

TECHNICAL CHARACTERISTICS

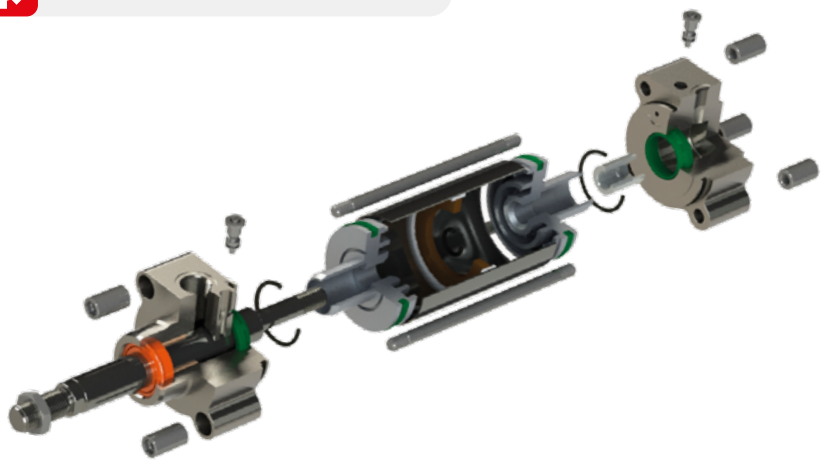



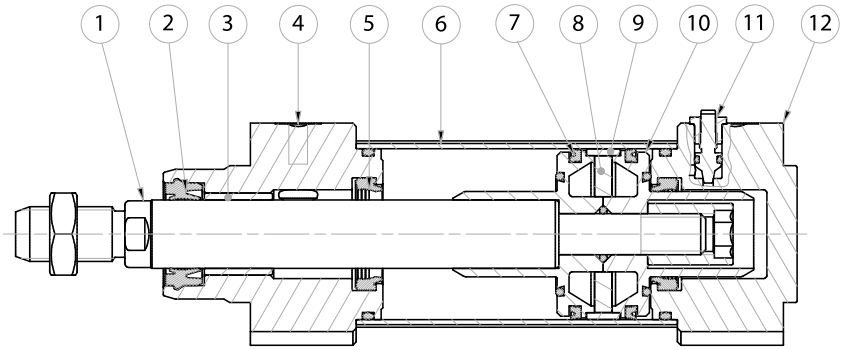

Component Parts and Materials

1 316 stainless steel piston rod
2 Rod seal
3 Sintered bronze bushing
4 304 stainless steel end cap
5 PU seal
6 304 stainless steel tube
7 Piston seal
8 Bonded ferrite magnet
9 Piston wear band
10 Aluminum piston
11 316 stainless steel cushion adjustment screw
12 304 stainless steel end cap

Reference Standard

1907/2006 REACH✓ | 2011/65/CE RoHS | PED 2014/68/UE | SILICON FREE

Pressures

14.5 psi (1 bar / 0.1 MPa)
145 psi (10 bar / 1 MPa)

Temperatures

32 °F ~ 176 °F
0 °C ~ 80 °C (- 4 °F / -20 °C with dry air)

Media

Filtered and lubricated or non-lubricated compressed air.

Functions

Double-acting cushioned magnetic
Single or through piston rod.

Bores

from 32 to 125 mm

Standard Strokes

from 25 to 1000 mm

FORCES, SPRING LOADS, AND AIR CONSUMPTION

SEE PG. 20.34-20.35

Series	Ø (mm)	Stroke (mm)	Special version
V H I	0 3 2	0 0 2 5	V S

- ▲ VHI Double acting - cushioned - magnetic (AISI 304)
- ▲ VLI Double acting - cushioned - magnetic with double rod end (AISI 304)
- ▲ VHJ Double acting - cushioned - magnetic (AISI 316) (On request)

Ø (mm): 032, 040, 050, 063, 080, 100, 125

Stroke (mm): 0025, 0050, 0075, 0080, 0100, 0125, 0150, 0160, 0200, 0250, 0300, 0320, 0350, 0400, 0450, 0500, 0600, 0700, 0800, 0900, 1000

Intermediate or longer strokes are available upon request. Maximum stroke 2700 mm.

- VS Only Rod Seals in FKM
- V All FKM seals

Ø (mm)	Stroke (mm)																				
	25	50	75	80	100	125	150	160	200	250	300	320	350	400	450	500	600	700	800	900	1000
32	▲	▲	▲	▲	▲	▲	▲	▲	▲	▲	▲	▲	▲	▲	▲	▲	▲	▲	▲	▲	▲
40	▲	▲	▲	▲	▲	▲	▲	▲	▲	▲	▲	▲	▲	▲	▲	▲	▲	▲	▲	▲	▲
50	▲	▲	▲	▲	▲	▲	▲	▲	▲	▲	▲	▲	▲	▲	▲	▲	▲	▲	▲	▲	▲
63	▲	▲	▲	▲	▲	▲	▲	▲	▲	▲	▲	▲	▲	▲	▲	▲	▲	▲	▲	▲	▲
80	▲	▲	▲	▲	▲	▲	▲	▲	▲	▲	▲	▲	▲	▲	▲	▲	▲	▲	▲	▲	▲
100	▲	▲	▲	▲	▲	▲	▲	▲	▲	▲	▲	▲	▲	▲	▲	▲	▲	▲	▲	▲	▲
125	▲	▲	▲	▲	▲	▲	▲	▲	▲	▲	▲	▲	▲	▲	▲	▲	▲	▲	▲	▲	▲

VHI

DOUBLE ACTING - CUSHIONED - MAGNETIC



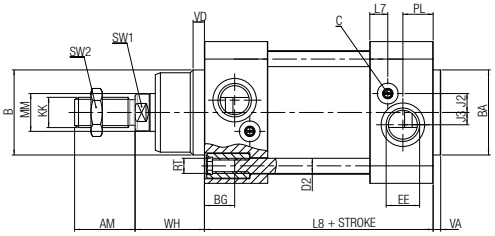

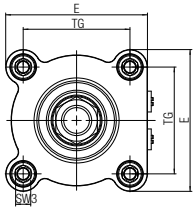

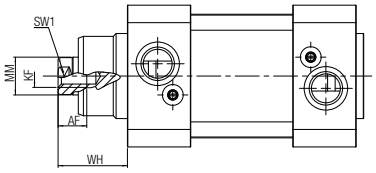

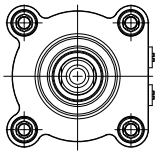

Ø	AM	AF	ØB(d11)	ØBA (d11)	BG	ØD2	E	EE	J2	J3	KF	KK	L2	L7	L8+	Ømm	PL	RT	SW1	SW2	SW3	TG	VA	VD	WH
32	22	12	30	30	16	6	48	G1/8"	6.6	5.3	M6	M10x1.25	18	7.2	94	12	13	M6	10	17	6	32.5	4	5	26
40	24	12	35	35	16	6	52	G1/4"	8.5	5	M8	M12x1.25	22	9.2	105	16	14	M6	13	19	6	38	4	5	30
50	32	16	40	40	16	8	65	G1/4"	8	6	M8	M16x1.5	25.5	9	106	20	14	M8	17	24	8	46.5	4	6	37
63	32	16	45	45	16	8	75	G3/8"	10	6.5	M10	M16x1.5	26	9.5	121	20	16	M8	17	24	8	56.5	4	6	37
80	40	20	45	45	18	10	95	G3/8"	8	8	M10	M20x1.5	32	11	128	25	16	M10	22	30	10	72	4	7	46
100	40	20	55	55	18	10	115	G1/2"	15	7	M12	M20x1.5	38	12	138	25	18	M10	22	30	10	89	4	7	51
125	54	32	60	60	20	12	140	G1/2"	13	7	M16	M27x2	46	12	160	32	18	M12	27	41	-	110	6	10	65

VLI

DOUBLE ACTING - CUSHIONED - MAGNETIC WITH DOUBLE ROD END

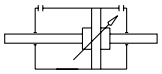



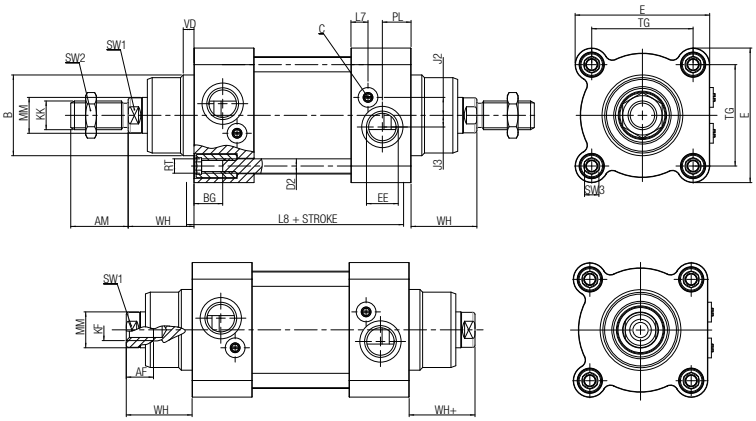

Ø	AM	AF	ØB (d11)	BG	ØD2	E	EE	J2	J3	KF	KK	L2	L7	L8+	Ømm	PL	RT	SW1	SW2	SW3	TG	VA	VD	WH	WH
32	22	12	30	16	6	48	G1/8"	6.6	5.3	M6	M10x1.25	18	7.2	94	12	13	M6	10	17	6	32.5	4	5	26	26
40	24	12	35	16	6	52	G1/4"	8.5	5	M8	M12x1.25	22	9.2	105	16	14	M6	13	19	6	38	4	5	30	30
50	32	16	40	16	8	65	G1/4"	8	6	M8	M16x1.5	25.5	9	106	20	14	M8	17	24	8	46.5	4	6	37	37
63	32	16	45	16	8	75	G3/8"	10	6.5	M10	M16x1.5	26	9.5	121	20	16	M8	17	24	8	56.5	4	6	37	37
80	40	20	45	18	10	95	G3/8"	8	8	M10	M20x1.5	32	11	128	25	16	M10	22	30	10	72	4	7	46	46
100	40	20	55	18	10	115	G1/2"	15	7	M12	M20x1.5	38	12	138	25	18	M10	22	30	10	89	4	7	51	51
125	54	32	60	20	12	140	G1/2"	13	7	M16	M27x2	46	12	160	32	18	M12	27	41	-	110	6	10	65	65

FORCES, SPRING LOADS, AND AIR CONSUMPTION

Compatible for Series E - V - N - L

Extend and Retract Forces

Cylinder	Piston Rod	Piston Area	Operating pressure									
Ø	Ø	mm²	bar									
			1	2	3	4	5	6	7	8	9	10
			Output force N									
32	12	Extend = 804	72	144	216	288	360	432	504	576	648	720
		Retract = 691	62	124	186	248	310	372	434	496	558	620
40	16	Extend = 1257	110	220	330	440	550	660	770	880	990	1100
		Retract = 1056	95	190	285	380	475	570	665	760	855	950
50	20	Extend = 1963	175	350	525	700	875	1050	1225	1400	1575	1750
		Retract = 1649	148	296	444	592	740	888	1036	1184	1332	1480
63	20	Extend = 3117	280	560	840	1120	1400	1680	1960	2240	2520	2800
		Retract = 2803	250	500	750	1000	1250	1500	1750	2000	2250	2500
80	25	Extend = 5027	450	900	1350	1800	2250	2700	3150	3600	4050	4500
		Retract = 4536	405	810	1215	1620	2025	2430	2835	3240	3645	4050
100	25	Extend = 7854	700	1400	2100	2800	3500	4200	4900	5650	6360	7000
		Retract = 7363	660	1320	1980	2640	3300	3960	4620	5280	5940	6600
125	32	Extend = 12270	1104	2208	3312	4416	5520	6624	7728	8832	9936	11040
		Retract = 11468	1032	2064	3096	4128	5160	6192	7224	8256	9288	10320
160	40	Extend = 20096	1774	3548	5322	7097	8871	10645	12419	14194	15968	17742
		Retract = 18840	1663	3326	4990	6653	8316	9980	11643	13307	14970	16633
200	40	Extend = 31440	2772	5544	8316	11089	13861	16633	19406	22178	24950	27723
		Retract = 30144	2661	5322	7984	10645	13307	15968	18629	21291	23952	26614
250	50	Extend = 48750	4331	8663	12995	17326	21658	25990	30322	34653	38985	43317
		Retract = 46800	4158	8316	12475	16663	20792	24950	29109	33267	37426	41584
320	63	Extend = 78872	7097	14194	21291	28388	35485	42582	49679	56776	63873	70971
		Retract = 76776	6822	13644	20466	27288	34110	40932	47754	54576	61398	68220

Spring Loads

Cylinder	Spring load	Stroke (mm)				
Ø		25	50	75	80	100
				Output force N		
32	Load of spring at rest	50	41	33	31.5	24.5
	Load of compressed spring	58	58	58	58	58
40	Load of spring at rest	52	43	34	32	25
	Load of compressed spring	61	61	61	61	61
50	Load of spring at rest	92	77	64	60	49
	Load of compressed spring	110	110	110	110	110
63	Load of spring at rest	92	77	64	60	49
	Load of compressed spring	110	110	110	110	110
80	Load of spring at rest	117	98	79	75	59
	Load of compressed spring	138	138	138	138	138
100	Load of spring at rest	117	98	79	75	59
	Load of compressed spring	138	138	138	138	138

Air Consumption

Cylinder	Piston Rod	Piston Area	Operating pressure									
Ø	Ø	mm²	bar									
			1	2	3	4	5	6	7	8	9	10
			Air consumption for each 10 mm of stroke Nl									
32	12	Extend = 804	0.016	0.024	0.032	0.040	0.048	0.056	0.064	0.072	0.080	0.088
		Retract = 691	0.014	0.021	0.028	0.035	0.041	0.048	0.055	0.062	0.069	0.076
40	16	Extend = 1257	0.025	0.038	0.050	0.063	0.075	0.088	0.101	0.113	0.126	0.138
		Retract = 1056	0.021	0.032	0.042	0.053	0.063	0.074	0.084	0.095	0.106	0.116
50	20	Extend = 1963	0.039	0.059	0.079	0.098	0.118	0.137	0.157	0.177	0.196	0.216
		Retract = 1649	0.033	0.049	0.066	0.082	0.099	0.115	0.132	0.148	0.165	0.181
63	20	Extend = 3117	0.062	0.094	0.125	0.156	0.187	0.218	0.249	0.281	0.312	0.343
		Retract = 2803	0.056	0.084	0.112	0.140	0.168	0.196	0.224	0.252	0.280	0.308
80	25	Extend = 5027	0.101	0.151	0.201	0.251	0.302	0.352	0.402	0.452	0.503	0.553
		Retract = 4536	0.091	0.136	0.181	0.227	0.272	0.318	0.363	0.408	0.454	0.499
100	25	Extend = 7854	0.157	0.236	0.314	0.393	0.471	0.550	0.628	0.707	0.785	0.864
		Retract = 7363	0.147	0.221	0.295	0.368	0.442	0.515	0.589	0.663	0.736	0.810
125	32	Extend = 12270	0.245	0.368	0.491	0.614	0.736	0.859	0.982	1.104	1.227	1.350
		Retract = 11468	0.229	0.344	0.459	0.573	0.688	0.803	0.917	1.032	1.147	1.261
160	40	Extend = 20096	0.402	0.603	0.804	1.005	1.206	1.407	1.608	1.809	2.010	2.211
		Retract = 18840	0.377	0.565	0.754	0.942	1.130	1.319	1.507	1.1696	1.884	2.072
200	40	Extend = 31440	0.628	0.942	1.256	1.570	1.884	2.198	2.512	2.826	3.140	3.454
		Retract = 30144	0.603	0.904	1.206	1.507	1.809	2.110	2.412	2.713	3.014	3.316
250	50	Extend = 48750	0.981	1.472	1.963	2.453	2.948	3.434	3.925	4.415	4.906	5.400
		Retract = 46800	0.942	1.413	1.884	2.355	2.826	3.297	3.768	4.239	4.710	5.181
320	63	Extend = 78872	1.610	2.411	3.215	4.020	4.820	5.626	6.430	7.234	8.038	8.843
		Retract = 76776	1.545	2.320	3.100	3.863	4.630	5.408	6.181	6.954	7.726	8.450