AIGNEP

Actuator Series

Cartridge Cylinders
Ø 6-16 mm



CA - CAF Series
Pg. 20.3

Mini Cylinders ISO 6432
Ø 8-25 mm



Mini Series
Pg. 20.5

Mini Stainless Steel Cylinders
ISO 6432 Ø 16-25 mm



Mini Stainless Steel Series
Pg. 20.13

Limited Space
Ø 32-63 mm



A95 Series
Pg. 20.16

Compact Cylinders
Ø 12-100 mm



Q Series
Pg. 20.23

ISO 15552 Cylinders
Ø 32-125 mm



L Series
Pg. 20.36

ISO 6431 Cylinders
Ø 160-320 mm



E Series
Pg. 20.45

Stainless Steel ISO 15552 Cylinders
Ø 32-125 mm



V Series
Pg. 20.47

Twin Rod Cylinders
Ø 32-100 mm



NHA Series
Pg. 20.50

Compact Cylinders ISO 21287
Ø 20-100 mm



W Series
Pg. 20.54

Cylinder Accessories
ISO 6431 - ISO 15552 - ISO 21287



Accessories
Pg. 20.62

Magnetic Position Sensing Switches



Sensors
Pg. 20.72

Rodless Actuator Series

Rodless Cylinders Standard Version



S1 Series
Pg. 20.82

Rodless Cylinder with Integrated Guides in Technopolymer



S5 Series
Pg. 20.91

Click here to view the Actuator Series on our Website

AIGNEP

AIGNEP

Rodless Cylinders

PNEUMATIC RODLESS CYLINDERS



SERIES S5 - RODLESS CYLINDERS WITH INTEGRATED SLIDE

TECHNICAL CHARACTERISTICS

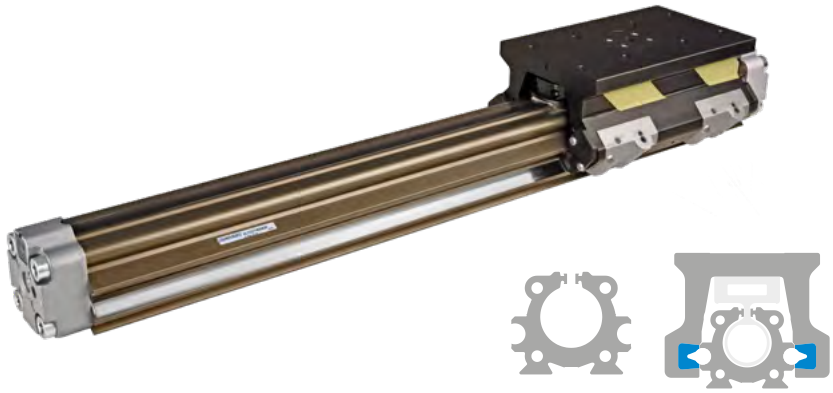

Pressure
43 ÷ 145 psi (3 ÷ 10 bar)

Temperatures
-4 °F ~ 176 °F
-20 °C ~ 80 °C

Fluid
filtered air, with or without lubrication

Bore
25 - 32 - 40 - 50 mm

Standard strokes
Strokes up to 6000 mm

Operation
Flexible guide system with a sliding carriage running on plastic guide shoes and steel rods.
Speed: 0.2 to 1.5 m/s.
Parking lock available.

Materials and Components
- Die-cast aluminum end caps
- Anodized aluminum barrel
- Aluminum piston
- Acetal resin guide shoe
- NBR double-lip piston seal
- NBR cushioning pads on both ends
- Aluminum profile

Series	Type	Left-hand side power supply	Right-hand side power supply	Bore (mm)	Stroke (mm)
U S 5	0	1	1	2 5	1 0 0 0
US5 Rodless Cylinders with integrated guides - Technopolymer sliding guide	**0** Standard carriage (except for Ø 40-50) **2** Medium carriage **3** Long carriage	**0** No supply port (both chambers are supplied from the right end-cap) **1** Side supply port **2** Bottom supply port **3** Rear supply port	**1** Side supply port **2** Bottom supply port **3** Rear supply port **4** Rear supply ports for both chambers on the right end-cap	**25** = Ø25 **32** = Ø32 **40** = Ø40 **50** = Ø50	Up to **6000**

STROKE TOLERANCES

Ø	mm
25	+2,5 -0
32	+3,2 -0
40	+3,2 -0
50	+3,2 -0

Ø	CYLINDER MASS STANDARD CARRIAGE Cylinder - stroke 0 lbs (g)	CYLINDER MASS MEDIUM CARRIAGE Cylinder - stroke 0 lbs (g)	CYLINDER MASS LONG CARRIAGE Cylinder - stroke 0 lbs (g)	Increase for 100 mm stroke lbs (g)
25	3.58 (1625)	4.25 (1930)	0.58 (264)	0.8 (365)
32	6.12 (2775)	7.2 (3265)	1.03 (465)	1.09 (495)
40	-	13.44 (6095)	1.9 (860)	2.03 (920)
50	-	22.11 (10030)	30.95 (14040)	2.82 (1280)

Theoretical forces (N) at different working pressures (bar) Static load value (N) and torque (Nm)

Please note that in dynamic conditions, the load must be reduced due to effects associated with the speed.. A moment is the product of the load (Newton) and the arm (meters), i.e the distance between the center of gravity of the load and the longitudinal axis of the piston.

Force 6 bar	Load P1	Load P2	Load P3	Bending moment M1	Torque M2	Bending moment M3

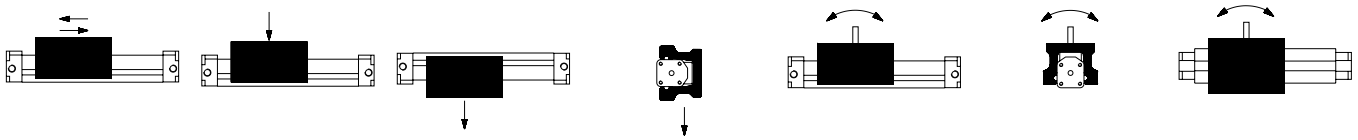

Ø	Forc e F (N)	Load P1 (N)	Load P2 (N)	Load P3 (N)	Standard carriage M1 (Nm)	Standard carriage M2 (Nm)	Standard carriage M3 (Nm)	Medium carriage M1 (Nm)	Medium carriage M2 (Nm)	Medium carriage M3 (Nm)	Long carriage M1 (Nm)	Long carriage M2 (Nm)	Long carriage M3 (Nm)
25	250		400		13	8	16	20	10	25	40	15	50
32	420		400		20	9	27	30	12	40	55	18	75
40	640		600		-	-	-	60	30	80	110	45	150
50	1050		800		-	-	-	85	50	110	150	75	210

FIXING ELEMENTS AND ACCESSORIES

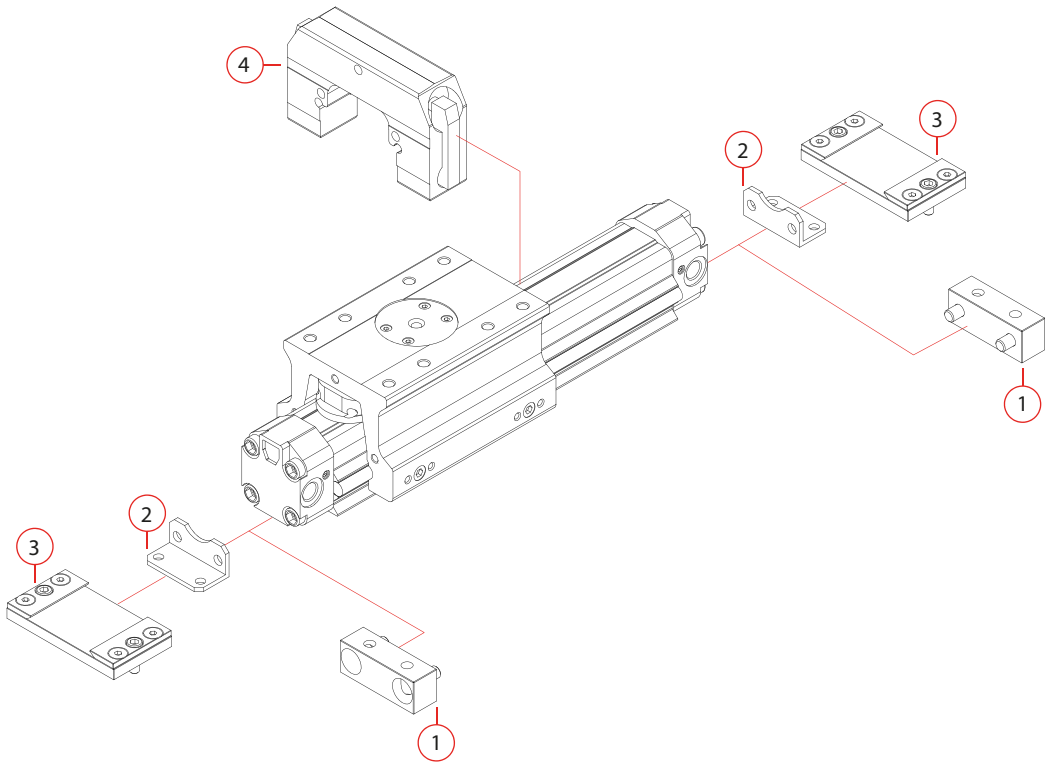

1	Angle bracket Ø25-32 **USF 13**
2	Bracket Ø40-50 **USF 13**
3	Fixing plate **USF 12**
4	L6 locking unit **UL6 S5**

US5

RODLESS CYLINDERS WITH INTEGRATED GUIDES Ø 25 - 32

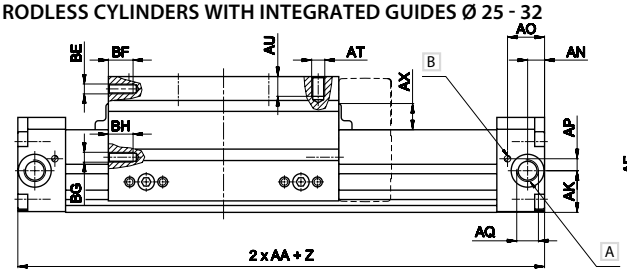

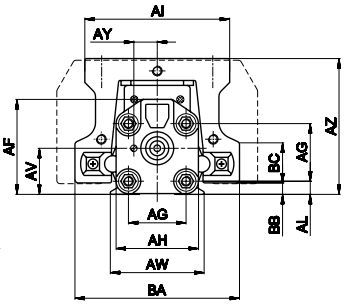



A Pneumatic cushioning adjusting screw

B Side supply port

Z = Stroke
For Ø 40 - 50 the standard carriage is not available

STANDARD CARRIAGE

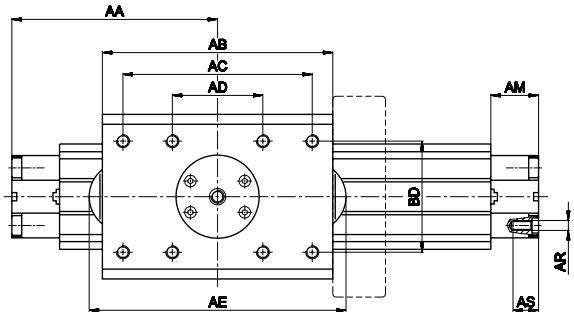

MEDIUM CARRIAGE

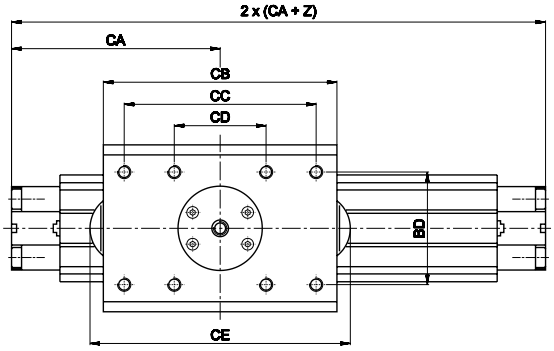



Z = Stroke

LONG CARRIAGE

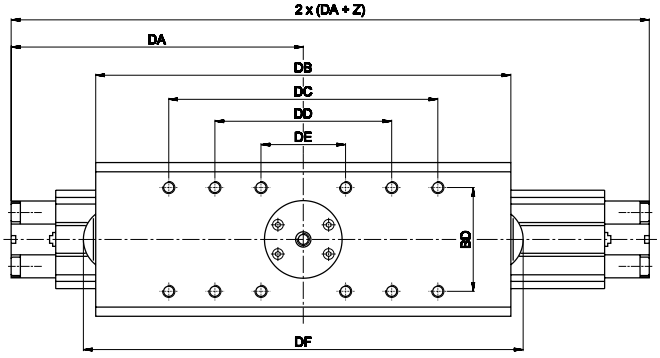



Z = Stroke

Ø	AA	AB	AC	AD	AE	AF	AG	AH	AI	AK	AL	AM	AN	AO	AP
25	100	106	90	50	130	48,3	28	40,5	70	20,2	7	24	7,4	18,2	5,7
32	125	140	115	55	156	57	35	50	88	25,3	8	29	10,3	22,5	7,3

Ø	AQ	AR	AS	AT	AU	AV	AW	AX	AY	AZ	BA	BB	BC	BD	BE
25	G1/8	M5	12	M6	10	22,8	42,8	16	12,2	71,8	85	5,7	24	50	15
32	G1/4	M6	15,5	M6	12	28	57	16	14,2	82,5	100	7	24,5	67,5	15

Ø	BF	BG	BH	CA	CB	CC	CD	CE	DA	DB	DC	DD	DE	DF
25	M6	M6	15	114,5	136	90	50	160	147,5	201	130	90	50	225
32	M6	M6	15	142,5	175	115	55	191	190	270	175	115	55	286

US5

RODLESS CYLINDERS WITH INTEGRATED GUIDES Ø 40 - 50

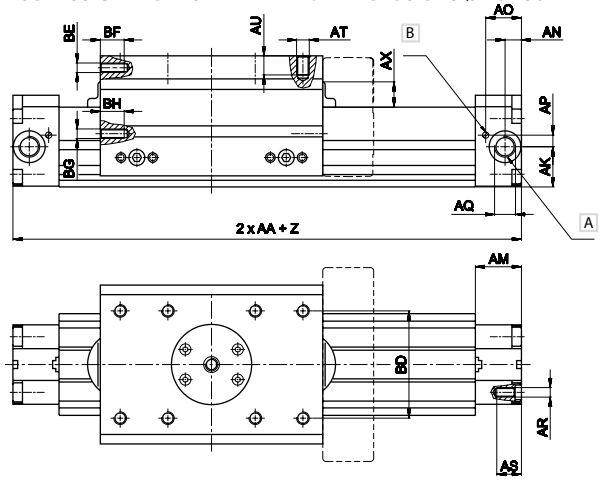

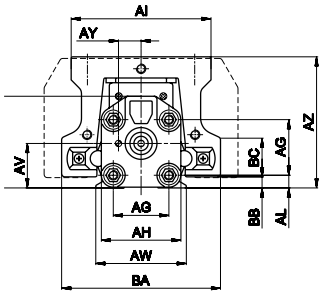



A Pneumatic cushioning adjusting screw

B Side supply port

Z = Stroke

MEDIUM CARRIAGE

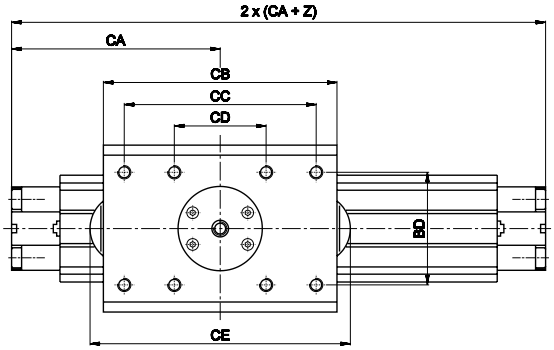



Z = Stroke

LONG CARRIAGE

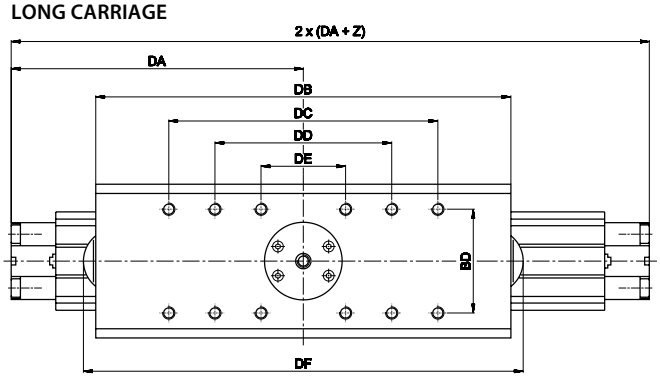



Z = Stroke

Ø	AG	AH	AI	AK	AL	AM	AN	AO	AP	AQ	AR	AS	AT
40	44	64	90	33,8	11,8	33	12,5	26,5	8,7	G3/8	M8	20	M8
50	55	80	100	41,4	14,7	33	14,2	25,7	11,8	G3/8	M10	20	M8

Ø	AU	AV	AW	AX	AY	AZ	BA	BB	BC	BD	BE	BF	BG
40	14	37	67	19,5	16,5	106,6	135	7	39	65	15	M6	M6
50	16	47,7	86	20,5	19,1	123,7	149	7,2	41	76,5	16	M8	M6

Ø	BH	BD	CA	CB	CC	CD	CE	DA	DB	DC	DD	DE	DF
40	15	65	169	205	180	75	215	225	317	280	185	75	327
50	15	76,5	205	258	190	80	271	277	398	320	200	80	411

LOCKING UNITS FOR RODLESS CYLINDERS

TECHNICAL CHARACTERISTICS

Our locking Units for rodless cylinders perform the function of keeping the carriage in any intended point of its stroke and allow high locking accuracy.
They can be mounted on both sides of the carriage and the mechanical braking force can be further increased by means of an additional pneumatic override.



Pressure
65.3 ÷ 145 psi (4.5 ÷ 10 bar)

Temperatures
-4 °F ~ 176 °F
-20 °C ~ 80 °C

Fluid
filtered air, with or without lubrication

Bore
25 - 32 - 40 - 50 mm

Materials and Components
- Body in die-cast aluminum
- Seals in NBR
- Internal parts in brass/aluminum

Series	Bore (mm)
U L 6 S 5	0 2 5
UL6S5 = Locking units for S5 series rodless cylinders	25 = Ø25 32 = Ø32 40 = Ø40 50 = Ø50

Characteristics
- Min release pressure 65.3 psi (4.5 bar)
- Able to keep the carriage in position in both directions
- Easy installation, possible by both the carriage sides indifferently.
- Permanent manual release by tightening two M5 screws.
- Locking by means of mechanic springs acting over the carriage in event of lack of air pressure (A).
- To increase the locking force, this unit is ready for an additional pneumatic override (CH).

US5 SERIES WITH L6 LOCKING UNIT

MANUAL RELEASE M5X12



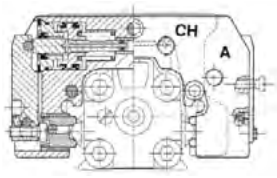

STATIC LOCKING FORCE

Ø	Force N	A = CH
25	810	M5
32	1185	G1/8
40	825	G1/8
50	1235	G1/8

MASS

Code	Ø	Locking unit g
UL6 S5025	25	350
UL6 S5032	32	460
UL6 S5040	40	820
UL6 S5050	50	1450

A = Pneumatic release
CH = Additional pneumatic override

SCHEME OF WORKING PRINCIPLE

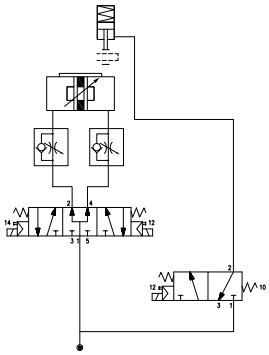

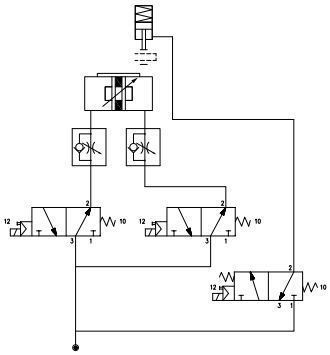

US5



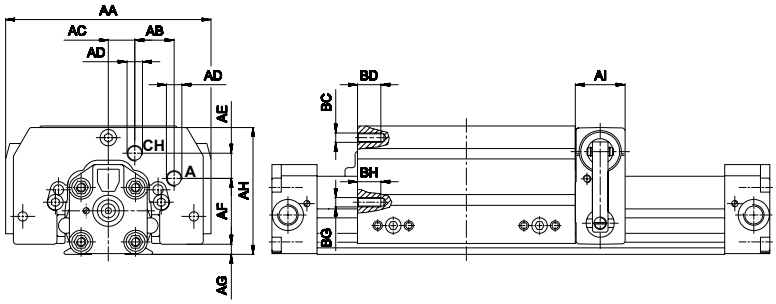

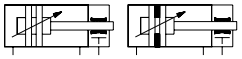

A = Pneumatic release
CH = Additional pneumatic override

FIXING Ø 25 - 32 - 40

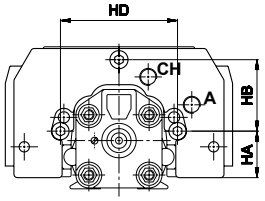

A = Pneumatic release
CH = Additional pneumatic override

FIXING Ø 50

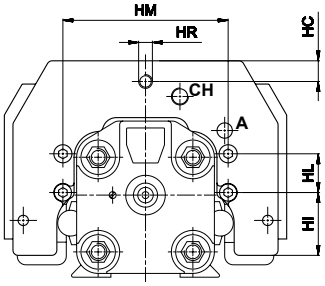

A = Pneumatic release
CH = Additional pneumatic override

Ø	AA	AB	AC	AD	AE	AF	AG	AH	AI	BC	BD	BG	BH	HA	HB	HC	HD	HI	HL	HM	HR
25	120	24,5	12,5	M5	16,5	34,5	5	71,5	32	M6	15	M6	15	24,7	34,8	-	59,5	-	-	-	-
32	132	25,3	17	G1/8	16,2	42,3	6,5	81,5	32	M6	15	M6	15	27	41,5	-	68	-	-	-	-
40	150	26	17	G1/8	18,2	58,3	10	106	40	M6	15	M6	15	45,3	43,8	-	81,5	-	-	-	-
50	164	26	20	G1/8	19,8	72,5	12,7	125,7	51	M8	16	M6	15	-	-	12	-	36,5	22,5	96	M8x14

FIXING ELEMENTS AND ACCESSORIES

USF 12

FIXING PLATE

Material: Zinc-plated steel

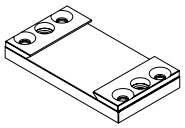

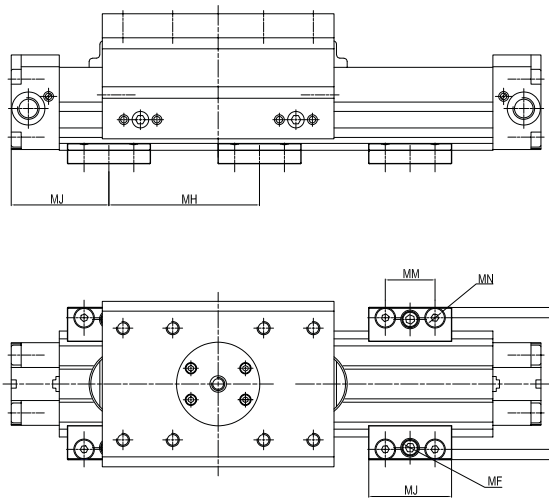

	Ø	MA	MB	MC	MD	ME	MF	MG	MH (a)	MI	MJ	ML	MM	MN	Mass g
USF 12025	25	78,5	63,5	50	79,8	12	M8	11	500	6,5	55	65,5	30	M6	310
USF 12032	32	92	77,5	50	90,5	12	M8	11	600	8,5	60	79,5	30	M6	340
USF 12040	40	117	96	60	116,6	15	M10	14	700	8	70	96	37,5	M8	660
USF 12050	50	136	115	60	133,7	15	M10	14	800	8	70	115	37,5	M8	700

(a) = Max allowable dimension to limit the bending of cylinder according to the stroke and to provide a correct fixing

USF 13

ANGLE BRACKET

Material: Zinc-plated steel

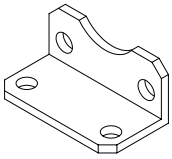

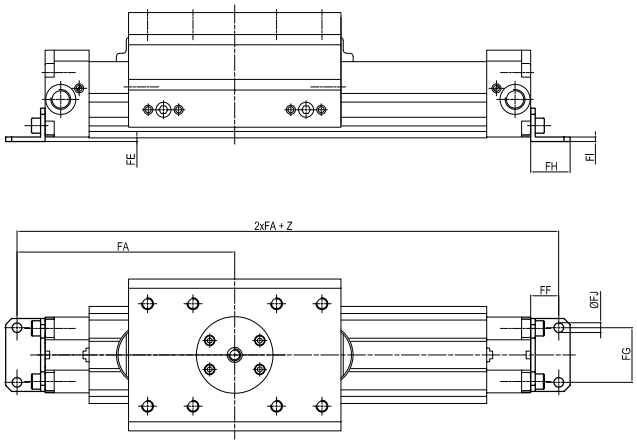

	Ø	FA	FB	FC	FD	FE	FF	FG	FH	FI	FJ Ø	Mass g
USF 13025	25	116	58,1	48,8	40	0,5	16	27	22	2,5	5,5	34
USF 13032	32	143,5	68,7	59,2	48	2,5	18,5	36	26	3	6,5	53

USF 13

BRACKET

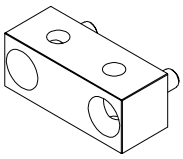

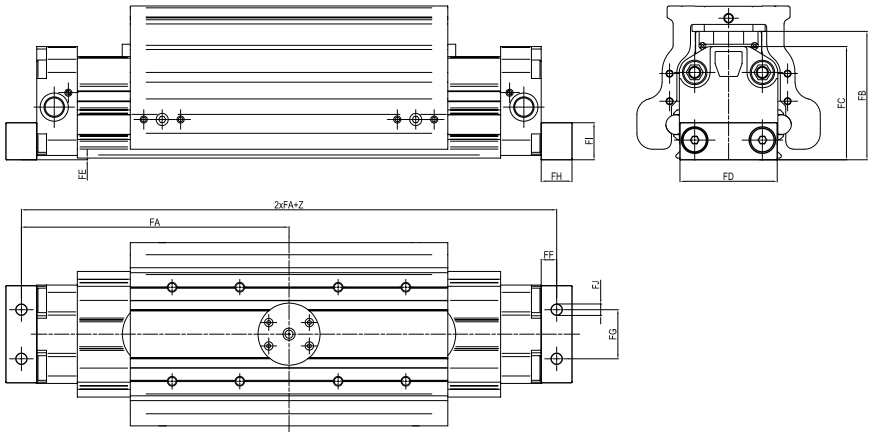

Material: Anodized aluminum

	Ø	FA	FB	FC	FD	FE	FF	FG	FH	FI	FJ Ø	Mass g
USF 13040	40	162,5	86,5	74,9	63	0,7	12,5	30	25	25	9	116
USF 13050	50	187,5	104,3	92,4	79	1,3	12,5	40	25	30	9,3	170

NOTES