AIGNEP

Actuator Series

Cartridge Cylinders
Ø 6-16 mm



CA - CAF Series
Pg. 20.3

Mini Cylinders ISO 6432
Ø 8-25 mm



Mini Series
Pg. 20.5

Mini Stainless Steel Cylinders
ISO 6432 Ø 16-25 mm



Mini Stainless Steel Series
Pg. 20.13

Limited Space
Ø 32-63 mm



A95 Series
Pg. 20.16

Compact Cylinders
Ø 12-100 mm



Q Series
Pg. 20.23

ISO 15552 Cylinders
Ø 32-125 mm



L Series
Pg. 20.36

ISO 6431 Cylinders
Ø 160-320 mm



E Series
Pg. 20.45

Stainless Steel ISO 15552 Cylinders
Ø 32-125 mm



V Series
Pg. 20.47

Twin Rod Cylinders
Ø 32-100 mm



NHA Series
Pg. 20.50

Compact Cylinders ISO 21287
Ø 20-100 mm



W Series
Pg. 20.54

Cylinder Accessories
ISO 6431 - ISO 15552 - ISO 21287



Accessories
Pg. 20.62

Magnetic Position Sensing Switches



Sensors
Pg. 20.72

Rodless Actuator Series

Rodless Cylinders Standard Version



S1 Series
Pg. 20.82

Rodless Cylinder with Integrated Guides in Technopolymer



S5 Series
Pg. 20.91

Click here to view the Actuator Series on our Website

AIGNEP

AIGNEP

Rodless Cylinders

PNEUMATIC RODLESS CYLINDERS



SERIES S1 - RODLESS CYLINDERS STANDARD VERSION

TECHNICAL CHARACTERISTICS



Reference standard

II 2G Ex h IIC T5 Gb

II 2D Ex h IIIC T100°C Db

Pressure

43 ÷ 145 psi (3 ÷ 10 bar)

Temperatures

-4 °F ~ 176 °F
-20 °C ~ 80 °C

Fluid

filtered air, with or without lubrication

Recommended sensors

DH- DHF
DF only for Ø 16

Bore

16 - 25 - 32 - 40 - 50 mm

Standard strokes

Strokes up to 6000 mm

Operation

Double-acting, magnetically cushioned rodless cylinder.
Aluminum profile, Ø16–50 mm, high-speed operation up to 3 m/s.
Customizable configurations with carriage and integrated guide available on request.

Materials and Components

- End caps: zinc alloy (Ø16), die-cast aluminum (Ø25–50)
- Barrel: anodized aluminum
- Piston: aluminum
- Guide carriage: acetal resin
- Double-lip NBR piston seal
- NBR cushioning pads on both ends
- Neodymium magnet

Series	Type	Left-hand side power supply	Right-hand side power supply	Bore (mm)	Stroke (mm)	Magnetic variant
U S 1	0	1	1	2 5	1 0 0 0	M
US1 Rodless Cylinders Standard version standard Ø 16÷50 mm	**0** Standard carriage **2** Medium carriage (except for Ø16) **3** Long carriage (except for Ø16)	**0** No supply port (both chambers are supplied from the right end-cap) **1** Side supply port (except for Ø16) **2** Bottom supply port (except for Ø16) **3** Rear supply port (except for Ø16)	**1** Side supply port (except for Ø16) **2** Bottom supply port (except for Ø16) **3** Bottom supply port (except for Ø16) **4** Rear supply ports for both chambers on the right end-cap **5** Side supply ports for both chambers on the right end-cap (only for Ø16)	**16** = Ø16 **25** = Ø25 **32** = Ø32 **40** = Ø40 **50** = Ø50	Up to **5000** (Ø 16) Up to **6000** (Ø 25÷50)	**M** Standard magnetic version

END-CAPS

End-caps in die-cast light alloy with various supply port options. The unique method of stripseal attachment permits easy assembly and disassembly, without the need for tools or the necessity for continous adjustment.

Ø 16 MM

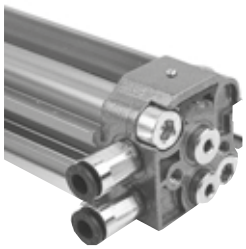

Double side supply ports

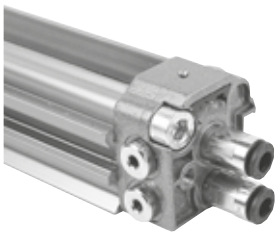

Double rear supply ports

Ø 25 ÷ 50 MM

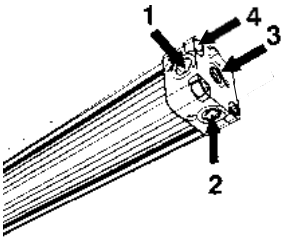

0 = no supply port (on left end-cap only when both chambers are supplied from the right end-cap)
1= side
2= bottom
3= rear
4= both chambers supplied from one end-cap

SLIDEWAY SEALING

The pneumatic sealing is achieved through an axial elastomer stripseal reinforced with Kevlar. This system guarantees dimensional stability even with high speeds. The external protection seal consists of a thermoplastic stripseal reinforced with Kevlar.

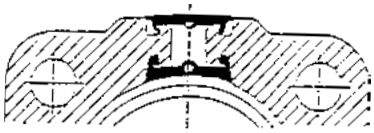

PISTON-CARRIAGE ASSEMBLY
In extruded aluminum alloy with thermoplastic plane guide bearings. The piston is fi tted with double lip seals which automatically self-compensate against wear. Pistons with permanent magnets are available upon request (S1 series only).

BARREL
In extruded aluminum alloy with internal and external anodization.

CUSHIONINGS
Pneumatic adjustable cushioning with two regulation screws in each end-cap allow an improved regulation of piston deceleration.

MECHANICAL SHOCK ABSORBERS
Mechanical rubber shock absorbers avoid mechanical stress and reduce machinery noise (below 50 dB).

STROKE TOLERANCES

Ø	mm
16	+2,5 -0
25	+2,5 -0
32	+3,2 -0
40	+3,2 -0
50	+3,2 -0

	CYLINDER MASS STANDARD CARRIAGE	CYLINDER MASS MEDIUM CARRIAGE	CYLINDER MASS LONG CARRIAGE	
Ø	**Cylinder - stroke 0 lbs (g)**	**Cylinder - stroke 0 lbs (g)**	**Cylinder - stroke 0 lbs (g)**	**Increase for 100 mm stroke lbs (g)**
16	0.68 (310)	-	-	0.23 (104)
25	1.65 (750)	1.85 (840)	2.31 (1050)	0.46 (210)
32	2.89 (1310)	3.26 (1480)	4.25 (1930)	0.72 (325)
40	5.73 (2600)	6.42 (2910)	8.38 (3800)	1.22 (555)
50	10.55 (4785)	12.24 (5550)	16.16 (7330)	2.11 (955)

Theoretical forces (N) at different working pressures (bar) Static load value (N) and torque (Nm)

Please note that in dynamic conditions, the load must be reduced due to effects associated with the speed.
A moment is the product of the load (Newton) and the arm (meters), i.e the distance between the center of gravity of the load and the longitudinal axis of the piston.

Force	Load			Bending moment	Torque	Bending moment
6 bar	P1	P2	P3	M1	M2	M3

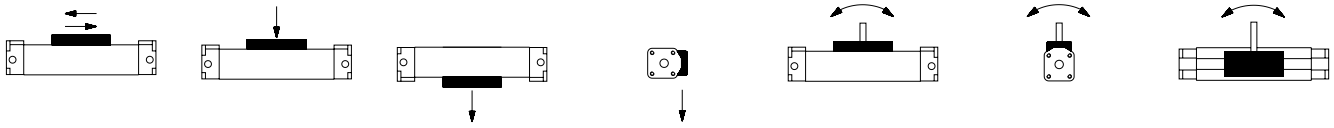

Ø	Forc e	Load			Standard carriage			Medium carriage			Long carriage		
	F (N)	P1 (N)	P2 (N)	P3 (N)	M1 (Nm)	M2(a) (Nm)	M3 (Nm)	M1 (Nm)	M2(a) (Nm)	M3 (Nm)	M1 (Nm)	M2 (Nm)	M3 (Nm)
16	125	100	100	25	5	0,2	0,8	-	-	-	-	-	-
25	250	200	200	50	8	2	3	14	3	5	15	6	9
32	420	250	250	65	9	3	4	15	4	7	28	8	12
40	640	350	350	90	11	9	14	16	14	20	31	27	39
50	1050	500	500	125	19	13	19	29	20	30	52	36	53

(a) = Using the cylinder with heavy stress is not recommended

FIXING ELEMENTS AND ACCESSORIES

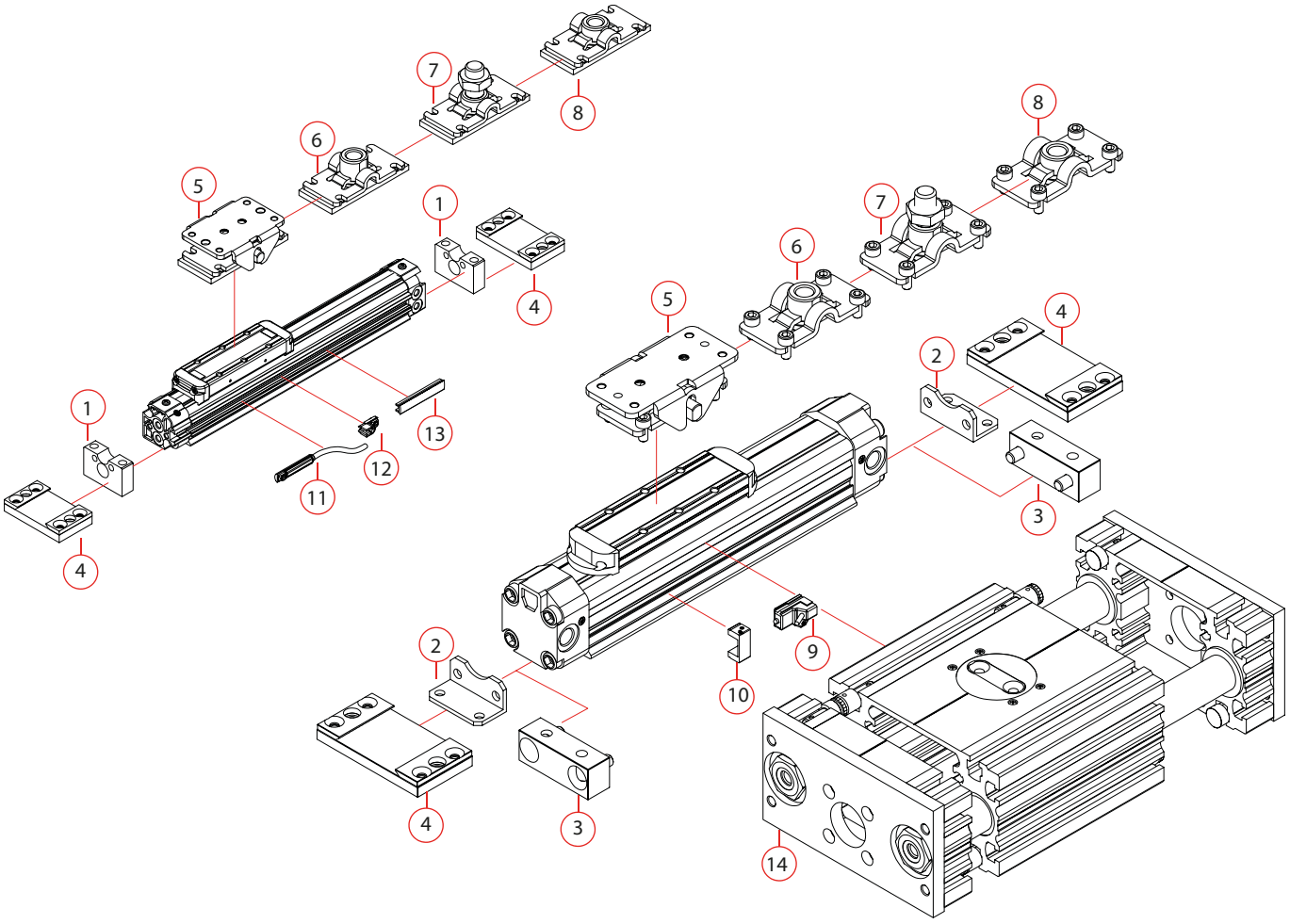

1	Bracket Ø16 **USF13**
2	Angle bracket Ø25-32 **USF13**
3	Bracket Ø40-50 **USF13**
4	Fixing plate **USF12**
5	Oscillating bracket **USF24**
6	Female threaded connection **USF26**
7	Male threaded pin **USF27**
8	Female connection without thread **USF28**
9	sensor **UDH**
10	sensor fixing plate **UDHS**
11	**UDF** sensor (Ø16 only)
12	Cable clamping for DF sensor (Ø16 only) **UDF001**
13	DHF covering strip (Ø16 only) **UDHF0020100**
14	Slide unit **UJ30A**

US1

RODLESS CYLINDER WITH STANDARD CARRIAGE - 6 FIXING HOLES

Ø 16 MM

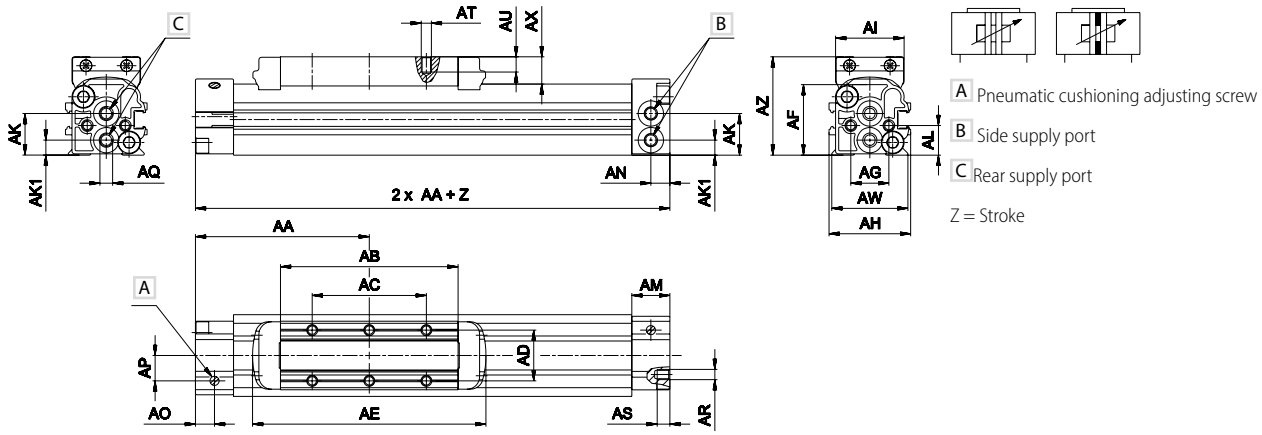

Ø 25÷50 MM

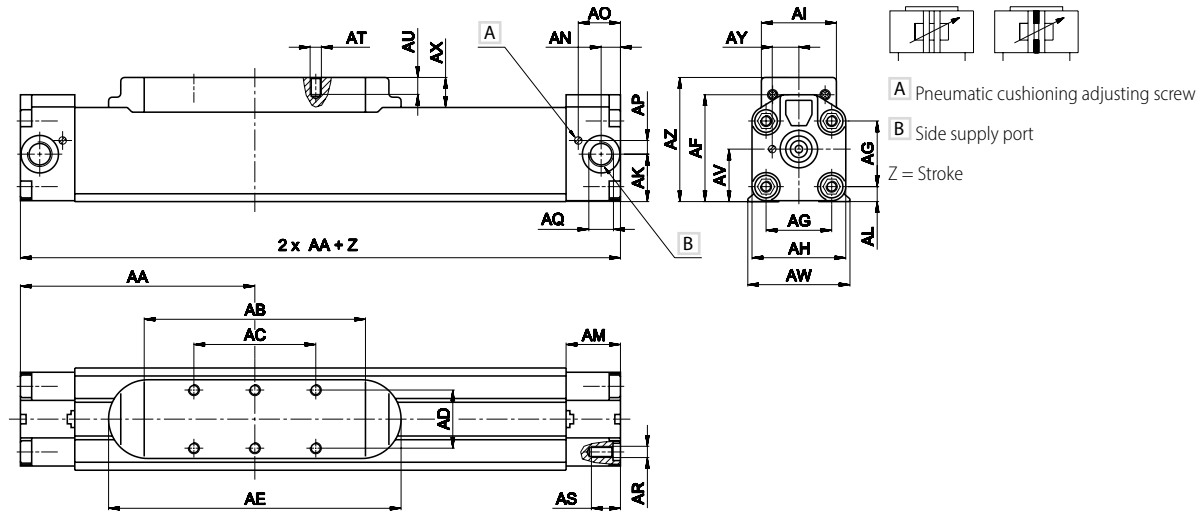

Ø	AN	AO	AP	AQ	AR	AS	AT	AU	AV	AW	AX	AY	AZ
16	7,5	7,5	10	M5	M4	5	M4	6	-	30	11	-	39
25	7,4	18,2	5,7	G1/8	M5	12	M5	9	22,8	42,8	16	12,2	57,6
32	10,3	22,5	7,3	G1/4	M6	15,5	M6	9	28	54,5	16	14,2	66,2
40	12,5	26,5	8,7	G3/8	M8	20	M6	11	37	67	19,5	16,5	85,8
50	14,2	25,7	11,8	G3/8	M10	20	M8	12	47,7	86	20,5	19,1	103

Ø	AA	AB	AC	AD	AE	AF	AG	AH	AI	AK	AK	AL	AM
16	68,5	70	45	20	92	30	18	32	27	16,5	6	11,5	15
25	100	95	50	24	130	48,3	28	40,5	33	20,2	-	7	24
32	125	118	65	31	156	57	35	50	40	25,3	-	8	29
40	150	134	65	31	177	74	44	64	44	33,8	-	11,8	33
50	175	164	105	39	211	90,7	55	80	54	41,4	-	14,7	33

US1

RODLESS CYLINDER WITH MEDIUM CARRIAGE - 6 FIXING HOLES Ø 25 ÷ 50 MM

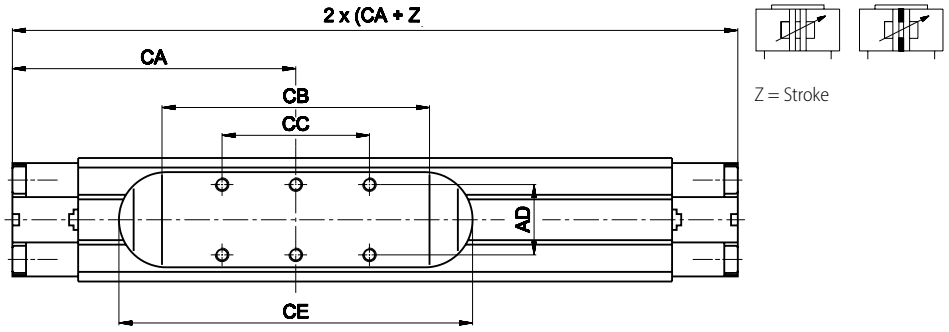

US1

RODLESS CYLINDER WITH LONG CARRIAGE - 10 FIXING HOLES Ø 25 ÷ 50 MM

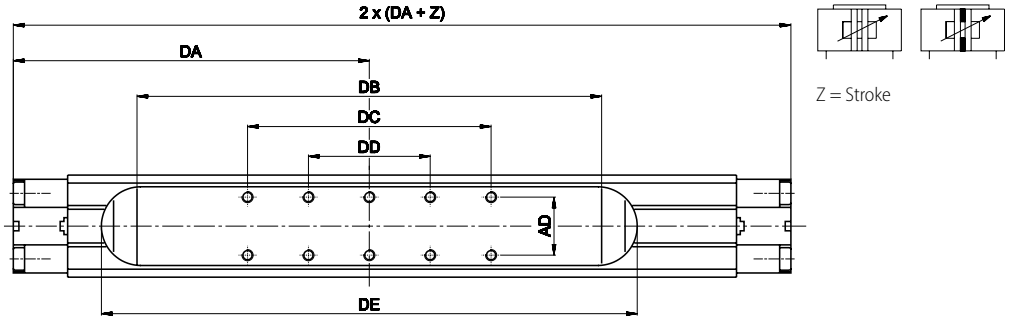

Ø	AD	CA	CB	CC	CE	DA	DB	DC	DD	DE
25	24	114,5	125	50	160	147,5	190	100	50	225
32	31	142,5	153	65	191	190	248	130	65	286
40	31	169	172	65	215	225	284	130	65	327
50	39	205	224	105	271	277	364	315	105	411

FIXING ELEMENTS AND ACCESSORIES

USF 12

FIXING PLATE

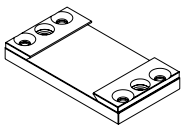

Ø 16 mm

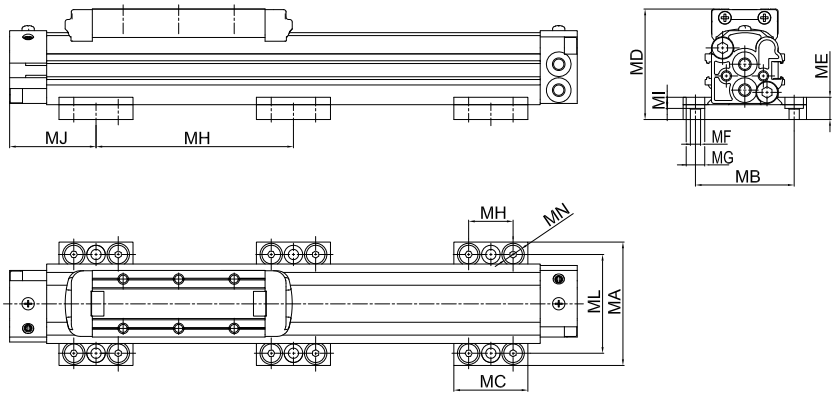

Ø 25÷50 mm

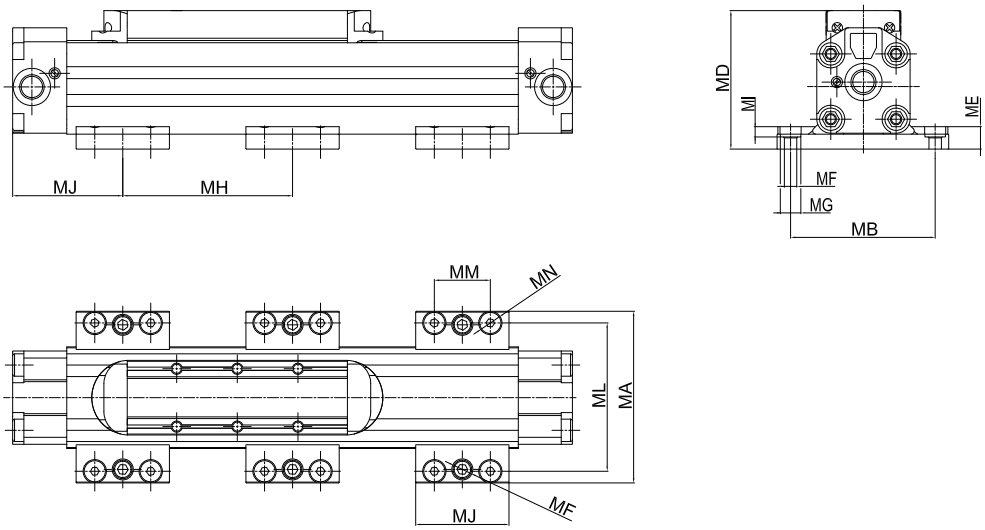

Material: zinc-plated steel

	Ø	MA	MB	MC	MD	ME	MF	MG	MH (a)	MI	MJ	ML	MM	MN	Mass g
USF 12016	16	50	40	30	44,8	9	M5	8	400	4,5	35	40	-	M6	83
USF 12025	25	78,5	63,5	50	65,6	12	M8	11	500	6,5	55	65,5	30	M6	310
USF 12032	32	92	77,5	50	74,2	12	M8	11	600	8,5	60	79,5	30	M6	340
USF 12040	40	117	96	60	95,8	15	M10	14	700	8	70	96	37,5	M8	660
USF 12050	50	136	115	60	113	15	M10	14	800	8	70	115	37,5	M8	700

(a) = Max allowable dimension to limit the bending of the cylinder according to the stroke and to provide a correct fixing

USF 13

BRACKET

Material: Anodized aluminum

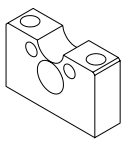

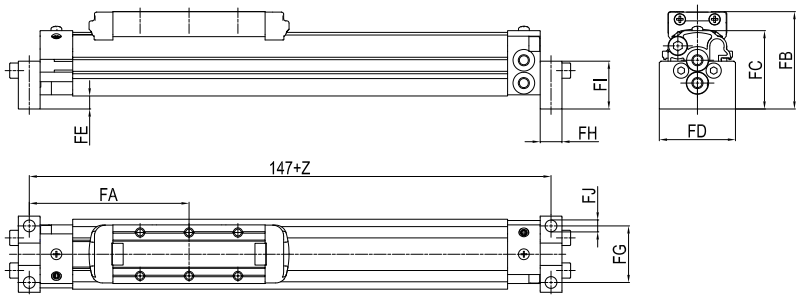

	Ø	FA	FB	FC	FD	FE	FG	FH	FI	FJ Ø	Mass g
USF 13016	16	73,5	45	36	35	6	26	10	22	5,5	15

USF 13

ANGLE BRACKET

Material: Zinc-plated steel

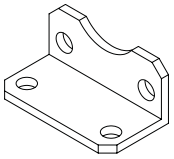

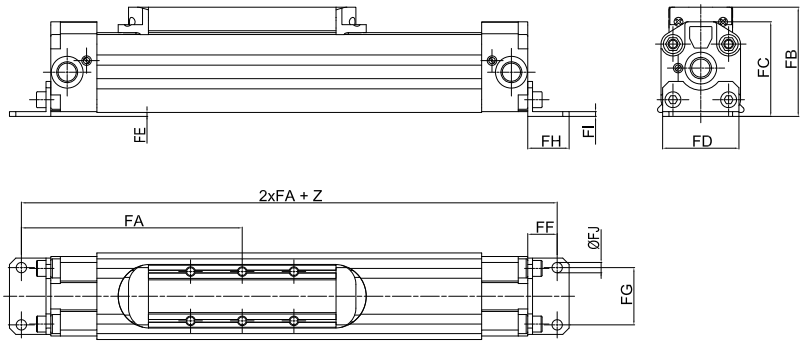

	Ø	FA	FB	FC	FD	FE	FF	FG	FH	FI	FJ Ø	Mass g
USF 13025	25	116	58,1	48,8	40	0,5	16	27	22	2,5	5,5	34
USF 13032	32	143,5	68,7	59,2	48	2,5	18,5	36	26	3	6,5	53

USF 13

BRACKET

Material: Anodized aluminum

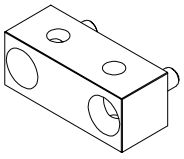

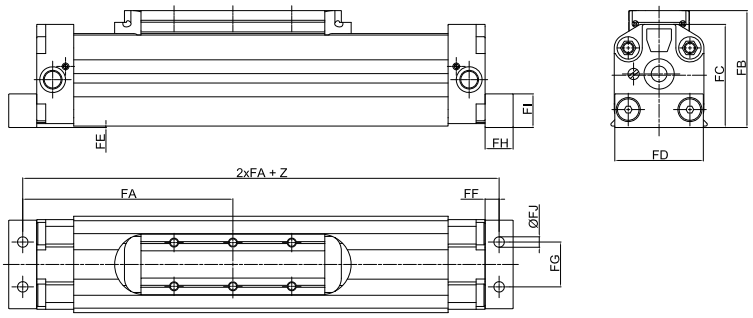

	Ø	FA	FB	FC	FD	FE	FF	FG	FH	FI	FJ Ø	Mass g
USF 13040	40	162,5	86,5	74,9	63	0,7	12,5	30	25	25	9	116
USF 13050	50	187,5	104,3	92,4	79	1,3	12,5	40	25	30	9,3	170

USF 24

OSCILLATING BRACKET

Material: Zinc-plated steel

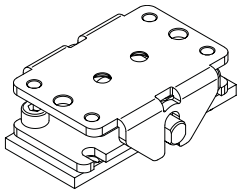

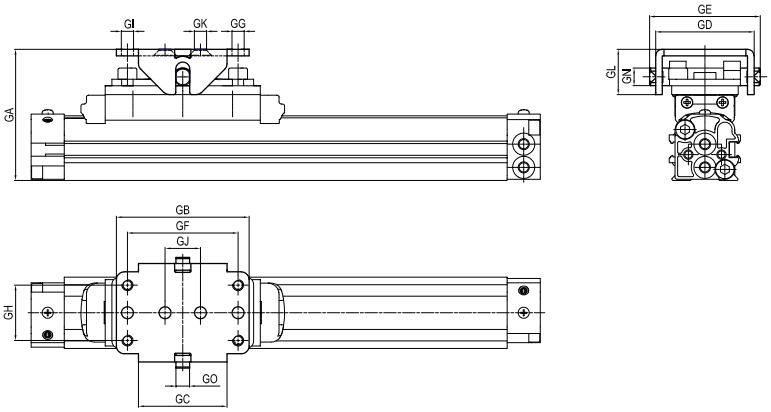

	Ø	GA	GB	GC	GD	GE	GF	GG Ø	GH	GI	GJ	GK Ø	GL	GM	GN Ø	GO	Mass g
USF 24016	16	58	60	40	44,5 ± 0,25	50	50	5,5	25	M5	16	5,5	20,5	3	8	6	195
USF 24025	25	73,5 ± 2,5	60	40	44,5 ± 2,5	50	50	5,5	25	M5	16	5,5	20,5	3	8	6,15	142
USF 24032	32	89 ± 4	100	60	56 ± 4	64	80	5,5	30	M6	40	6,5	30	4	12	8,2	362
USF 24040	40	108,5 ± 4	100	60	56 ± 4	64	80	5,5	30	M6	40	6,5	30	4	12	8,2	362

Use in case of external guide

USF 26

FEMALE THREADED CONNECTION

Material: Zinc-plated steel

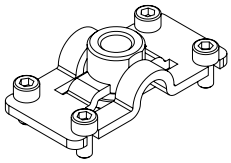

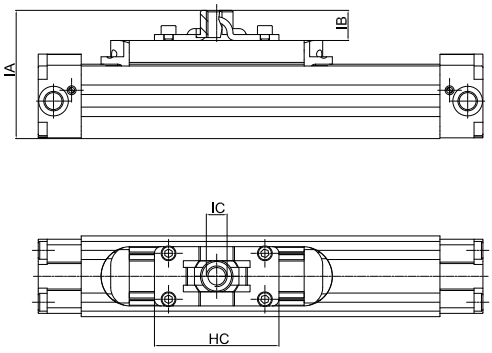

	Ø	IA	IB	IC	HC	Mass g
USF 26016	16	61	22	M12	64	132
USF 26025	25	75,6	18	M12	64	76
USF 26032	32	87,2	21	M14	84	157
USF 26040	40	106,8	21	M14	84	157

USF 27

MALE THREADED PIN

Material: Zinc-plated steel

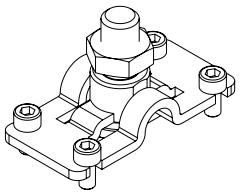

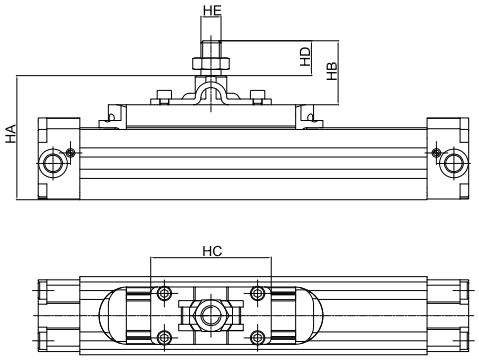

	Ø	HA	HB	HC	HD	HE	Mass g
USF 27016	16	76,5	37,5	64	22	M12	160
USF 27025	25	91,1	33,5	64	22	M12	105
USF 27032	32	107,7	41,5	84	24,3	M14	260
USF 27040	40	127,3	41,5	84	24,3	M14	260

USF 28

FEMALE CONNECTION WITHOUT THREAD

Material: Zinc-plated steel

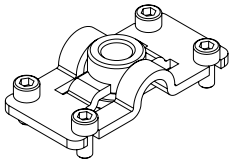

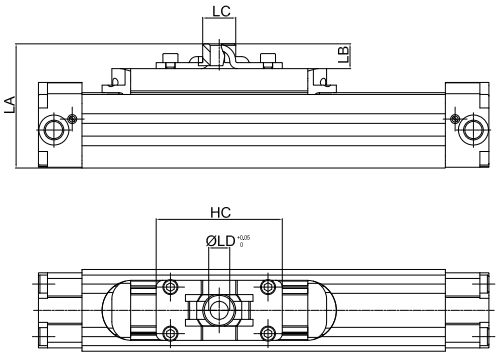

	Ø	LA	LB	LC	LD	LH	Mass g
USF 28016	16	56	17	18	10	64	129
USF 28025	25	70,6	13	18	10	64	73
USF 28032	32	83,4	17,2	22	12	84	152
USF 28040	40	103	17,2	22	12	84	152

LOCKING UNITS FOR RODLESS CYLINDERS

TECHNICAL CHARACTERISTICS

Our locking Units for rodless cylinders perform the function of keeping the carriage in any intended point of its stroke and allow high locking accuracy.
They can be mounted on both sides of the carriage and the mechanical braking force can be further increased by means of an additional pneumatic override.



Pressure
65.3 ÷ 145 psi (4.5 ÷ 10 bar)

Temperatures
-4 °F ~ 176 °F
-20 °C ~ 80 °C

Fluid
filtered air, with or without lubrication

Bore
25 - 32 - 40 - 50 mm

Materials and Components
- Body in die-cast aluminum
- Seals in NBR
- Internal parts in brass/aluminum

Series	Bore (mm)
U L 6 S 5	0 2 5
UL6S5 = Locking units for S5 series rodless cylinders	25 = Ø25 32 = Ø32 40 = Ø40 50 = Ø50

Characteristics
- Min release pressure 65.3 psi (4.5 bar)
- Able to keep the carriage in position in both directions
- Easy installation, possible by both the carriage sides indifferently.
- Permanent manual release by tightening two M5 screws.
- Locking by means of mechanic springs acting over the carriage in event of lack of air pressure (A).
- To increase the locking force, this unit is ready for an additional pneumatic override (CH).

US5 SERIES WITH L6 LOCKING UNIT

MANUAL RELEASE M5X12



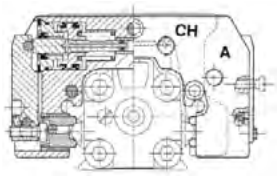

STATIC LOCKING FORCE

Ø	Force N	A = CH
25	810	M5
32	1185	G1/8
40	825	G1/8
50	1235	G1/8

MASS

Code	Ø	Locking unit g
UL6 S5025	25	350
UL6 S5032	32	460
UL6 S5040	40	820
UL6 S5050	50	1450

A = Pneumatic release
CH = Additional pneumatic override

SCHEME OF WORKING PRINCIPLE

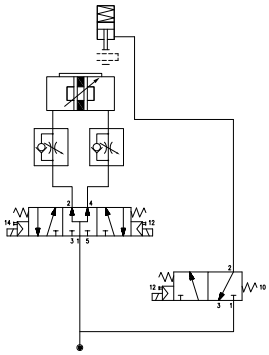

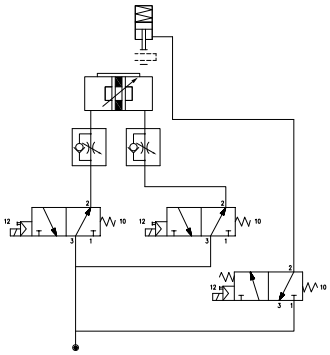

US5



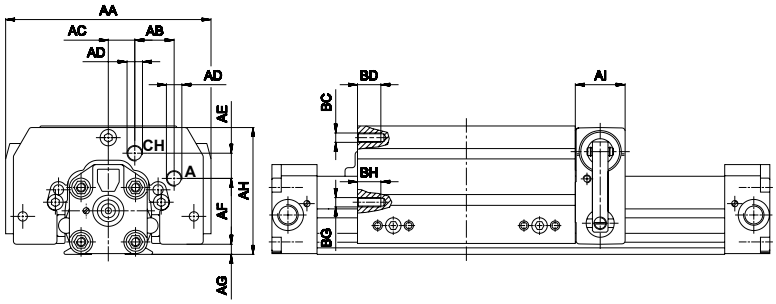

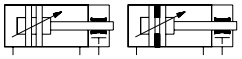

A = Pneumatic release
CH = Additional pneumatic override

FIXING Ø 25 - 32 - 40

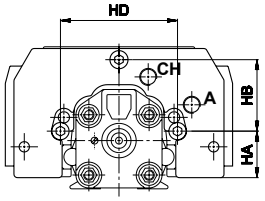

A = Pneumatic release
CH = Additional pneumatic override

FIXING Ø 50

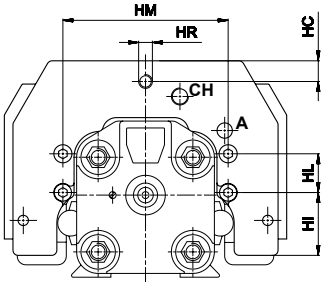

A = Pneumatic release
CH = Additional pneumatic override

Ø	AA	AB	AC	AD	AE	AF	AG	AH	AI	BC	BD	BG	BH	HA	HB	HC	HD	HI	HL	HM	HR
25	120	24,5	12,5	M5	16,5	34,5	5	71,5	32	M6	15	M6	15	24,7	34,8	-	59,5	-	-	-	-
32	132	25,3	17	G1/8	16,2	42,3	6,5	81,5	32	M6	15	M6	15	27	41,5	-	68	-	-	-	-
40	150	26	17	G1/8	18,2	58,3	10	106	40	M6	15	M6	15	45,3	43,8	-	81,5	-	-	-	-
50	164	26	20	G1/8	19,8	72,5	12,7	125,7	51	M8	16	M6	15	-	-	12	-	36,5	22,5	96	M8x14

FIXING ELEMENTS AND ACCESSORIES

USF 12

FIXING PLATE

Material: Zinc-plated steel

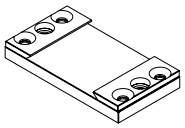

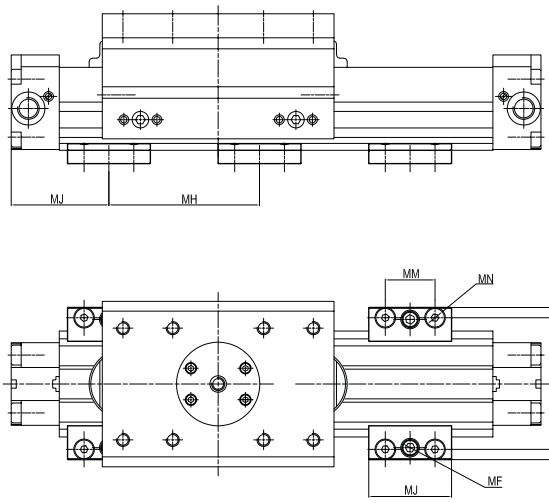

	Ø	MA	MB	MC	MD	ME	MF	MG	MH (a)	MI	MJ	ML	MM	MN	Mass g
USF 12025	25	78,5	63,5	50	79,8	12	M8	11	500	6,5	55	65,5	30	M6	310
USF 12032	32	92	77,5	50	90,5	12	M8	11	600	8,5	60	79,5	30	M6	340
USF 12040	40	117	96	60	116,6	15	M10	14	700	8	70	96	37,5	M8	660
USF 12050	50	136	115	60	133,7	15	M10	14	800	8	70	115	37,5	M8	700

(a) = Max allowable dimension to limit the bending of cylinder according to the stroke and to provide a correct fixing

USF 13

ANGLE BRACKET

Material: Zinc-plated steel

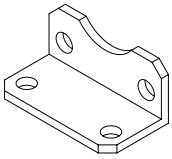

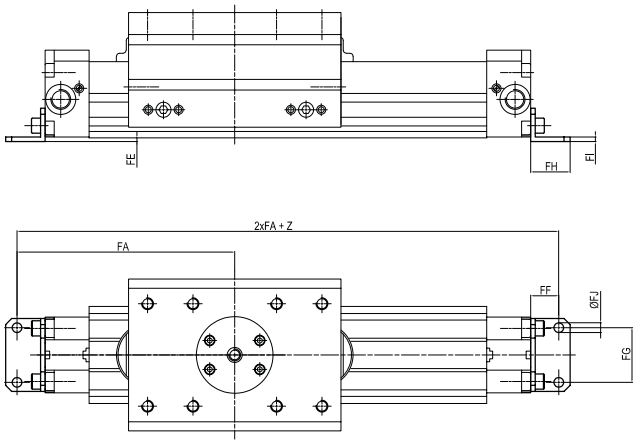

	Ø	FA	FB	FC	FD	FE	FF	FG	FH	FI	FJ Ø	Mass g
USF 13025	25	116	58,1	48,8	40	0,5	16	27	22	2,5	5,5	34
USF 13032	32	143,5	68,7	59,2	48	2,5	18,5	36	26	3	6,5	53

USF 13

BRACKET

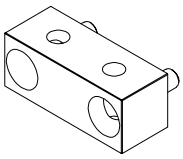

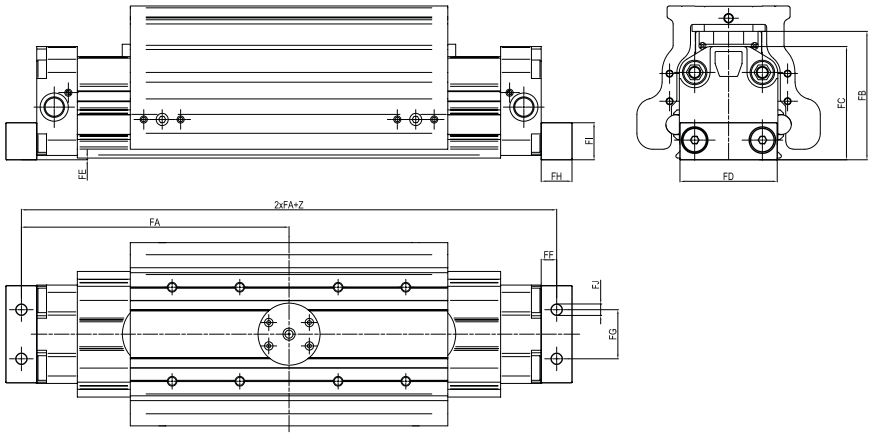

Material: Anodized aluminum

	Ø	FA	FB	FC	FD	FE	FF	FG	FH	FI	FJ Ø	Mass g
USF 13040	40	162,5	86,5	74,9	63	0,7	12,5	30	25	25	9	116
USF 13050	50	187,5	104,3	92,4	79	1,3	12,5	40	25	30	9,3	170

NOTES