AIGNEP

Actuator Series

Cartridge Cylinders
Ø 6-16 mm



CA - CAF Series
Pg. 20.3

Mini Cylinders ISO 6432
Ø 8-25 mm



Mini Series
Pg. 20.5

Mini Stainless Steel Cylinders
ISO 6432 Ø 16-25 mm



Mini Stainless Steel Series
Pg. 20.13

Limited Space
Ø 32-63 mm



A95 Series
Pg. 20.16

Compact Cylinders
Ø 12-100 mm



Q Series
Pg. 20.23

ISO 15552 Cylinders
Ø 32-125 mm



L Series
Pg. 20.36

ISO 6431 Cylinders
Ø 160-320 mm



E Series
Pg. 20.45

Stainless Steel ISO 15552 Cylinders
Ø 32-125 mm



V Series
Pg. 20.47

Twin Rod Cylinders
Ø 32-100 mm



NHA Series
Pg. 20.50

Compact Cylinders ISO 21287
Ø 20-100 mm



W Series
Pg. 20.54

Cylinder Accessories
ISO 6431 - ISO 15552 - ISO 21287



Accessories
Pg. 20.62

Magnetic Position Sensing Switches



Sensors
Pg. 20.72

Rodless Actuator Series

Rodless Cylinders Standard Version



S1 Series
Pg. 20.82

Rodless Cylinder with Integrated Guides in Technopolymer



S5 Series
Pg. 20.91

Click here to view the Actuator Series on our Website

AIGNEP

AIGNEP

PNEUMATIC ACTUATORS



Actuator Series

P.A.

SERIES Q - COMPACT CYLINDERS

TECHNICAL CHARACTERISTICS

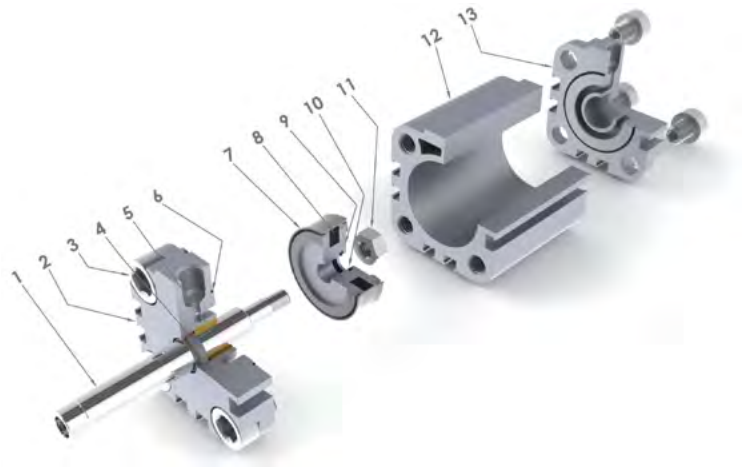





Component Parts and Materials

1	303 stainless steel piston rod (ø12-25) Chrome-plated steel piston rod (ø32-100)
2	Anodized aluminum end cap
3	Zinc-plated steel screw
4	Polyurethane rod seal
5	Sintered bronze rod bearing
6	NBR O-ring seals
7	Polyurethane piston seal
8	Bonded ferrite magnet
9	Aluminum piston
10	NBR O-ring seals (ø32-40)
11	Zinc-plated steel piston nut
12	Anodized aluminum body
13	Anodized aluminum end cap

Reference Standard

1907/2006 REACH✓ | 2011/65/CE RoHS | PED 2014/68/UE | SILICON FREE | ATEX 2014/34/UE

Pressures

14.5 psi (1 bar / 0.1 MPa)
145 psi (10 bar / 1 MPa)

Temperatures

32 °F ~ 176 °F
0 °C ~ 80 °C (- 4 °F / -20 °C with dry air)

Media

Filtered and lubricated or non-lubricated compressed air.

Functions

Single acting magnetic.
Double-acting magnetic.
Single or through piston rod magnetic.
Antirotation magnetic.

Bores

from 12 to 100 mm

Standard Strokes

from 5 to 200 mm

Series	Version	Ø (mm)	Stroke (mm)
Q F		0 1 2	0 0 2 5

▲ QB Single acting - magnetic
▲ QD Single acting - magnetic - spring extend
● QF Double acting - magnetic
● QJ Double acting - magnetic with double rod end
♦ QFA Double acting - magnetic - anti rotation

= Standard female rod
M = Male rod (NO QFA)

012
016
020
025
032
040
050
063
080
100

0005 0050
0010 0060
0015 0080
0020 0100
0025 0125
0030 0150
0040 0200

Intermediate or longer strokes are available upon request.

Ø (mm)	Stroke (mm)													
	5	10	15	20	25	30	40	50	60	80	100	125	150	200
12	▲●♦	▲●♦	●♦	●♦	●♦	●♦	●♦							
16	▲●♦	▲●♦	▲●♦	▲●♦	▲●♦	●♦	●♦							
20	▲●♦	▲●♦	▲●♦	▲●♦	▲●♦	●♦	●♦	●♦						
25	▲●♦	▲●♦	▲●♦	▲●♦	▲●♦	●♦	●♦	●♦						
32	▲●♦	▲●♦	▲●♦	▲●♦	▲●♦	●♦	●♦	●♦	●♦	●♦	●	●	●	
40	▲●♦	▲●♦	▲●♦	▲●♦	▲●♦	●♦	●♦	●♦	●♦	●♦	●	●	●	
50	▲●♦	▲●♦	▲●♦	▲●♦	▲●♦	●♦	●♦	●♦	●♦	●♦	●	●	●	●
63	▲●♦	▲●♦	▲●♦	▲●♦	▲●♦	●♦	●♦	●♦	●♦	●♦	●	●	●	●
80	▲●♦	▲●♦	▲●♦	▲●♦	▲●♦	●♦	●♦	●♦	●♦	●♦	●	●	●	●
100	▲●♦	▲●♦	▲●♦	▲●♦	▲●♦	●♦	●♦	●♦	●♦	●♦	●	●	●	●

FORCES, SPRING LOADS, AND AIR CONSUMPTION

Extend and Retract Forces

Cylinder Ø	Piston Rod Ø	Piston Area mm²	Operating pressure bar									
			1	2	3	4	5	6	7	8	9	10
			Output force N									
12	6	Extend = 113	10	20	30	40	50	60	70	80	90	100
		Retract = 85	7.5	15	22	30	37	45	52	60	68	75
16	8	Extend = 200	18	35	53	70	90	105	125	145	160	180
		Retract = 150	13	26	40	53	65	80	95	105	120	130
20	10	Extend = 314	28	55	85	110	140	170	195	220	250	280
		Retract = 235	21	42	60	85	105	125	150	170	190	210
25	10	Extend = 490	44	88	132	176	220	264	308	352	396	440
		Retract = 412	36	72	108	144	180	216	252	288	324	360
32	12	Extend = 804	72	144	216	288	360	432	504	576	648	720
		Retract = 691	62	124	186	248	310	372	434	496	558	620
40	12	Extend = 1257	110	220	330	440	550	660	770	880	990	1100
		Retract = 1144	100	200	300	400	500	600	700	800	900	1000
50	16	Extend = 1963	175	350	525	700	875	1050	1225	1400	1575	1750
		Retract = 1762	155	310	465	620	775	930	1085	1240	1395	1550
63	16	Extend = 3117	280	560	840	1120	1400	1680	1960	2240	2520	2800
		Retract = 2916	260	520	780	1040	1300	1560	1820	2080	2340	2600
80	20	Extend = 5027	450	900	1350	1800	2250	2700	3150	3600	4050	4500
		Retract = 4712	420	840	1260	1680	2100	2520	2940	3360	3780	4200
100	25	Extend = 7854	700	1400	2100	2800	3500	4200	4900	5650	6360	7000
		Retract = 7363	660	1320	1980	2640	3300	3960	4620	5280	5940	6600

Spring Loads

Cylinder	Spring load	Stroke (mm)				
Ø		5	10	15	20	25
				Output force N		
12	Load of spring at rest	7.5	6.8			
	Load of compressed spring	8	8			
16	Load of spring at rest	12.3	10.8	9.5	7.8	6.5
	Load of compressed spring	13.3	13.3	13.3	13.3	13.3
20	Load of spring at rest	15.7	14	12.2	10.4	8.7
	Load of compressed spring	17.4	17.4	17.4	17.4	17.4
25	Load of spring at rest	19.5	18.5	17.3	16	15
	Load of compressed spring	22	22	22	22	22
32	Load of spring at rest	27.8	25.3	22.8	20.2	17.7
	Load of compressed spring	30	30	30	30	30
40	Load of spring at rest	36.4	34	31.7	29.5	27
	Load of compressed spring	36	36	36	36	36
50	Load of spring at rest	32	30.5	29	27.8	26.5
	Load of compressed spring	35	35	35	35	35
63	Load of spring at rest	61	58.5	56.3	53.5	51.5
	Load of compressed spring	64.8	64.8	64.8	64.8	64.8
80	Load of spring at rest	91.3	88	85	82	78.7
	Load of compressed spring	94	94	94	94	94
100	Load of spring at rest	150	145	140	134	129
	Load of compressed spring	156	156	156	156	156

Air Consumption

Cylinder	Piston Rod	Piston Area	Operating pressure									
Ø	Ø	mm²	bar									
			1	2	3	4	5	6	7	8	9	10
			Air consumption for each 10 mm of stroke Nl									
12	6	Extend = 113	0.002	0.003	0.005	0.006	0.007	0.008	0.009	0.010	0.011	0.012
		Retract = 85	0.002	0.003	0.003	0.004	0.005	0.006	0.007	0.008	0.009	0.009
16	8	Extend = 200	0.004	0.006	0.008	0.010	0.012	0.014	0.016	0.018	0.020	0.022
		Retract = 150	0.003	0.005	0.006	0.008	0.009	0.011	0.012	0.014	0.015	0.017
20	10	Extend = 314	0.006	0.009	0.013	0.016	0.019	0.022	0.025	0.028	0.031	0.035
		Retract = 235	0.005	0.007	0.009	0.012	0.014	0.016	0.019	0.021	0.024	0.026
25	10	Extend = 490	0.010	0.015	0.020	0.025	0.029	0.034	0.039	0.044	0.049	0.054
		Retract = 412	0.008	0.012	0.016	0.021	0.025	0.029	0.033	0.037	0.041	0.045
32	12	Extend = 804	0.016	0.024	0.032	0.040	0.048	0.056	0.064	0.072	0.080	0.088
		Retract = 691	0.014	0.021	0.028	0.035	0.041	0.048	0.055	0.062	0.069	0.076
40	12	Extend = 1257	0.025	0.038	0.050	0.063	0.075	0.088	0.101	0.113	0.126	0.138
		Retract = 1144	0.023	0.034	0.046	0.057	0.069	0.080	0.092	0.103	0.114	0.126
50	16	Extend = 1963	0.039	0.059	0.079	0.098	0.118	0.137	0.157	0.177	0.196	0.216
		Retract = 1762	0.035	0.053	0.070	0.088	0.106	0.123	0.141	0.159	0.176	0.194
63	16	Extend = 3117	0.062	0.094	0.125	0.156	0.187	0.218	0.249	0.281	0.312	0.343
		Retract = 2916	0.058	0.087	0.117	0.146	0.175	0.204	0.233	0.262	0.292	0.321
80	20	Extend = 5027	0.101	0.151	0.201	0.251	0.302	0.352	0.402	0.452	0.503	0.553
		Retract = 4712	0.094	0.141	0.188	0.236	0.283	0.330	0.377	0.424	0.471	0.518
100	25	Extend = 7854	0.157	0.236	0.314	0.393	0.471	0.550	0.628	0.707	0.785	0.864
		Retract = 7363	0.147	0.221	0.295	0.368	0.442	0.515	0.589	0.663	0.736	0.810

QB

SINGLE ACTING - MAGNETIC

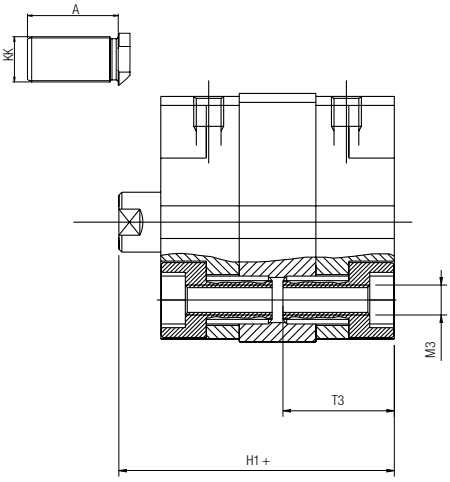



Ø 12-16-20-25



Ø 32-40-50-63-80-100

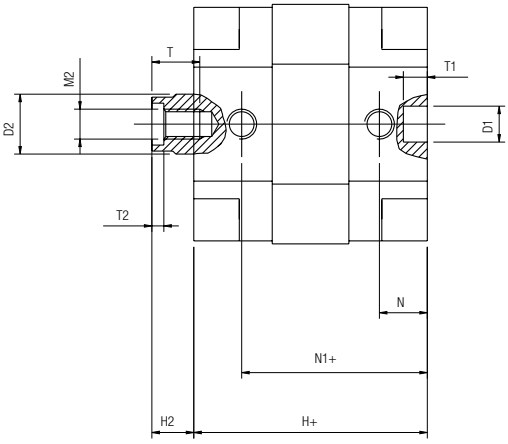

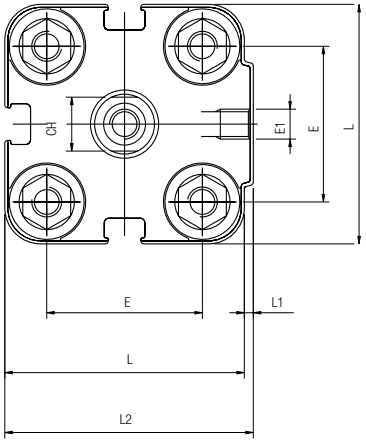

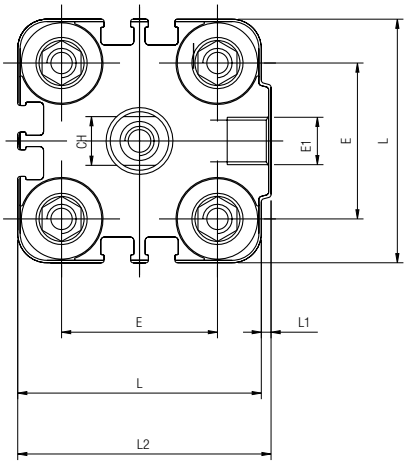

+ = Add Stroke

Ø	KK	A	T	T1	T2	D1	L	E1	M3	T3	M2	H	H2	D2	N	N1	L2	E	L1	H1	CH
12	M6	16	6	4	1.5	6	29	M5	M4	16	M3	35	7.5	6	6.5	28.5	30	18	1	42.5	5
16	M8	20	8	4	2	6	29	M5	M4	16	M4	35	8.5	8	6.5	28.5	30	18	1	43.5	7
20	M10X1,25	22	8	4	2	6	36	M5	M5	18.5	M5	39	7	10	8	31	37.5	22	1.5	46	9
25	M10X1,25	22	8	4	2	6	40	M5	M5	18.5	M5	39	7	10	8	31	41.5	26	1.5	46	9
32	M10X1,25	22	10	4	2.8	6	50	G1/8	M6	21.5	M6	42	7	12	6.5	35.5	52	32	2	49	10
40	M10X1,25	22	10	4	2.8	6	60	G1/8	M6	21.5	M6	45.5	8.5	12	7.5	38	62.5	42	2.5	54	10
50	M12X1,25	24	12	4	3.5	6	68	G1/8	M8	23.5	M8	45.5	10	16	7.5	38	71	50	3	55.5	13
63	M12X1,25	24	12	4	3.5	8	87	G1/8	M10	28.5	M8	51	10.5	16	7.5	43.5	91	62	4	61.5	13
80	M16X1,5	32	16	4	4.5	8	107	G1/8	M10	28.5	M10	62	12	20	9.5	52.5	111	82	4	75	17
100	M20X1,5	40	20	4	6	8	128	G1/4	M10	28.5	M12	68	15.5	25	10.5	57.5	133	103	5	83.5	22

QD

SINGLE ACTING - MAGNETIC - SPRING EXTEND



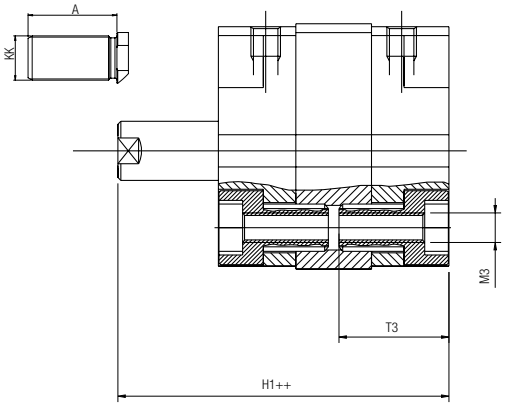



Ø 12-16-20-25



Ø 32-40-50-63-80-100

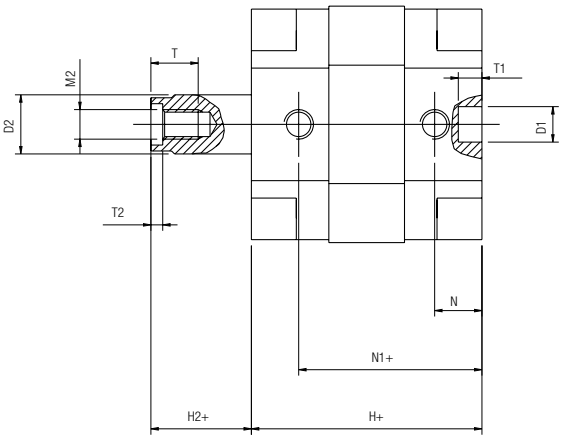

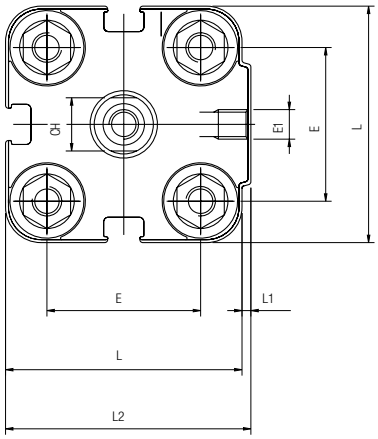

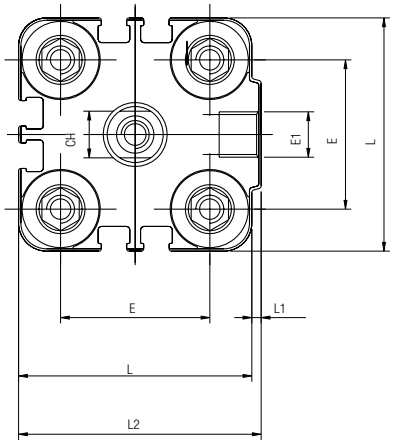

+ = Add Stroke ++ = Double stroke dimension and add it

Ø	KK	A	T	T1	T2	D1	L	E1	M3	T3	M2	H	H2	D2	N	N1	L2	E	L1	H1	CH
12	M6	16	6	4	1.5	6	29	M5	M4	16	M3	35	7.5	6	6.5	28.5	30	18	1	42.5	5
16	M8	20	8	4	2	6	29	M5	M4	16	M4	35	8.5	8	6.5	28.5	30	18	1	43.5	7
20	M10X1,25	22	8	4	2	6	36	M5	M5	18.5	M5	39	7	10	8	31	37.5	22	1.5	46	9
25	M10X1,25	22	8	4	2	6	40	M5	M5	18.5	M5	39	7	10	8	31	41.5	26	1.5	46	9
32	M10X1,25	22	10	4	2.8	6	50	G1/8	M6	21.5	M6	42	7	12	6.5	35.5	52	32	2	49	10
40	M10X1,25	22	10	4	2.8	6	60	G1/8	M6	21.5	M6	45.5	8.5	12	7.5	38	62.5	42	2.5	54	10
50	M12X1,25	24	12	4	3.5	6	68	G1/8	M8	23.5	M8	45.5	10	16	7.5	38	71	50	3	55.5	13
63	M12X1,25	24	12	4	3.5	8	87	G1/8	M10	28.5	M8	51	10.5	16	7.5	43.5	91	62	4	61.5	13
80	M16X1,5	32	16	4	4.5	8	107	G1/8	M10	28.5	M10	62	12	20	9.5	52.5	111	82	4	75	17
100	M20X1,5	40	20	4	6	8	128	G1/4	M10	28.5	M12	68	15.5	25	10.5	57.5	133	103	5	83.5	22

QF

DOUBLE ACTING - MAGNETIC

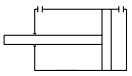

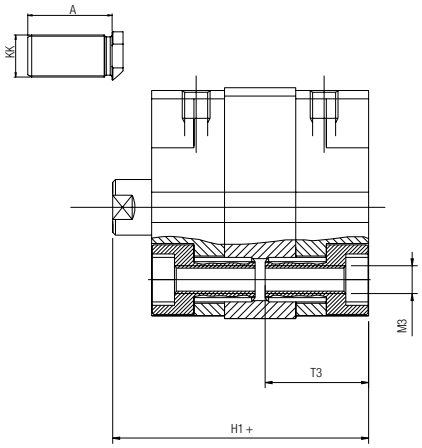



Ø 12-16-20-25



Ø 32-40-50-63-80-100

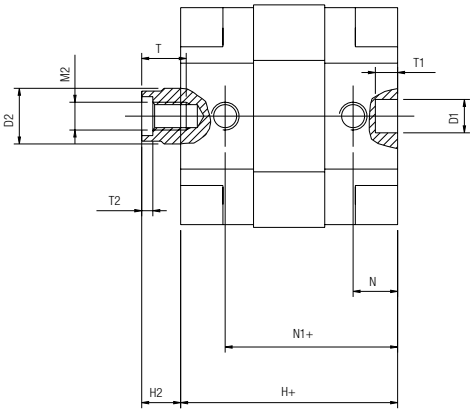

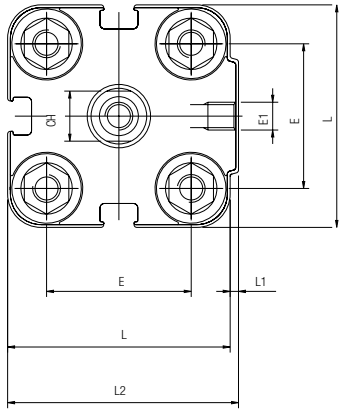

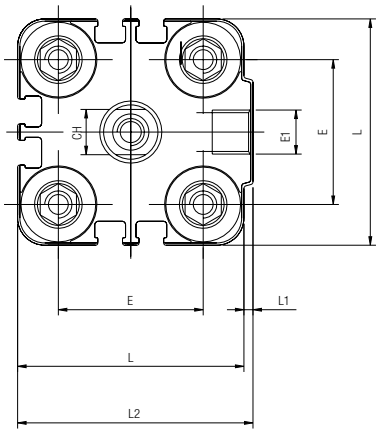

+ = Add Stroke

Ø	KK	A	T	T1	T2	D1	L	E1	M3	T3	M2	H	H2	D2	N	N1	L2	E	L1	H1	CH
12	M6	16	6	4	1.5	6	29	M5	M4	16	M3	35	7.5	6	6.5	28.5	30	18	1	42.5	5
16	M8	20	8	4	2	6	29	M5	M4	16	M4	35	8.5	8	6.5	28.5	30	18	1	43.5	7
20	M10X1,25	22	8	4	2	6	36	M5	M5	18.5	M5	39	7	10	8	31	37.5	22	1.5	46	9
25	M10X1,25	22	8	4	2	6	40	M5	M5	18.5	M5	39	7	10	8	31	41.5	26	1.5	46	9
32	M10X1,25	22	10	4	2.8	6	50	G1/8	M6	21.5	M6	42	7	12	6.5	35.5	52	32	2	49	10
40	M10X1,25	22	10	4	2.8	6	60	G1/8	M6	21.5	M6	45.5	8.5	12	7.5	38	62.5	42	2.5	54	10
50	M12X1,25	24	12	4	3.5	6	68	G1/8	M8	23.5	M8	45.5	10	16	7.5	38	71	50	3	55.5	13
63	M12X1,25	24	12	4	3.5	8	87	G1/8	M10	28.5	M8	51	10.5	16	7.5	43.5	91	62	4	61.5	13
80	M16X1,5	32	16	4	4.5	8	107	G1/8	M10	28.5	M10	62	12	20	9.5	52.5	111	82	4	75	17
100	M20X1,5	40	20	4	6	8	128	G1/4	M10	28.5	M12	68	15.5	25	10.5	57.5	133	103	5	83.5	22

QJ

SINGLE ACTING - MAGNETIC WITH DOUBLE ROD END

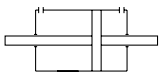

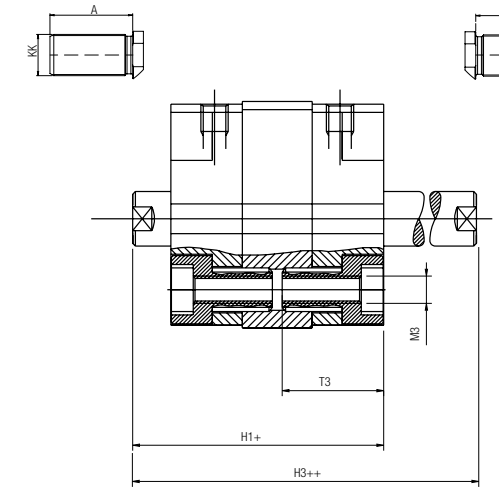



Ø 12-16-20-25



Ø 32-40-50-63-80-100

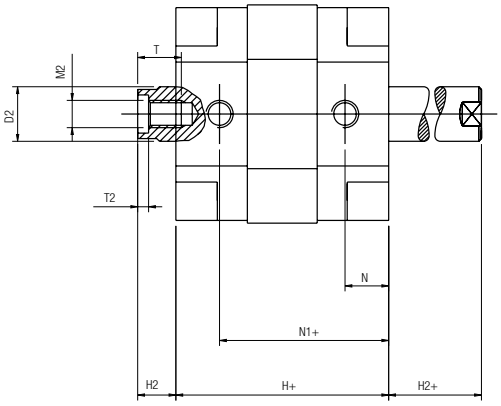

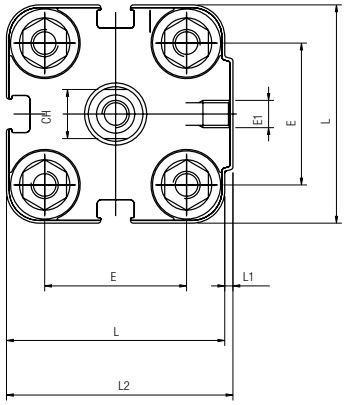

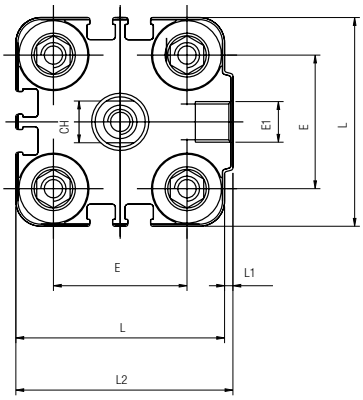

+ = Add Stroke ++ = Double stroke dimension and add it

Ø	KK	A	T	M2	T2	D2	L	E1	M3	T3	CH	H	H2	H3	N	N1	L2	E	L1	H1
12	M6	16	6	M3	1.5	6	29	M5	M4	16	5	35	7.5	50	6.5	28.5	30	18	1	42.5
16	M8	20	8	M4	2	8	29	M5	M4	16	7	35	8.5	52	6.5	28.5	30	18	1	43.5
20	M10X1,25	22	8	M5	2	10	36	M5	M5	18.5	9	39	7	53	8	31	37.5	22	1.5	46
25	M10X1,25	22	8	M5	2	10	40	M5	M5	18.5	9	39	7	53	8	31	41.5	26	1.5	46
32	M10X1,25	22	10	M6	2.8	12	50	G1/8	M6	21.5	10	42	7	56	6.5	35.5	52	32	2	49
40	M10X1,25	22	10	M6	2.8	12	60	G1/8	M6	21.5	10	45.5	8.5	62.5	7.5	38	62.5	42	2.5	54
50	M12X1,25	24	12	M8	3.5	16	68	G1/8	M8	23.5	13	45.5	10	65.5	7.5	38	71	50	3	55.5
63	M12X1,25	24	12	M8	3.5	16	87	G1/8	M10	28.5	13	51	10.5	72	7.5	43.5	91	62	4	61.5
80	M16X1,5	32	16	M10	4.5	20	107	G1/8	M10	28.5	17	62	12	86	9.5	52.5	111	82	4	75
100	M20X1,5	40	20	M12	6	25	128	G1/4	M10	28.5	22	68	15.5	99	10.5	57.5	133	103	5	83.5

QFA

DOUBLE ACTING - MAGNETIC - ANTI ROTATION

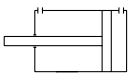

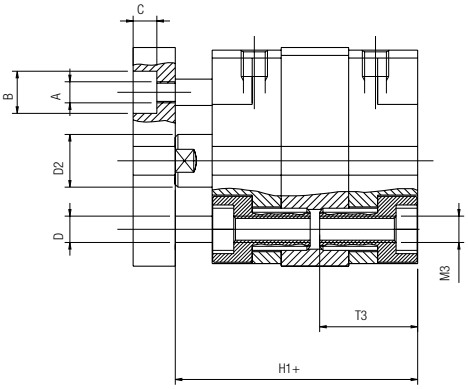



Ø 12-16-20-25



Ø 32-40-50-63-80-100

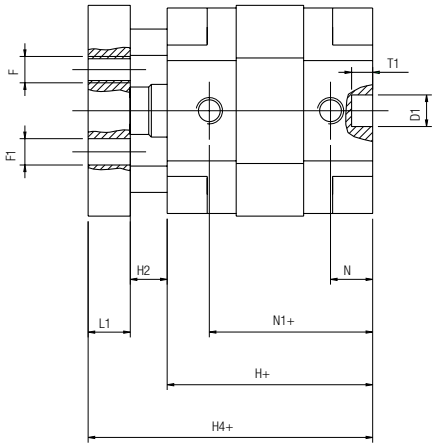

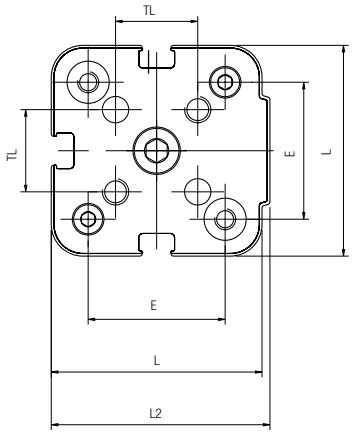

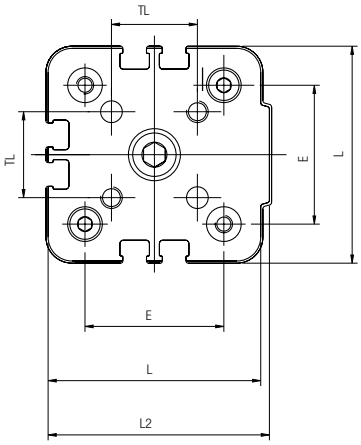

+ = Add Stroke

Ø	A	B	C	D	D1	D2	E	F	F1	H	H1	H2	H4	L	L1	L2	M3	N	N1	T1	T3	TL
12	M3	6	3.5	4	6	6	18	M3	3	35	42.5	7.5	47.5	29	5	30	M4	6.5	28.5	4	16	9.9
16	M3	6	3.5	4	6	8	18	M3	3	35	43.5	8.5	48.5	29	5	30	M4	6.5	28.5	4	16	9.9
20	M3	6	3.5	6	6	10	22	M4	4	39	46	7	54	36	8	37.5	M5	8	31	4	18.5	12
25	M4	8	4.5	6	6	10	26	M5	5	39	46	7	54	40	8	41.5	M5	8	31	4	18.5	15.6
32	M4	8	5.5	6	6	12	32	M5	5	42	49	7	59	50	10	52	M6	6.5	35.5	4	21.5	19.8
40	M4	8	5.5	6	6	12	42	M5	5	45.5	54	8.7	64	60	10	62.5	M6	7.5	38	4	21.5	23.3
50	M6	11	7	8	6	16	50	M6	6	45.5	55.5	10.2	67.5	68	12	71	M8	7.5	38	4	23.5	29.7
63	M6	11	7	8	8	16	62	M6	6	51	61.5	10.5	73.5	87	12	91	M10	7.5	43.5	4	28.5	35.4
80	M8	14	9	12	8	20	82	M8	8	62	75	12	89	107	14	111	M10	9.5	52.5	4	28.5	46
100	M8	14	9	12	8	25	103	M10	10	68	83.5	15.5	97.5	128	14	133	M10	10.5	57.5	4	28.5	56.6

SERIES Q Mounting Accessories

QFL

FLANGE

ø 12-25



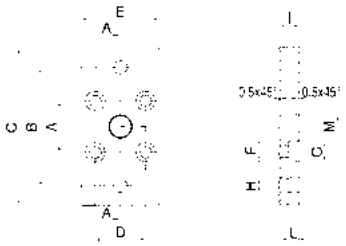

MATERIAL: Steel

Code	Ø	A	B	C	D	E	F	G	H	I	L	M
QFL 012	12 - 16	18	43	55	18	29	4.5	9	5.5	10	5.4	10
QFL 020	20	22	55	70	22	36	5.5	10	6.6	10	5.4	12
QFL 025	25	26	60	76	26	40	5.5	10	6.6	10	5.4	12

QFL

FLANGE

ø 32-100



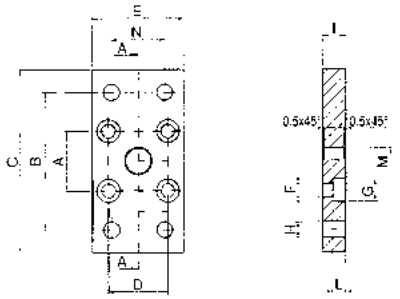

MATERIAL: Steel

Code	Ø	A	B	C	D	E	F	G	H	I	L	M	N
QFL 032	32	32	65	80	32	50	6.6	11	7	10	6.4	14	32
QFL 040	40	42	82	102	42	60	6.6	11	9	10	6.4	14	36
QFL 050	50	50	90	110	50	68	9	15	9	12	8.6	18	45
QFL 063	63	62	110	130	62	87	11	15	9	15	10.6	18	50
QFL 080	80	82	135	160	82	107	11	18	12	15	10.6	23	63
QFL 100	100	103	163	190	103	128	11	18	14	15	10.6	28	75

QCP

LOW-RISE PEDESTAL

ø 12-32



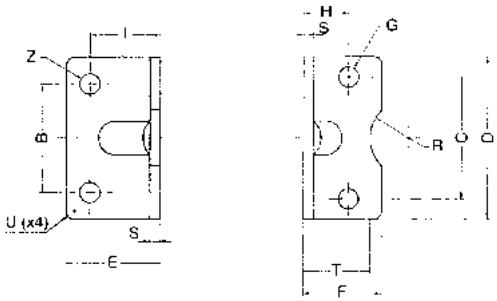

MATERIAL: Steel

Code	Ø	C	B	D	E	F	G	H	I	S	T	R	U	Z
QCP 012	12 - 16	18	18	30	17.5	17.5	4.4	13	13	3	15	9	2	5.5
QCP 020	20	22	22	36	22	22	5.4	16	16	4	17	10	2	6.6
QCP 025	25	26	26	40	22	23	5.4	17	16	4	19	11	2	6.6
QCP 032	32	32	32	50	26	24	6.6	16	18	5	20	12	2	6.6

QPC

LOW-RISE PEDESTAL

ø 40-100



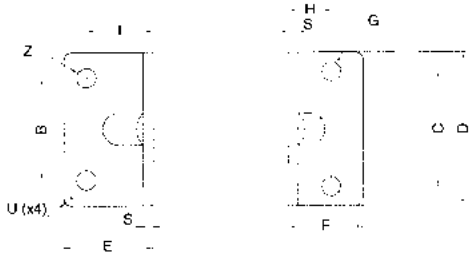

MATERIAL: Steel

Code	Ø	C	B	D	E	F	G	H	I	S	U	Z
QCP 040	40	42	42	60	28	29.5	6.6	21.5	20	5	5	9
QCP 050	50	50	50	68	32	30	9	22	24	6	5	9
QCP 063	63	62	62	84	39	39	9	28.5	27	6	5	11
QCP 080	80	82	82	102	36.5	36.5	11	24.5	30	8	5	11
QCP 100	100	103	103	123	38.5	38.5	11	26.5	33	8	5	13.5

QCM

EYE BRACKET WITH SELF-LUBRICATING BUSHINGS



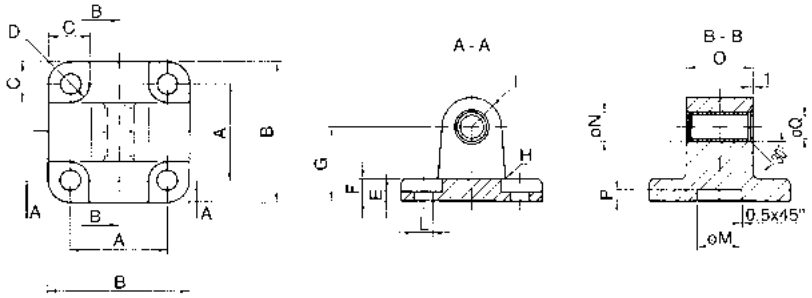

MATERIAL: Aluminum

Code	Ø	A	B	C	D	E	F	G	H	I	L	M	N	O	P	Q
QCM 012	12 - 16	18	27	10	4.5	2.6	6	16	2	6	4.5	10	8	12	3	6
QCM 020	20	22	34	11	5	2.6	6	20	2	8	5.5	12	10	16	3	8
QCM 025	25	26	38	11	5	2.6	6	20	2	8	5.5	12	10	16	3	8

QCF

CLEVIS BRACKET WITH SELF-LUBRICATING BUSHINGS



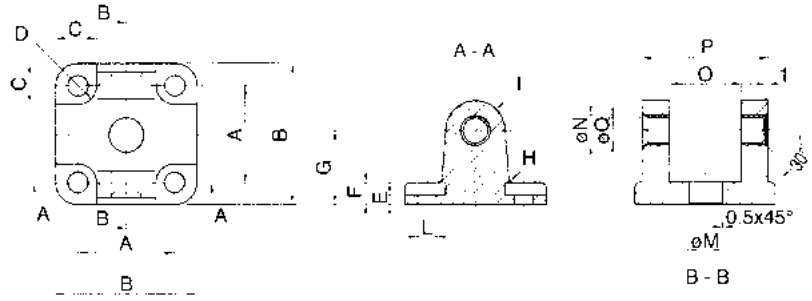

MATERIAL: Aluminum

Code	Ø	A	B	C	D	E	F	G	H	I	L	M	N	O	P	Q
QCF 032	32	32	48	13.5	5.5	5.5	9	22	2.5	10	6.6	14	12	26	45	10
QCF 040	40	42	58	13.5	5.5	5.5	9	25	2.5	12.5	6.6	14	14	28	52	12
QCF 050	50	50	66	15.5	7.5	6.5	11	27	2.5	12.5	9	18	14	32	60	12
QCF 063	63	62	83	18	7.5	6.5	11	32	4	15	11	18	18	40	70	16
QCF 080	80	82	102	19	9	10	13	36	4	15	11	23	18	50	90	16
QCF 100	100	103	123	19	9	10	15	41	4	20	11	28	23	60	110	20

VAS

EYE BRACKET



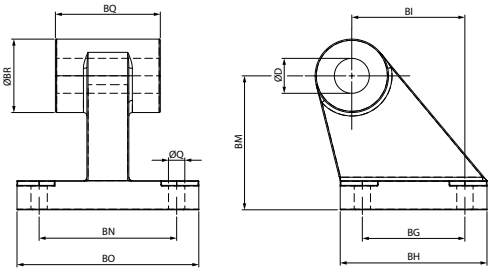

- MATERIAL: Aluminum
- MATERIAL: Stainless Steel

Code •	Code ■	Ø	Q	BG	BH	BI	BM	BN	BO	BQ	BR	ØD
VAS 032	VASI 032	32	6.6	18	31	21	32	38	51	26	20	10
VAS 040	VASI 040	40	6.6	22	35	24	36	41	54	28	22	12
VAS 050	VASI 050	50	9	30	45	33	45	50	65	32	26	12
VAS 063	VASI 063	63	9	35	50	37	50	52	67	40	30	16
VAS 080	VASI 080	80	11	40	60	47	63	66	86	50	30	16
VAS 100	VASI 100	100	11	50	70	55	71	76	96	60	38	20

VPE

PIN WITH RETAINER CLIPS



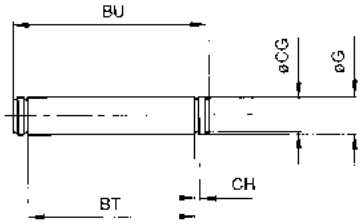

- MATERIAL: Steel
- MATERIAL: Stainless Steel

Code •	Code ■	Ø	G	BT	BU	CG	CH
VPE 032	VPEI 032	32	10	46	53	9.6	1.1
VPE 040	VPEI 040	40	12	53	60	11.5	1.1
VPE 050	VPEI 050	50	12	61	68	11.5	1.1
VPE 063	VPEI 063	63	16	71	78	15.2	1.1
VPE 080	VPEI 080	80	16	91	98	15.2	1.1
VPE 100	VPEI 100	100	20	111	118	19	1.3

TM

SPHERICAL ROD EYE WITH MALE THREAD



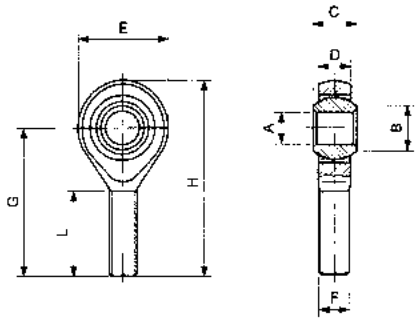

MATERIAL: Steel

Code	F	A	B	C	Ø Sphere	D	E	G	H	L	Radial load Dynamic	Radial load Static	Weight
TM 020	M5x0.8	5	7.5	8	11.11	7.5	18	33	42	19	430	1000	13
TM 032	M6x1	6	8.9	9	12.7	7.5	20	36	46	21	470	1100	15
TM 050	M8x1.25	8	10.4	12	15.88	9.5	24	42	54	25	780	1900	34
TM 080	M10x1.5	10	12.9	14	19.05	11.5	30	48	63	28	1200	3100	70
TM 100	M12x1.75	12	15.4	16	22.23	12.5	34	54	71	32	1400	3700	110