AIGNEP

Actuator Series

Cartridge Cylinders
Ø 6-16 mm



CA - CAF Series
Pg. 20.3

Mini Cylinders ISO 6432
Ø 8-25 mm



Mini Series
Pg. 20.5

Mini Stainless Steel Cylinders
ISO 6432 Ø 16-25 mm



Mini Stainless Steel Series
Pg. 20.13

Limited Space
Ø 32-63 mm



A95 Series
Pg. 20.16

Compact Cylinders
Ø 12-100 mm



Q Series
Pg. 20.23

ISO 15552 Cylinders
Ø 32-125 mm



L Series
Pg. 20.36

ISO 6431 Cylinders
Ø 160-320 mm



E Series
Pg. 20.45

Stainless Steel ISO 15552 Cylinders
Ø 32-125 mm



V Series
Pg. 20.47

Twin Rod Cylinders
Ø 32-100 mm



NHA Series
Pg. 20.50

Compact Cylinders ISO 21287
Ø 20-100 mm



W Series
Pg. 20.54

Cylinder Accessories
ISO 6431 - ISO 15552 - ISO 21287



Accessories
Pg. 20.62

Magnetic Position Sensing Switches



Sensors
Pg. 20.72

Rodless Actuator Series

Rodless Cylinders Standard Version



S1 Series
Pg. 20.82

Rodless Cylinder with Integrated Guides in Technopolymer



S5 Series
Pg. 20.91

Click here to view the Actuator Series on our Website

AIGNEP

AIGNEP

PNEUMATIC ACTUATORS



Actuator Series

P.A.

MINI CYLINDERS - ISO 6432

TECHNICAL CHARACTERISTICS

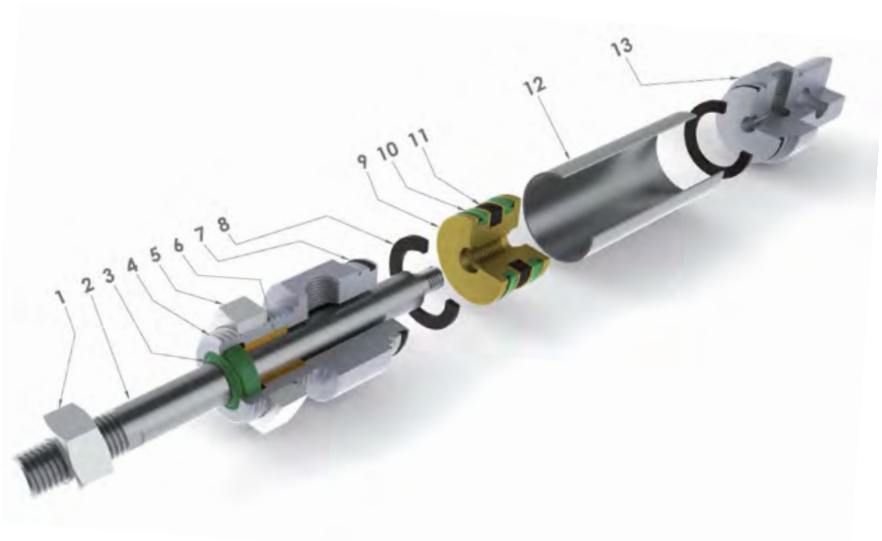



Component Parts and Materials

1	Zinc-plated steel rod jam nut
2	303 stainless steel piston rod
3	Polyurethane rod seal
4	Anodized aluminum end cap
5	Zinc-plated mounting nut
6	Sintered bronze rod bearing
7	NBR O-ring seals
8	Neoprene bumper
9	Brass piston
10	Polyurethane piston seal
11	Bonded ferrite magnet
12	304 stainless steel body
13	Anodized aluminum end cap

Reference Standard

1907/2006 REACH✓ | 2011/65/CE RoHS | PED 2014/68/UE | SILICON FREE | ATEX 2014/34/UE

Pressures

14.5 psi (1 bar / 0.1 MPa)
145 psi (10 bar / 1 MPa)

Temperatures

32 °F ~ 176 °F
0 °C ~ 80 °C (- 4 °F / -20 °C with dry air)

Media

Filtered and lubricated or non-lubricated compressed air

Functions

Single acting magnetic or non-magnetic. Double acting single or double end rod, magnetic or non-magnetic, cushioned or non-cushioned.

Bores

8 - 10 - 12 - 16 - 20 - 25 mm

Standard Strokes

from 10 to 320 mm

FORCES, SPRING LOADS, AND AIR CONSUMPTION

Extend and Retract Forces

Cylinder	Piston rod	Piston Area	Operating pressure									
Ø	Ø	mm²	bar									
			1	2	3	4	5	6	7	8	9	10
			Output force N									
8	4	Extend = 50.2	5	10	15	20	25	30	35	40	45	50
		Retract = 37.7	3	6	9	12	15	18	21	24	27	30
10	4	Extend = 78.5	7	14	21	28	35	42	49	56	63	70
		Retract = 66	6	12	18	24	30	36	42	48	54	60
12	6	Extend = 113	10	20	30	40	50	60	70	80	90	100
		Retract = 85	7.5	15	22	30	37	45	52	60	68	75
16	6	Extend = 200	18	36	54	72	90	108	126	144	162	180
		Retract = 173	16	32	48	64	80	96	112	128	144	160
20	8	Extend = 314	28	56	84	112	140	168	196	224	252	280
		Retract = 264	24	48	72	96	120	144	168	192	216	240
25	10	Extend = 490	44	88	132	176	220	264	308	352	396	440
		Retract = 412	36	72	108	144	180	216	252	288	324	360

Spring Loads

Cylinder	Spring load	Stroke (mm)		
Ø		10	25	50
		Output force N		
8	Load of spring at rest	4.1	3.5	2.6
	Load of compressed spring	4.5	4.5	4.5
10	Load of spring at rest	4.1	3.5	2.6
	Load of compressed spring	4.5	4.5	4.5
12	Load of spring at rest	5.5	4.8	3.5
	Load of compressed spring	6	6	6
16	Load of spring at rest	16.5	13.7	9
	Load of compressed spring	18.3	18.3	18.3
20	Load of spring at rest	19	15.5	9.5
	Load of compressed spring	21.5	21.5	21.5
25	Load of spring at rest	27	24	13.5
	Load of compressed spring	29	29	29

Air Consumption

Cylinder	Piston Rod	Piston Area	Operating pressure									
Ø	Ø	mm²	bar									
			1	2	3	4	5	6	7	8	9	10
			Air consumption for each 10 mm of stroke Nl									
8	4	Extend = 50.2	0.001	0.002	0.002	0.003	0.003	0.004	0.004	0.005	0.005	0.006
		Retract = 37.7	0.001	0.001	0.002	0.002	0.002	0.003	0.003	0.003	0.004	0.004
10	4	Extend = 78.5	0.002	0.002	0.003	0.004	0.005	0.005	0.006	0.007	0.008	0.009
		Retract = 66	0.001	0.002	0.003	0.003	0.004	0.005	0.005	0.006	0.007	0.007
12	6	Extend = 113	0.002	0.003	0.005	0.006	0.007	0.008	0.009	0.010	0.011	0.012
		Retract = 85	0.002	0.003	0.003	0.004	0.005	0.006	0.007	0.008	0.009	0.009
16	6	Extend = 200	0.004	0.006	0.008	0.010	0.012	0.014	0.016	0.018	0.020	0.022
		Retract = 173	0.003	0.005	0.007	0.009	0.010	0.012	0.014	0.016	0.017	0.019
20	8	Extend = 314	0.006	0.009	0.013	0.016	0.019	0.022	0.025	0.028	0.031	0.035
		Retract = 264	0.005	0.008	0.011	0.013	0.016	0.018	0.021	0.024	0.026	0.029
25	10	Extend = 490	0.010	0.015	0.020	0.025	0.029	0.034	0.039	0.044	0.049	0.054
		Retract = 412	0.008	0.012	0.016	0.021	0.025	0.029	0.033	0.037	0.041	0.045

Series	Execution	Ø (mm)	Stroke (mm)	Special version
M F		0 0 8	0 0 2 5	V S

- ▲ MB Single acting - magnetic
- ■ MD Single acting - magnetic Spring extend
- ● MF Double acting - magnetic
- ○ MFN Double acting - magnetic - head cut port at 90°
- ○ MFX Double acting - magnetic - head cut port on axis
- ♦ MH Double acting - cushioned - magnetic
- ○ MJ Double acting - magnetic with double rod end
- ♦ ML Double acting - cushioned - magnetic with double rod end
- ○ MFA Double acting - magnetic hexagonal anti-rotation

= Male rod
L Piston Rod Lock

008 010 012 016 020 025

0010 0025 0050 0080 0100 0125 0150 0160 0200 0250 0320

Intermediate or longer strokes are available upon request.

VS Rod Seals in FKM
V Seals in FKM

Ø (mm)	Stroke (mm) 10	25	50	80	100	125	160	200	250	320
8	▲●	▲●	▲●	●	●	●				
10	▲●	▲●	▲●	●	●	●				
12	▲●	▲●	▲●	●	●	●	●	●	●	
16	▲■●○	▲■●♦○	▲■●♦○	●♦○	●♦○	●♦○	●♦○	●♦○	●♦○	
20	▲■●○	▲■●♦○	▲■●♦○	●♦○	●♦○	●♦○	●♦○	●♦○	●♦○	●♦○
25	▲■●○	▲■●♦○	▲■●♦○	●♦○	●♦○	●♦○	●♦○	●♦○	●♦○	●♦○

MB

SINGLE ACTING - MAGNETIC

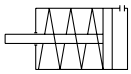



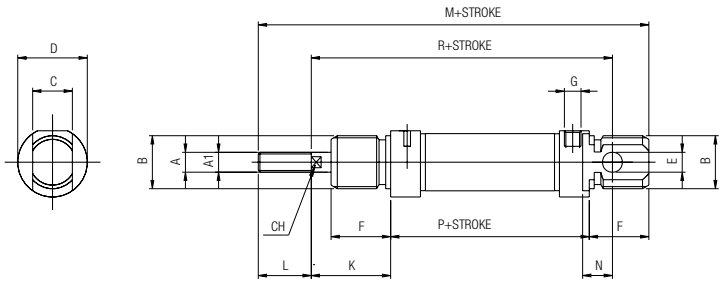

Ø	A	A1	B	C	D	E	F	G	K	L	M	N	P	R	CH
8	M4	4	M12x1.25	8	16	4	12	M5	16	12	86	6	46	64	-
10	M4	4	M12x1.25	8	16	4	12	M5	16	12	86	6	46	64	-
12	M6	6	M16x1.5	12	19	6	18	M5	22	16	104	9	48	75	5
16	M6	6	M16x1.5	12	19	6	18	M5	22	16	109	9	53	82	5
20	M8	8	M22x1.5	16	27	8	20	1/8G	24	20	131	12	67	95	7
25	M10x1.25	10	M22x1.5	16	30	8	22	1/8G	28	22	140	12	68	104	9

MD

SINGLE ACTING - MAGNETIC - SPRING EXTEND





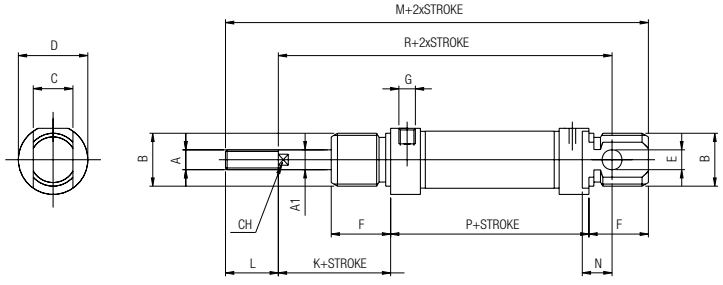

Ø	A	A1	B	C	D	E	F	G	K	L	M	N	P	R	CH
16	M6	6	M16x1.5	12	19	6	18	M5	22	16	134.5	9	78.5	107.5	5
20	M8	8	M22x1.5	16	27	8	20	1/8G	24	20	154	12	90	118	7
25	M10x1.25	10	M22x1.5	16	30	8	22	1/8G	28	22	166	12	94	130	9

MF

DOUBLE ACTING - MAGNETIC



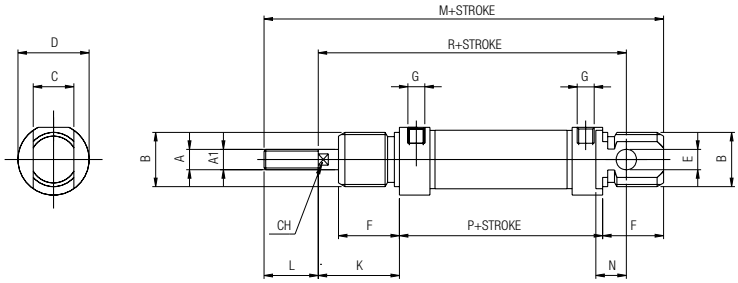

Ø	A	A1	B	C	D	E	F	G	K	L	M	N	P	R	CH
8	M4	4	M12x1.25	8	16	4	12	M5	16	12	86	6	46	64	-
10	M4	4	M12x1.25	8	16	4	12	M5	16	12	86	6	46	64	-
12	M6	6	M16x1.5	12	19	6	18	M5	22	16	104	9	48	75	5
16	M6	6	M16x1.5	12	19	6	18	M5	22	16	109	9	53	82	5
20	M8	8	M22x1.5	16	27	8	20	1/8G	24	20	131	12	67	95	7
25	M10x1.25	10	M22x1.5	16	30	8	22	1/8G	28	22	140	12	68	104	9

MFA

DOUBLE ACTING MAGNETIC HEXAGONAL ANTI-ROTATION



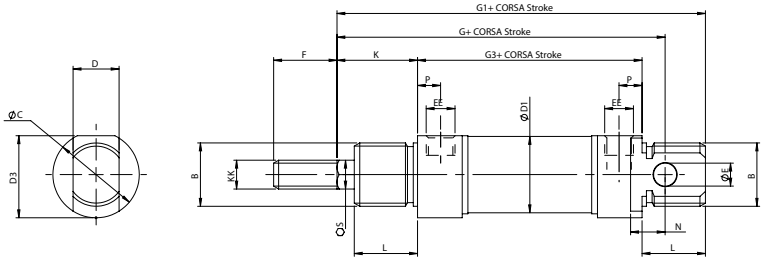

Ø	B	⬡S	ØC	D	ØD1	D3	ØE	EE	F	G	G1	G3	K	KK	L	N	P
16	M6x1.5	6	19	12	17.27	18	6	M5	16	82	93	53	22	M6x1	18	9	4.5
20	M22x1.5	8	27	16	21.27	25.5	8	1/8"G	20	95	111	67	24	M8x1.25	20	12	8
25	M22x1.5	10	30	16	26.5	28.5	8	1/8"G	22	104	118	68	28	M10x1.25	22	12	8

MFN

DOUBLE ACTING - MAGNETIC - HEAD CUT, PORT AT 90°



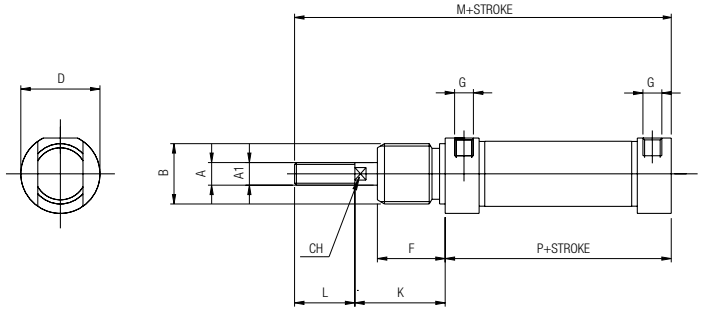

Ø	A	A1	B	D	G	K	L	M	P	CH	F
16	M6	6	M16x1.5	21	M5	22	16	91.5	53	5	18
20	M8	8	M22x1.5	27	1/8G	24	20	111.5	67	7	2
25	M10x1.25	10	M22x1.5	30	1/8G	28	22	118.5	68	9	22

MFX

DOUBLE ACTING - MAGNETIC - HEAD CUT, PORT ON AXIS



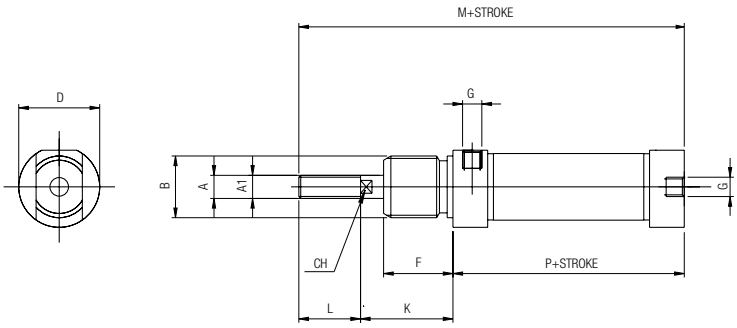

Ø	A	A1	B	D	G	K	L	M	P	CH	F
16	M6	6	M16x1.5	21	M5	22	16	91.5	53	5	18
20	M8	8	M22x1.5	27	1/8G	24	20	111.5	67	7	2
25	M10x1.25	10	M22x1.5	30	1/8G	28	22	118.5	68	9	22

MH

DOUBLE ACTING - CUSHIONED - MAGNETIC



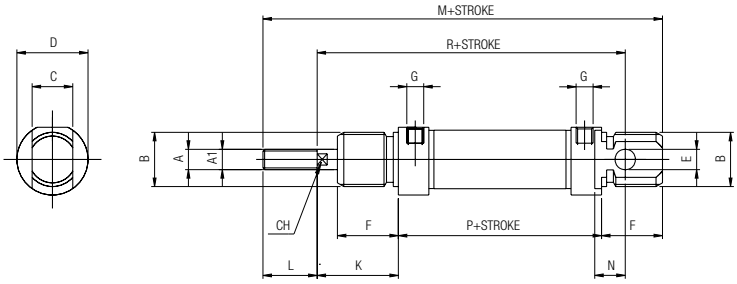

Ø	A	A1	B	C	D	E	F	G	K	L	M	N	P	R	CH
16	M6	6	M16x1.5	12	21	6	18	M5	22	16	109	9	53	82	5
20	M8	8	M22x1.5	16	27	8	20	1/8G	24	20	131	12	67	95	7
25	M10x1.25	10	M22x1.5	16	30	8	22	1/8G	28	22	140	12	68	104	9

MJ

DOUBLE ACTING - MAGNETIC WITH DOUBLE ROD END



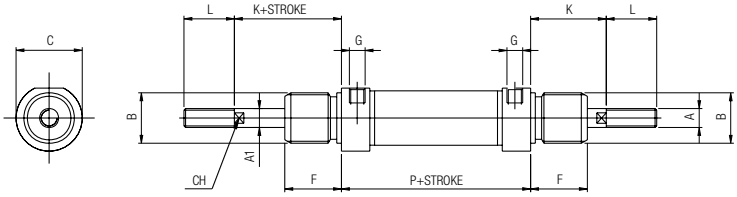

Ø	A	A1	B	C	F	G	K	L	P	CH
16	M6	6	M16x1.5	19	18	M5	22	16	53	5
20	M8	8	M22x1.5	27	20	1/8G	24	20	67	7
25	M10x1.25	10	M22x1.5	30	22	1/8G	28	22	68	9

ML

DOUBLE ACTING - CUSHIONED - MAGNETIC WITH DOUBLE ROD END



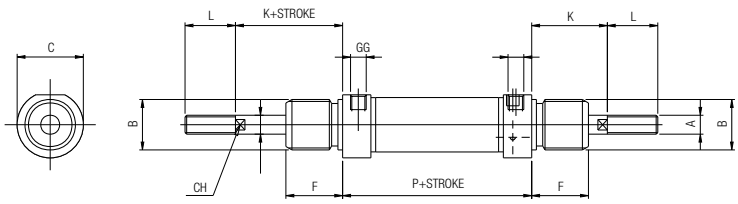

Ø	A	A1	B	C	F	G	K	L	P	CH
16	M6	6	M16x1.5	21	18	M5	22	16	53	5
20	M8	8	M22x1.5	27	20	1/8G	24	20	67	7
25	M10x1.25	10	M22x1.5	30	22	1/8G	28	22	68	9

MHL

PISTON ROD LOCK



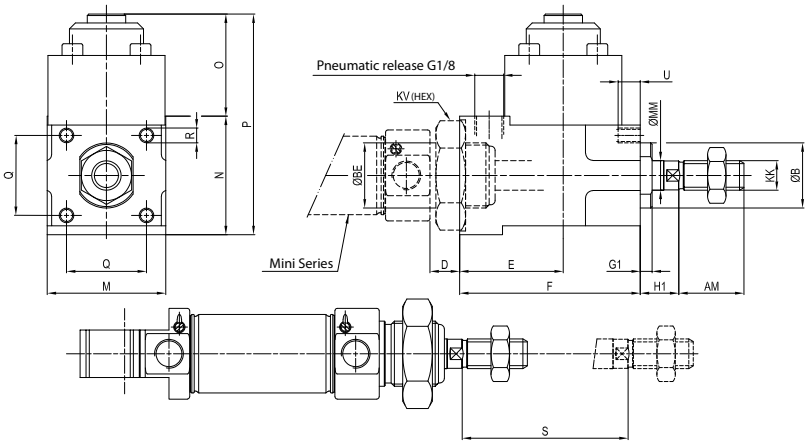

Ø	AM	B	BE	D	E	F	G1	H1	KK	KV	M	MM	N	O	P	Q	R	S	U
16	16	16	M16x1.5	10	35	61	1.5	7	M6x1	24	40	6	40	34.5	74.5	27	M5	55	7.5
20	20	22	M22x1.5	10	35	61	4	9	M8x1.25	32	40	8	40	34.5	74.5	27	M5	55	7.5
25	22	22	M22x1.5	10	35	61	4	13	M10x1.25	32	40	10	40	34.5	74.5	27	M5	55	7.5

ISO 6432 Mounting Accessories

UL1N

PISTON ROD LOCK



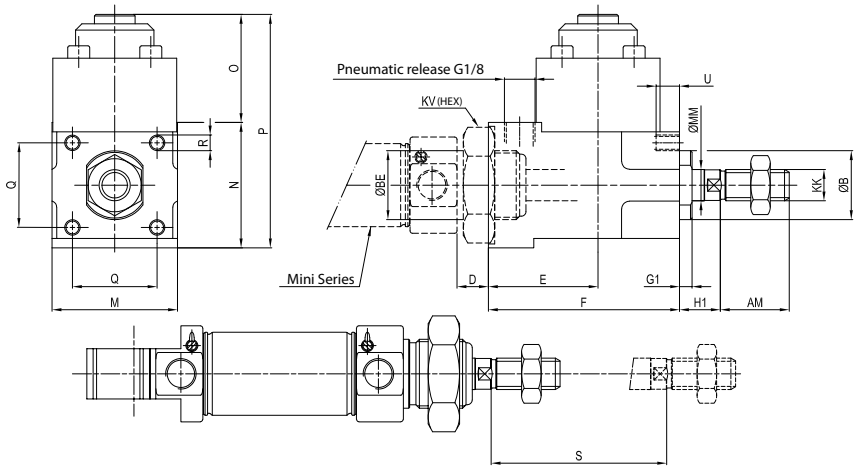

Code	Ø	AM	B	BE	D	E	F	G1	H1	KK	KV	M	MM	N	O	P	Q	R	S	U
UL1N 016 06	16	16	16	M16 X 1.5	10	35	61	1.5	7	M6 X 1	24	40	6	40	34.5	74.5	27	M5	55	7.5
UL1N 020 08	20	20	22	M22 X 1.5	10	35	61	4	9	M8 X 1.25	32	40	8	40	34.5	74.5	27	M5	55	7.5
UL1N 025 10	25	22	22	M22 X 1.5	10	35	61	4	13	M10 X 1.25	32	40	10	40	34.5	74.5	27	M5	55	7.5

MFL

FLANGE



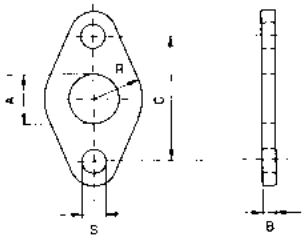

MATERIAL: Steel

Code	Ø	A	B	C	R	S
MFL 008	8-10	12	3	30	9	4.5
MFL 012	12-16	16	4	40	13	5.5
MFL 020	20-25	22	5	50	19	6.6

MPD

FOOT



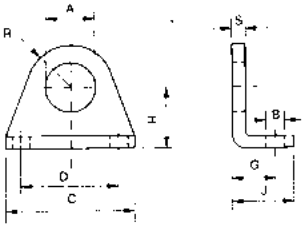

MATERIAL: Steel

Code	Ø	A	B	C	D	G	H	J	R	S
MPD 008	8-10	12	4.5	35	25	11	16	16	10	3
MPD 012	12-16	16	5.5	42	32	14	20	20	13.5	4
MPD 020	20-25	22	6.6	54	40	17	25	25	18	5

MCC

CLEVIS BRACKET WITH PIN



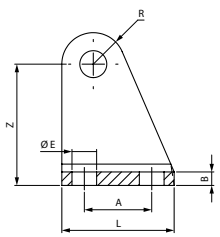

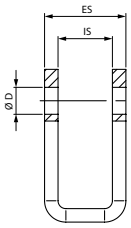

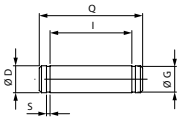

MATERIAL: Steel

Code	Ø	A	B	R	L	Z	IS	ES	S	I	Q	ØE	ØD	ØG
MCC 008	8-10	12.5	2.5	5	22	24	8.1	13	0.8	14	18	4.5	4	2.3
MCC 012	12-16	15	3	7	25	27	12	18	0.8	19	24	5.5	6	4
MCC 020	20-25	20	4	10	32	30	16	24	0.9	25	30	6.5	8	7

DA

MOUNTING NUT



ROD JAM NUT



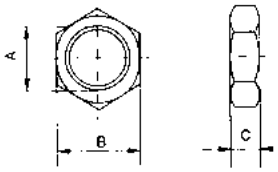

Code	A	B	C
0DA00 00 51 D5 ZI	M12x1.25	19	7
0DA00 00 51 E3 ZI	M16x1.5	22	6
0DA00 00 51 F6 ZI	M22x1.5	27	8

MATERIAL: Steel

Code	A	B	C
0DA00 00 51 B1 ZI	M4	7	3.2
0DA00 00 51 B8 ZI	M6	10	5
0DA00 00 51 C3 ZI	M8x1.25	13	6.5
0DA00 00 51 C9 ZI	M10x1.25	17	8

FC

ROD CLEVIS WITH LOCKABLE PIN



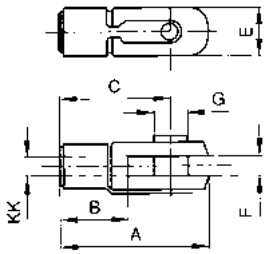

MATERIAL: Steel

Code	KK	A	B	C	E	F	G
FC 008	M4	21	8	16	8	4	4
FC 012	M6	31	12	24	12	6	6
FC 020	M8	42	16	32	16	8	8
FC 025	M10x1.25	52	20	40	20	10	10

TF

SELF-LUBRICATING SPHERICAL ROD EYE



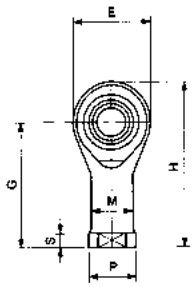

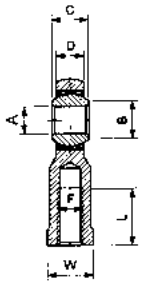

- MATERIAL: Steel
- ■ MATERIAL: Stainless Steel

Code ●	Code ■	F	A	B	C	Ø Sphere	D	E	G	H	L	M	P	S	W	Radial load Dynamic	Radial load Static	Weight
			H7	0	0 -0.13		± 0.13	± 0.5	± 0.5		± 0.7	± 0.7	± 0.5	+ 0.2 - 0.7	± 0.25	kg	kg	g
TF 008	TFI 008	M4x0.7	5	7.7	8	11.11	6	18	27	36	10	9	11	4	9	-	-	-
TF 012	TFI 012	M6x1	6	8.9	9	12.7	6.75	20	30	40	9	10	13	5	11	470	1.100	19
TF 020	TFI 020	M8x1.25	8	10.4	12	15.88	9	24	36	48	12	12.5	16	5	14	780	1.900	36
TF 025	TFI 025	M10x1.25	10	12.9	14	19.05	10.5	28	43	57	15	15	19	6.5	17	1.200	3.100	88