AIGNEP

## Actuator Series

Cartridge Cylinders
Ø 6-16 mm



**CA - CAF Series**
Pg. 20.3

Mini Cylinders ISO 6432
Ø 8-25 mm



**Mini Series**
Pg. 20.5

Mini Stainless Steel Cylinders
ISO 6432 Ø 16-25 mm



**Mini Stainless Steel Series**
Pg. 20.13

Limited Space
Ø 32-63 mm



**A95 Series**
Pg. 20.16

Compact Cylinders
Ø 12-100 mm



**Q Series**
Pg. 20.23

ISO 15552 Cylinders
Ø 32-125 mm



**L Series**
Pg. 20.36

ISO 6431 Cylinders
Ø 160-320 mm



**E Series**
Pg. 20.45

Stainless Steel ISO 15552 Cylinders
Ø 32-125 mm



**V Series**
Pg. 20.47

Twin Rod Cylinders
Ø 32-100 mm



**NHA Series**
Pg. 20.50

Compact Cylinders ISO 21287
Ø 20-100 mm



**W Series**
Pg. 20.54

Cylinder Accessories
ISO 6431 - ISO 15552 - ISO 21287



**Accessories**
Pg. 20.62

Magnetic Position Sensing Switches



**Sensors**
Pg. 20.72

## Rodless Actuator Series

Rodless Cylinders Standard Version



**S1 Series**
Pg. 20.82

Rodless Cylinder with Integrated Guides in Technopolymer



**S5 Series**
Pg. 20.91

Click here to view the Actuator Series on our Website

AIGNEP

AIGNEP

# PNEUMATIC ACTUATORS




# Actuator Series

P.A.

## SERIES L - ISO 15552 / 6431




- *Light weight*
- *Low friction*
- *Clean design*
- *Adjustable cushion*
- *Long lasting quality*
- *Multiple versions for every application*
- *Aluminum piston*

## SERIES T

Ø 32÷125

**Series T** Aluminum profile with tie rods.



## TECHNICAL CHARACTERISTICS

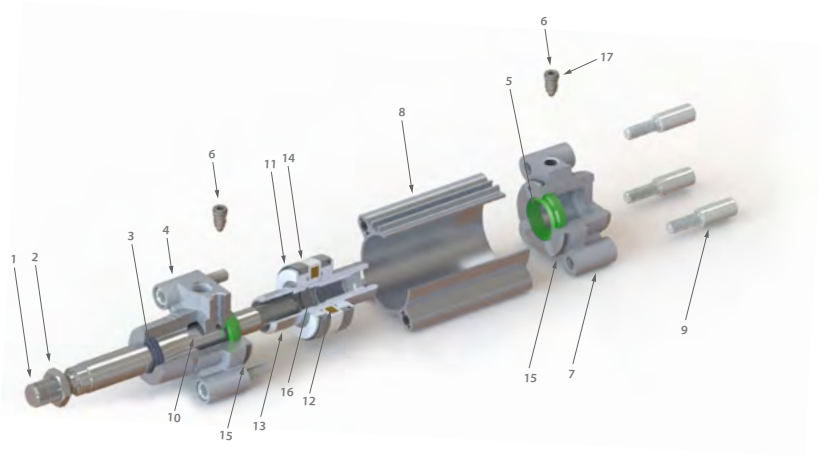




### Component Parts and Materials

1 Chrome-plated steel C40 piston rod
2 Zinc-plated steel nut
3 PU rod seal
4 Aluminum front head
5 NBR cushion seal
6 Zinc-plated steel cushion screw
7 Aluminum rear head
8 Anodized aluminum cylinder profile
9 Zinc-plated screw
10 KU bushing
11 NBR piston seals
12 Plastoferrite magnet
13 Aluminum piston
14 Guide
15 NBR O-ring (front head)
16 NBR O-ring (piston)
17 NBR O-ring (cushion screw)

### Reference Standard

1907/2006 REACH
2011/65/CE RoHS
PED 2014/68/UE
SILICON FREE
ATEX 2014/34/UE

### Recommended Sensors

**DT**

### Pressures

14.5 psi (1 bar / 0.1 MPa)
145 psi (10 bar / 1 MPa)
**Starting pressure: 4.35 psi (0.3 bar /0.03 MPa)**

### Temperatures

32 °F ~ 176 °F
0 °C ~ 80 °C (- 4 °F / -20 °C with dry air)

### Media

Filtered and lubricated compressed air as well as non lubricated air.

### Functions

Single acting magnetic or non-magnetic. Double acting single or double end rod, magnetic or non-magnetic, cushioned or non-cushioned and tandem.

### Bores

**from 32 to 125 mm**

### Standard Strokes

**from 25 to 1000 mm**
Strokes on demand: up to 2700 mm

## FORCES, SPRING LOADS, AND AIR CONSUMPTION

SEE PG. 20.34-20.35

| Series | Execution | Ø mm | Stroke | Version | Choices |
|---|---|---|---|---|---|
| L H | | 0 3 2 | 0 0 2 5 | | |

- ● LH Double acting - cushioned - magnetic
- ▲ LB Single acting - magnetic
- ● LL Double acting - cushioned - magnetic with double rod end

- = Male rod
- L Piston Rod Lock
- T Tandem Common Rod
- D Tandem Independent Rod
- C Opposite Independent Rod
- K Opposite Independent Rod

032
040
050
063
080
100
125

0025
0040
0050
0060
0075
0080
0100
0125
0150
0160
0200
0250
0300
0320
0350
0400
0450
0500
0600
0700
0800
0900
1000

Intermediate or higher strokes are available upon request Maximum stroke 2700 mm.

- = Standard
- T Tie rods

- = Standard NBR
- PU Polyurethane
- F -40° version
- VS Only rod seals in FKM
- IS Stainless steel rod
- V All FKM seals
- W Water and chemical version
- R Metal scraper (NBR)
- IVR Corrosion resistant and chemical agents compatible

| Ø mm | Strokes mm | | | | | | | | | | | | | | | | | | | | | | |
|---|---|---|---|---|---|---|---|---|---|---|---|---|---|---|---|---|---|---|---|---|---|---|---|
| | 25 | 40 | 50 | 60 | 75 | 80 | 100 | 125 | 150 | 160 | 200 | 250 | 300 | 320 | 350 | 400 | 450 | 500 | 600 | 700 | 800 | 900 | 1000 |
| 32 | ▲● | ▲● | ▲● | ▲● | ▲● | ▲● | ▲● | ● | ● | ● | ● | ● | ● | ● | ● | ● | ● | ● | ● | ● | ● | ● | ● |
| 40 | ▲● | ▲● | ▲● | ▲● | ▲● | ▲● | ▲● | ● | ● | ● | ● | ● | ● | ● | ● | ● | ● | ● | ● | ● | ● | ● | ● |
| 50 | ▲● | ▲● | ▲● | ▲● | ▲● | ▲● | ▲● | ● | ● | ● | ● | ● | ● | ● | ● | ● | ● | ● | ● | ● | ● | ● | ● |
| 63 | ▲● | ▲● | ▲● | ▲● | ▲● | ▲● | ▲● | ● | ● | ● | ● | ● | ● | ● | ● | ● | ● | ● | ● | ● | ● | ● | ● |
| 80 | ▲● | ▲● | ▲● | ▲● | ▲● | ▲● | ▲● | ● | ● | ● | ● | ● | ● | ● | ● | ● | ● | ● | ● | ● | ● | ● | ● |
| 100 | ▲● | ▲● | ▲● | ▲● | ▲● | ▲● | ▲● | ● | ● | ● | ● | ● | ● | ● | ● | ● | ● | ● | ● | ● | ● | ● | ● |
| 125 | ● | ● | ● | ● | ● | ● | ● | ● | ● | ● | ● | ● | ● | ● | ● | ● | ● | ● | ● | ● | ● | ● | ● |

## MOST POPULAR VERSIONS

L H □ 0 3 2 0 0 2 5

STANDARD AUTOMATION



+14 / +176 °F (-10 / +80 °C)
NBR SEALS - LOW FRICTION

L H □ 0 3 2 0 0 2 5 P U

LONG LIFE



-4 / +176 °F (-20 / +80 °C)
PU SEALS

L H □ 0 3 2 0 0 2 5 V

HIGH TEMPERATURE AND CHEMICAL COMPATIBLE



+14 / +302 °F (-10 / +150 °C)
FKM SEALS

L H □ 0 3 2 0 0 2 5 I S

STAINLESS STEEL ROD



+14 / +176 °F (-10 / +80 °C)
NBR SEALS - LOW FRICTION
ROD: AISI 303

L H □ 0 3 2 0 0 2 5 F

LOW TEMPERATURES



-40 / +176 °F (-40 / +80 °C)
PU SEALS

L H □ 0 3 2 0 0 2 5 F R

LOW TEMPERATURES WITH METAL SCRAPER



-22 / +176 °F (-30 / +80 °C)
NBR SEALS
METAL SCRAPER

L H □ 0 3 2 0 0 2 5 W

WATER AND CHEMICAL WASHING RESISTANT



+14 / +140 °F (-10 / +60 °C)
PU SEALS - WATERPROOF
ROD: AISI 303
SPECIAL PAINTING

L H □ 0 3 2 0 0 2 5 I V R

CORROSION RESISTANT AND CHEMICAL AGENTS COMPATIBLE



+14 / +302 °F (-10 / +150 °C)
FKM SEALS
ROD: AISI 303
SPECIAL PAINTING
METAL SCRAPER

# LH

## DOUBLE ACTING - CUSHIONED - MAGNETIC

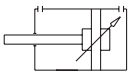



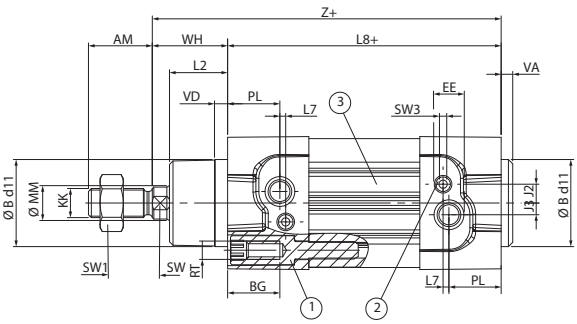


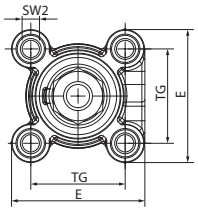


+ = Add Stroke

| Ø | ØB d11 | VD | VA | L2 | WH | Ømm | SW | KK | AM | SW1 | Z | L8 | BG | RT | SW2 | E | TG | EE | PL | J3 | J2 | L7 | SW3 |
|---|---|---|---|---|---|---|---|---|---|---|---|---|---|---|---|---|---|---|---|---|---|---|---|
| **32** | 30 | 4.5 | 4 | 16 | 26 | 12 | 10 | M10X1.25 | 22 | 17 | 120 | 94 | 18 | M6 | 6 | 46 | 32.5 | G1/8 | 18 | 4 | 6.5 | 2 | 2.5 |
| **40** | 35 | 4.5 | 4 | 20 | 30 | 16 | 13 | M12X1.25 | 24 | 19 | 135 | 105 | 18 | M6 | 6 | 54 | 38 | G1/4 | 17.5 | 3.5 | 8 | 5.8 | 2.5 |
| **50** | 40 | 4.5 | 4 | 25 | 37 | 20 | 17 | M16X1.5 | 32 | 22 | 143 | 106 | 20 | M8 | 8 | 64 | 46.5 | G1/4 | 20.5 | 7 | 10 | 2 | 4 |
| **63** | 45 | 15 | 4 | 26 | 37 | 20 | 17 | M16X1.5 | 32 | 22 | 158 | 121 | 20 | M8 | 8 | 74 | 56.5 | G3/8 | 22 | 11 | 8.5 | 4 | 4 |
| **80** | 45 | 16 | 4 | 32 | 46 | 25 | 22 | M20X1.5 | 40 | 30 | 174 | 128 | 19 | M10 | 6 | 94 | 72 | G3/8 | 22 | 11 | 8.5 | 4 | 4 |
| **100** | 55 | 6.1 | 4 | 35 | 51.5 | 25 | 22 | M20X1.5 | 40 | 30 | 189.5 | 138 | 19 | M10 | 6 | 111 | 89 | G1/2 | 26 | 9 | 12.5 | 5 | 4 |
| **125** | 60 | 20.5 | 6 | 45 | 65 | 32 | 27 | M27X2 | 54 | 41 | 225 | 160 | 21 | M12 | 8 | 135 | 110 | G1/2 | 30 | 9 | 12.5 | 2.5 | 4 |

# LL

## DOUBLE ACTING - CUSHIONED - MAGNETIC WITH DOUBLE ROD END

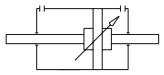



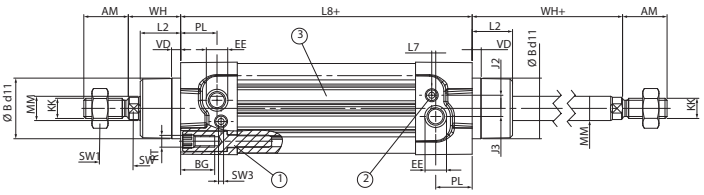


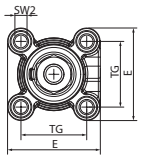


+ = Add Stroke

| Ø | ØB d11 | VD | VA | L2 | WH | Ømm | SW | KK | AM | SW1 | Z | L8 | BG | RT | SW2 | E | TG | EE | PL | J3 | J2 | L7 | SW3 |
|---|---|---|---|---|---|---|---|---|---|---|---|---|---|---|---|---|---|---|---|---|---|---|---|
| **32** | 30 | 4.5 | 4 | 16 | 26 | 12 | 10 | M10X1.25 | 22 | 17 | 120 | 94 | 18 | M6 | 6 | 46 | 32.5 | G1/8 | 18 | 4 | 6.5 | 2 | 2.5 |
| **40** | 35 | 4.5 | 4 | 20 | 30 | 16 | 13 | M12X1.25 | 24 | 19 | 135 | 105 | 18 | M6 | 6 | 54 | 38 | G1/4 | 17.5 | 3.5 | 8 | 5.8 | 2.5 |
| **50** | 40 | 4.5 | 4 | 25 | 37 | 20 | 17 | M16X1.5 | 32 | 22 | 143 | 106 | 20 | M8 | 8 | 64 | 46.5 | G1/4 | 20.5 | 7 | 10 | 2 | 4 |
| **63** | 45 | 15 | 4 | 26 | 37 | 20 | 17 | M16X1.5 | 32 | 22 | 158 | 121 | 20 | M8 | 8 | 74 | 56.5 | G3/8 | 22 | 11 | 8.5 | 4 | 4 |
| **80** | 45 | 16 | 4 | 32 | 46 | 25 | 22 | M20X1.5 | 40 | 30 | 174 | 128 | 19 | M10 | 6 | 94 | 72 | G3/8 | 22 | 11 | 8.5 | 4 | 4 |
| **100** | 55 | 6.1 | 4 | 35 | 51.5 | 25 | 22 | M20X1.5 | 40 | 30 | 189.5 | 138 | 19 | M10 | 6 | 111 | 89 | G1/2 | 26 | 9 | 12.5 | 5 | 4 |
| **125** | 60 | 20.5 | 6 | 45 | 65 | 32 | 27 | M27X2 | 54 | 41 | 225 | 160 | 21 | M12 | 8 | 135 | 110 | G1/2 | 30 | 9 | 12.5 | 2.5 | 4 |

**KEY**

① = Socket head screw with female thread for mounting attachments.

② = Adjustment screw for adjustable end-position cushioning.

③ = Slot for proximity sensor.

# LB

## SINGLE ACTING - MAGNETIC



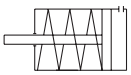

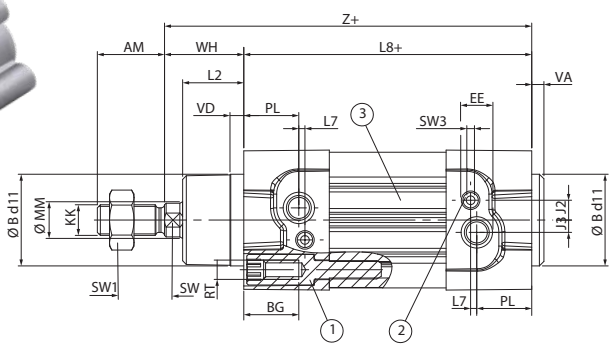


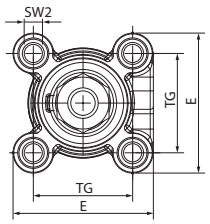


+ = Add Stroke

| Ø | ØB d11 | VD | VA | L2 | WH | Ømm | SW | KK | AM | SW1 | Z | L8 | BG | RT | SW2 | E | TG | EE | PL | J3 | J2 | L7 | SW3 |
|---|---|---|---|---|---|---|---|---|---|---|---|---|---|---|---|---|---|---|---|---|---|---|---|
| **32** | 30 | 4.5 | 4 | 16 | 26 | 12 | 10 | M10X1.25 | 22 | 17 | 145 | 119 | 18 | M6 | 6 | 46 | 32.5 | G1/8 | 18 | 4 | 6.5 | 2 | 2.5 |
| **40** | 35 | 4.5 | 4 | 20 | 30 | 16 | 13 | M12X1.25 | 24 | 19 | 160 | 130 | 18 | M6 | 6 | 54 | 38 | G1/4 | 17.5 | 3.5 | 8 | 5.8 | 2.5 |
| **50** | 40 | 4.5 | 4 | 25 | 37 | 20 | 17 | M16X1.5 | 32 | 22 | 168 | 131 | 20 | M8 | 8 | 64 | 46.5 | G1/4 | 20.5 | 7 | 10 | 2 | 4 |
| **63** | 45 | 15 | 4 | 26 | 37 | 20 | 17 | M16X1.5 | 32 | 22 | 183 | 146 | 20 | M8 | 8 | 74 | 56.5 | G3/8 | 22 | 8 | 8.5 | 4 | 4 |
| **80** | 45 | 16 | 4 | 32 | 46 | 25 | 22 | M20X1.5 | 40 | 30 | 199 | 153 | 19 | M10 | 6 | 94 | 72 | G3/8 | 22 | 11 | 8.5 | 4 | 4 |
| **100** | 55 | 6.1 | 4 | 35 | 51.5 | 25 | 22 | M20X1.5 | 40 | 30 | 214.5 | 163 | 19 | M10 | 6 | 111 | 89 | G1/2 | 26 | 9 | 12.5 | 5 | 4 |

KEY

① = Socket head screw with female thread for mounting attachments.

② = Adjustment screw for adjustable end-position cushioning.

③ = Slot for proximity sensor.

# CYLINDER ISO 15552 / 6431 WITH PISTON ROD LOCK

## LHL

**DOUBLE ACTING CUSHIONED MAGNETIC WITH PISTON ROD LOCK**



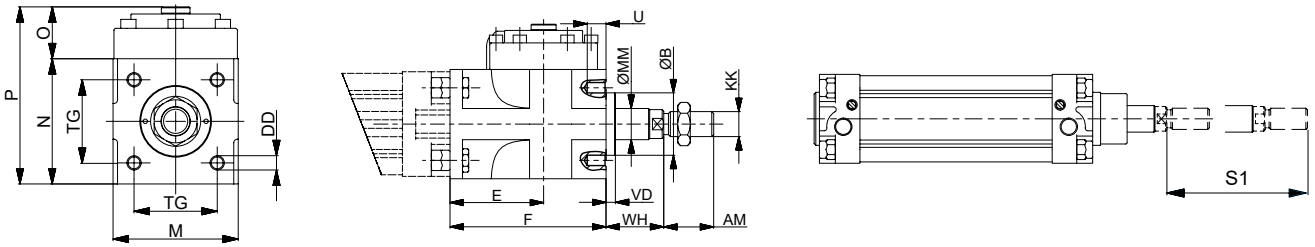


*+ = Add Stroke*

| Code | Ø | Ø Rod (mm) | AM | B | DD | E | F | H1 | KK | M | MM | N | O | P | S1 | TG | U | VD | WH |
|---|---|---|---|---|---|---|---|---|---|---|---|---|---|---|---|---|---|---|---|
| LHL 032 0000 | 32 | 12 | 22 | 30 | M6 | 54.5 | 84 | 16 | M10 x 1.25 | 50 | 12 | 50 | 29.5 | 79.5 | 85 | 32.5 | 10 | 6 | 26 |
| LHL 040 0000 | 40 | 16 | 24 | 35 | M6 | 58 | 90 | 15 | M12 x 1.25 | 58 | 16 | 58 | 29.5 | 87.5 | 90 | 38 | 9 | 6 | 30 |
| LHL 050 0000 | 50 | 20 | 32 | 40 | M8 | 60 | 100 | 17 | M16 x 1.5 | 70 | 20 | 70 | 29 | 99 | 100 | 46.5 | 10 | 6 | 37 |
| LHL 063 0000 | 63 | 20 | 32 | 45 | M8 | 65 | 110 | 17 | M16 x 1.5 | 85 | 20 | 85 | 37 | 122 | 110 | 56.5 | 13 | 6 | 37 |
| LHL 080 0000 | 80 | 25 | 40 | 45 | M10 | 75 | 125 | 21 | M20 x 1.5 | 100 | 25 | 100 | 40.5 | 140.5 | 125 | 72 | 16 | 8 | 46 |
| LHL 100 0000 | 100 | 25 | 40 | 55 | M10 | 90 | 152 | 26 | M20 x 1.5 | 116 | 25 | 116 | 59 | 179 | 150 | 89 | 18 | 8 | 51 |
| LHL 125 0000 | 125 | 32 | 54 | 60 | M12 | 112.5 | 185 | 35 | M27 x 2 | 145 | 32 | 145 | 62 | 207 | 185 | 110 | 22 | 9.5 | 65 |

## UL1N

**PISTON ROD LOCK**



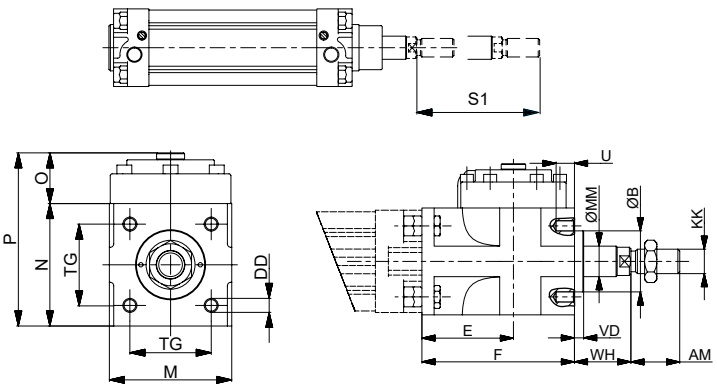


| Code | Ø | AM | B | DD | E | F | H1 | KK | M | MM | N | O | P | S1 | TG | U | VD | WH |
|---|---|---|---|---|---|---|---|---|---|---|---|---|---|---|---|---|---|---|
| UL1N 032 12 | 32 | 22 | 30 | M6 | 54.5 | 84 | 16 | M10 X 1.25 | 50 | 12 | 50 | 29.5 | 79.5 | 85 | 32.5 | 10 | 6 | 26 |
| UL1N 040 16 | 40 | 24 | 35 | M6 | 58 | 90 | 15 | M12 X 1.25 | 58 | 16 | 58 | 29.5 | 87.5 | 90 | 38 | 9 | 6 | 30 |
| UL1N 050 20 | 50 | 32 | 40 | M8 | 60 | 100 | 17 | M16 X 1.5 | 70 | 20 | 70 | 29 | 99 | 100 | 46.5 | 10 | 6 | 37 |
| UL1N 063 20 | 63 | 32 | 45 | M8 | 65 | 110 | 17 | M16 X 1.5 | 85 | 20 | 85 | 37 | 122 | 110 | 56.5 | 13 | 6 | 37 |
| UL1N 080 25 | 80 | 40 | 45 | M10 | 75 | 125 | 21 | M20 X 1.5 | 100 | 25 | 100 | 40.5 | 140.5 | 125 | 72 | 16 | 8 | 46 |
| UL1N 100 25 | 100 | 40 | 55 | M10 | 90 | 152 | 26 | M20 X 1.5 | 116 | 25 | 116 | 59 | 179 | 150 | 89 | 18 | 8 | 51 |
| UL1N 125 32 | 125 | 54 | 60 | M12 | 112.5 | 185 | 35 | M27 X 2 | 145 | 32 | 145 | 62 | 207 | 185 | 110 | 22 | 9.5 | 65 |

# CYLINDER ISO 15552 / 6431 - TANDEM AND OPPOSITE

## LHT

**TANDEM DOUBLE-ACTING MAGNETIC COMMON ROD**

## LHD

**TANDEM DOUBLE-ACTING MAGNETIC INDEPENDENT RODS**




### LHT

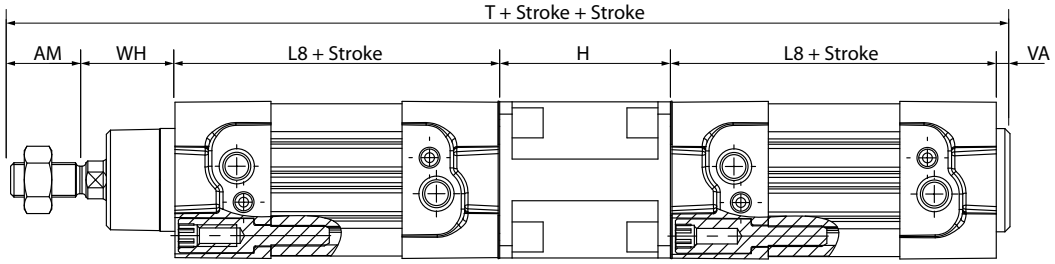


### LHD

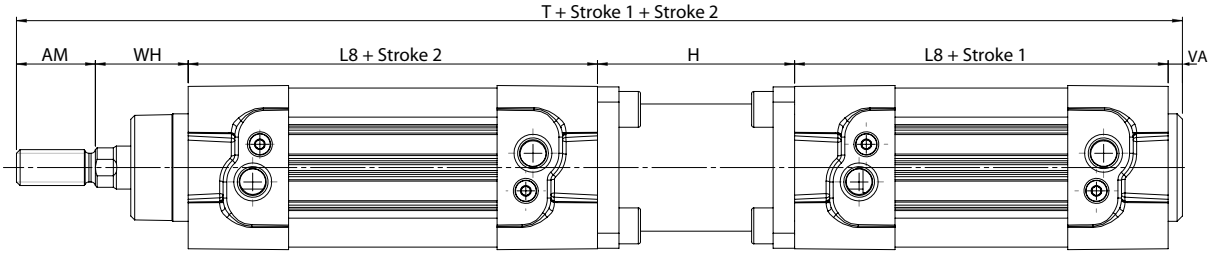


| Ø | VA | WH | AM | L8 | H | T |
|---|---|---|---|---|---|---|
| 32 | 4 | 26 | 22 | 94 | 55 | 295 |
| 40 | 4 | 30 | 24 | 105 | 55 | 323 |
| 50 | 4 | 37 | 32 | 106 | 68 | 353 |
| 63 | 4 | 37 | 32 | 121 | 68 | 383 |
| 80 | 4 | 46 | 40 | 128 | 92 | 438 |
| 100 | 4 | 51.5 | 40 | 138 | 92 | 463.5 |
| 125 | 6 | 65 | 54 | 160 | 120 | 565 |

*For further information please contact our technical department.*

*For missing dimensions please refer to the LH series.*

# LV

**FRONTAL OPPOSITE WITH COMMON ROD**

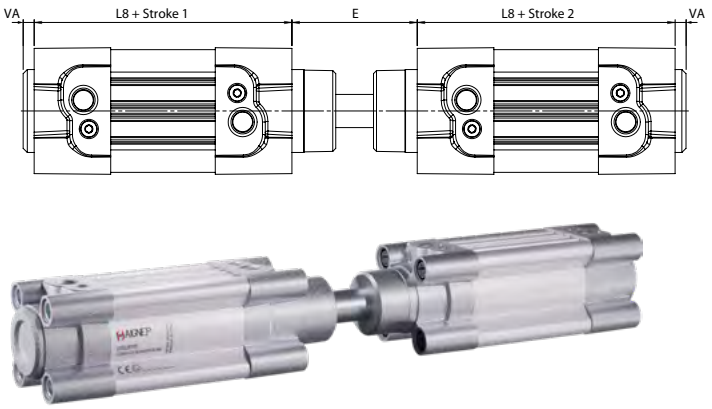


# LHC

**OPPOSITE INDEPENDENT RODS**

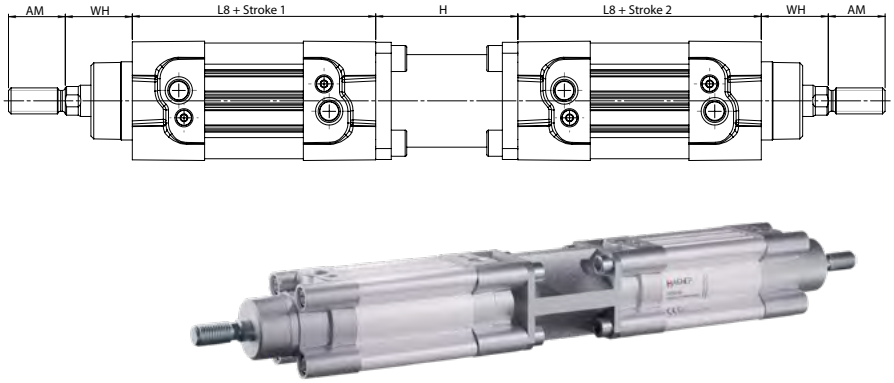


# LHK

**OPPOSITE INDEPENDENT RODS**

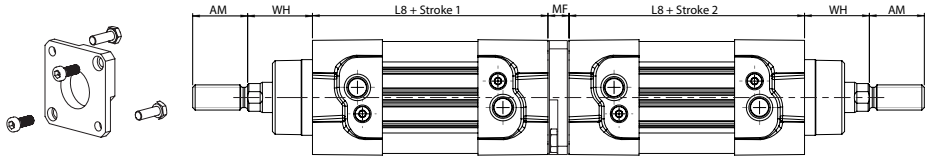


| Ø | VA | WH | AM | L8 | H | E | MF |
|---|---|---|---|---|---|---|---|
| 32 | 4 | 26 | 22 | 94 | 55 | 46 | 10 |
| 40 | 4 | 30 | 24 | 105 | 55 | 52 | 10 |
| 50 | 4 | 37 | 32 | 106 | 68 | 67 | 15 |
| 63 | 4 | 37 | 32 | 121 | 68 | 67 | 15 |
| 80 | 4 | 46 | 40 | 128 | 92 | 82 | 15 |
| 100 | 4 | 51.5 | 40 | 138 | 92 | 87 | 15 |
| 125 | 6 | 65 | 54 | 160 | 120 | 115 | 15 |

*For further information please contact our technical department.*

*For missing dimensions please refer to the LH series.*

## FORCES, SPRING LOADS, AND AIR CONSUMPTION

Compatible for Series E - V - N - L

### Extend and Retract Forces

| Cylinder | Piston Rod | Piston Area | Operating pressure | | | | | | | | | |
|---|---|---|---|---|---|---|---|---|---|---|---|---|
| Ø | Ø | mm² | bar | | | | | | | | | |
| | | | 1 | 2 | 3 | 4 | 5 | 6 | 7 | 8 | 9 | 10 |
| | | | Output force N | | | | | | | | | |
| 32 | 12 | Extend = 804 | 72 | 144 | 216 | 288 | 360 | 432 | 504 | 576 | 648 | 720 |
| | | Retract = 691 | 62 | 124 | 186 | 248 | 310 | 372 | 434 | 496 | 558 | 620 |
| 40 | 16 | Extend = 1257 | 110 | 220 | 330 | 440 | 550 | 660 | 770 | 880 | 990 | 1100 |
| | | Retract = 1056 | 95 | 190 | 285 | 380 | 475 | 570 | 665 | 760 | 855 | 950 |
| 50 | 20 | Extend = 1963 | 175 | 350 | 525 | 700 | 875 | 1050 | 1225 | 1400 | 1575 | 1750 |
| | | Retract = 1649 | 148 | 296 | 444 | 592 | 740 | 888 | 1036 | 1184 | 1332 | 1480 |
| 63 | 20 | Extend = 3117 | 280 | 560 | 840 | 1120 | 1400 | 1680 | 1960 | 2240 | 2520 | 2800 |
| | | Retract = 2803 | 250 | 500 | 750 | 1000 | 1250 | 1500 | 1750 | 2000 | 2250 | 2500 |
| 80 | 25 | Extend = 5027 | 450 | 900 | 1350 | 1800 | 2250 | 2700 | 3150 | 3600 | 4050 | 4500 |
| | | Retract = 4536 | 405 | 810 | 1215 | 1620 | 2025 | 2430 | 2835 | 3240 | 3645 | 4050 |
| 100 | 25 | Extend = 7854 | 700 | 1400 | 2100 | 2800 | 3500 | 4200 | 4900 | 5650 | 6360 | 7000 |
| | | Retract = 7363 | 660 | 1320 | 1980 | 2640 | 3300 | 3960 | 4620 | 5280 | 5940 | 6600 |
| 125 | 32 | Extend = 12270 | 1104 | 2208 | 3312 | 4416 | 5520 | 6624 | 7728 | 8832 | 9936 | 11040 |
| | | Retract = 11468 | 1032 | 2064 | 3096 | 4128 | 5160 | 6192 | 7224 | 8256 | 9288 | 10320 |
| 160 | 40 | Extend = 20096 | 1774 | 3548 | 5322 | 7097 | 8871 | 10645 | 12419 | 14194 | 15968 | 17742 |
| | | Retract = 18840 | 1663 | 3326 | 4990 | 6653 | 8316 | 9980 | 11643 | 13307 | 14970 | 16633 |
| 200 | 40 | Extend = 31440 | 2772 | 5544 | 8316 | 11089 | 13861 | 16633 | 19406 | 22178 | 24950 | 27723 |
| | | Retract = 30144 | 2661 | 5322 | 7984 | 10645 | 13307 | 15968 | 18629 | 21291 | 23952 | 26614 |
| 250 | 50 | Extend = 48750 | 4331 | 8663 | 12995 | 17326 | 21658 | 25990 | 30322 | 34653 | 38985 | 43317 |
| | | Retract = 46800 | 4158 | 8316 | 12475 | 16663 | 20792 | 24950 | 29109 | 33267 | 37426 | 41584 |
| 320 | 63 | Extend = 78872 | 7097 | 14194 | 21291 | 28388 | 35485 | 42582 | 49679 | 56776 | 63873 | 70971 |
| | | Retract = 76776 | 6822 | 13644 | 20466 | 27288 | 34110 | 40932 | 47754 | 54576 | 61398 | 68220 |

### Spring Loads

| Cylinder | Spring load | Stroke (mm) | | | | |
|---|---|---|---|---|---|---|
| Ø | | 25 | 50 | 75 | 80 | 100 |
| | | | | Output force N | | |
| 32 | Load of spring at rest | 50 | 41 | 33 | 31.5 | 24.5 |
| | Load of compressed spring | 58 | 58 | 58 | 58 | 58 |
| 40 | Load of spring at rest | 52 | 43 | 34 | 32 | 25 |
| | Load of compressed spring | 61 | 61 | 61 | 61 | 61 |
| 50 | Load of spring at rest | 92 | 77 | 64 | 60 | 49 |
| | Load of compressed spring | 110 | 110 | 110 | 110 | 110 |
| 63 | Load of spring at rest | 92 | 77 | 64 | 60 | 49 |
| | Load of compressed spring | 110 | 110 | 110 | 110 | 110 |
| 80 | Load of spring at rest | 117 | 98 | 79 | 75 | 59 |
| | Load of compressed spring | 138 | 138 | 138 | 138 | 138 |
| 100 | Load of spring at rest | 117 | 98 | 79 | 75 | 59 |
| | Load of compressed spring | 138 | 138 | 138 | 138 | 138 |

Air Consumption

| Cylinder | Piston Rod | Piston Area | Operating pressure | | | | | | | | | |
|---|---|---|---|---|---|---|---|---|---|---|---|---|
| Ø | Ø | mm² | bar | | | | | | | | | |
| | | | 1 | 2 | 3 | 4 | 5 | 6 | 7 | 8 | 9 | 10 |
| | | | Air consumption for each 10 mm of stroke Nl | | | | | | | | | |
| 32 | 12 | Extend = 804 | 0.016 | 0.024 | 0.032 | 0.040 | 0.048 | 0.056 | 0.064 | 0.072 | 0.080 | 0.088 |
| | | Retract = 691 | 0.014 | 0.021 | 0.028 | 0.035 | 0.041 | 0.048 | 0.055 | 0.062 | 0.069 | 0.076 |
| 40 | 16 | Extend = 1257 | 0.025 | 0.038 | 0.050 | 0.063 | 0.075 | 0.088 | 0.101 | 0.113 | 0.126 | 0.138 |
| | | Retract = 1056 | 0.021 | 0.032 | 0.042 | 0.053 | 0.063 | 0.074 | 0.084 | 0.095 | 0.106 | 0.116 |
| 50 | 20 | Extend = 1963 | 0.039 | 0.059 | 0.079 | 0.098 | 0.118 | 0.137 | 0.157 | 0.177 | 0.196 | 0.216 |
| | | Retract = 1649 | 0.033 | 0.049 | 0.066 | 0.082 | 0.099 | 0.115 | 0.132 | 0.148 | 0.165 | 0.181 |
| 63 | 20 | Extend = 3117 | 0.062 | 0.094 | 0.125 | 0.156 | 0.187 | 0.218 | 0.249 | 0.281 | 0.312 | 0.343 |
| | | Retract = 2803 | 0.056 | 0.084 | 0.112 | 0.140 | 0.168 | 0.196 | 0.224 | 0.252 | 0.280 | 0.308 |
| 80 | 25 | Extend = 5027 | 0.101 | 0.151 | 0.201 | 0.251 | 0.302 | 0.352 | 0.402 | 0.452 | 0.503 | 0.553 |
| | | Retract = 4536 | 0.091 | 0.136 | 0.181 | 0.227 | 0.272 | 0.318 | 0.363 | 0.408 | 0.454 | 0.499 |
| 100 | 25 | Extend = 7854 | 0.157 | 0.236 | 0.314 | 0.393 | 0.471 | 0.550 | 0.628 | 0.707 | 0.785 | 0.864 |
| | | Retract = 7363 | 0.147 | 0.221 | 0.295 | 0.368 | 0.442 | 0.515 | 0.589 | 0.663 | 0.736 | 0.810 |
| 125 | 32 | Extend = 12270 | 0.245 | 0.368 | 0.491 | 0.614 | 0.736 | 0.859 | 0.982 | 1.104 | 1.227 | 1.350 |
| | | Retract = 11468 | 0.229 | 0.344 | 0.459 | 0.573 | 0.688 | 0.803 | 0.917 | 1.032 | 1.147 | 1.261 |
| 160 | 40 | Extend = 20096 | 0.402 | 0.603 | 0.804 | 1.005 | 1.206 | 1.407 | 1.608 | 1.809 | 2.010 | 2.211 |
| | | Retract = 18840 | 0.377 | 0.565 | 0.754 | 0.942 | 1.130 | 1.319 | 1.507 | 1.1696 | 1.884 | 2.072 |
| 200 | 40 | Extend = 31440 | 0.628 | 0.942 | 1.256 | 1.570 | 1.884 | 2.198 | 2.512 | 2.826 | 3.140 | 3.454 |
| | | Retract = 30144 | 0.603 | 0.904 | 1.206 | 1.507 | 1.809 | 2.110 | 2.412 | 2.713 | 3.014 | 3.316 |
| 250 | 50 | Extend = 48750 | 0.981 | 1.472 | 1.963 | 2.453 | 2.948 | 3.434 | 3.925 | 4.415 | 4.906 | 5.400 |
| | | Retract = 46800 | 0.942 | 1.413 | 1.884 | 2.355 | 2.826 | 3.297 | 3.768 | 4.239 | 4.710 | 5.181 |
| 320 | 63 | Extend = 78872 | 1.610 | 2.411 | 3.215 | 4.020 | 4.820 | 5.626 | 6.430 | 7.234 | 8.038 | 8.843 |
| | | Retract = 76776 | 1.545 | 2.320 | 3.100 | 3.863 | 4.630 | 5.408 | 6.181 | 6.954 | 7.726 | 8.450 |