AIGNEP

## Actuator Series

Cartridge Cylinders
Ø 6-16 mm



**CA - CAF Series**
Pg. 20.3

Mini Cylinders ISO 6432
Ø 8-25 mm



**Mini Series**
Pg. 20.5

Mini Stainless Steel Cylinders
ISO 6432 Ø 16-25 mm



**Mini Stainless Steel Series**
Pg. 20.13

Limited Space
Ø 32-63 mm



**A95 Series**
Pg. 20.16

Compact Cylinders
Ø 12-100 mm



**Q Series**
Pg. 20.23

ISO 15552 Cylinders
Ø 32-125 mm



**L Series**
Pg. 20.36

ISO 6431 Cylinders
Ø 160-320 mm



**E Series**
Pg. 20.45

Stainless Steel ISO 15552 Cylinders
Ø 32-125 mm



**V Series**
Pg. 20.47

Twin Rod Cylinders
Ø 32-100 mm



**NHA Series**
Pg. 20.50

Compact Cylinders ISO 21287
Ø 20-100 mm



**W Series**
Pg. 20.54

Cylinder Accessories
ISO 6431 - ISO 15552 - ISO 21287



**Accessories**
Pg. 20.62

Magnetic Position Sensing Switches



**Sensors**
Pg. 20.72

## Rodless Actuator Series

Rodless Cylinders Standard Version



**S1 Series**
Pg. 20.82

Rodless Cylinder with Integrated Guides in Technopolymer



**S5 Series**
Pg. 20.91

Click here to view the Actuator Series on our Website

AIGNEP

AIGNEP

# PNEUMATIC ACTUATORS




# Actuator Series

P.A.

# CARTRIDGE CYLINDERS

## TECHNICAL CHARACTERISTICS






### Component Parts and Materials

1 Steel plated rod jam nut
2 Brass rod bushing
3 Steel spring
4 303 Stainless steel piston rod
5 Polyurethane rod seal
6 Nickel-plated brass body
7 Zinc plated steel locking screw

### Reference Standard

1907/2006 REACH✓ | 2011/65/CE RoHS | PED 2014/68/UE | SILICON FREE | ATEX 2014/34/UE

### Pressures

29 psi (2 bar / 0.2 MPa)
101.5 psi (7 bar / 0.7 MPa)

### Temperatures

32 °F ~ 176 °F
0 °C ~ 80 °C (- 4 °F / -20 °C with dry air)

### Media

Filtered and lubricated or non-lubricated compressed air

### Functions

Single acting threaded and non-threaded piston rod.

### Bores

**6 - 10 - 16 mm**

### Standard Strokes

**5 - 10 - 15 mm**

### Weight

| Ø | Stroke (mm) | | |
|---|---|---|---|
| mm | 5 | 10 | 15 |
| 6 | 10 g | 12.5 g | 15 g |
| 10 | 27 g | 32 g | 36 g |
| 16 | 71 g | 78 g | 87 g |

| Series | Ø (mm) | Stroke (mm) |
|---|---|---|
| C A F | 0 6 | 0 0 1 0 |
| ▲CA Single acting non-threaded piston rod | 06 | 0005 |
| ▲CAF Single acting threaded piston rod | 10 | 0010 |
| | 16 | 0015 |

| Ø (mm) | Stroke (mm) | | |
|---|---|---|---|
| | 5 | 10 | 15 |
| 6 | ▲ | ▲ | ▲ |
| 10 | ▲ | ▲ | ▲ |
| 16 | ▲ | ▲ | ▲ |

# CA

## SINGLE ACTING - NON-THREADED PISTON ROD

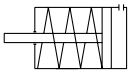



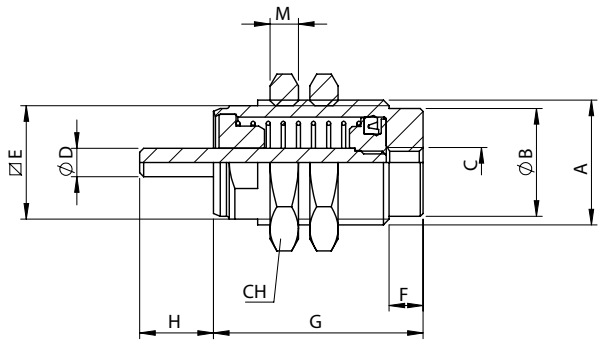


| Ø | A | B | C | D | ØE | F | G Stroke 5 | G Stroke 10 | G Stroke 15 | H | M | CH |
|---|---|---|---|---|---|---|---|---|---|---|---|---|
| 6 | M10x1 | 8.5 | M5 | 3 | 9 | 5 | 19.5 | 26.5 | 33.5 | 8 | 3 | 14 |
| 10 | M15x1.5 | 13 | M5 | 5 | 14 | 5 | 21.5 | 28 | 35 | 10.5 | 4 | 19 |
| 16 | M22x1.5 | 19 | M5 | 5 | 20 | 6 | 24.5 | 30.5 | 37 | 13 | 5 | 27 |

# CAF

## SINGLE-ACTING - THREADED PISTON ROD

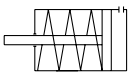



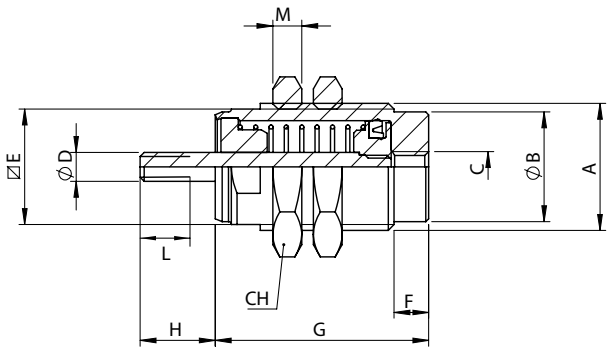


| Ø | A | B | C | D | ØE | F | G Stroke 5 | G Stroke 10 | G Stroke 15 | H | M | CH | L |
|---|---|---|---|---|---|---|---|---|---|---|---|---|---|
| 6 | M10x1 | 8.5 | M5 | M3 | 9 | 5 | 19.5 | 26.5 | 33.5 | 8 | 3 | 14 | 7 |
| 10 | M15x1.5 | 13 | M5 | M4 | 14 | 5 | 21.5 | 28 | 35 | 10.5 | 4 | 19 | 10 |
| 16 | M22x1.5 | 19 | M5 | M5 | 20 | 6 | 24.5 | 30.5 | 37 | 13 | 5 | 27 | 12 |