Valves Series

Solenoid Valves



01V
Pg. 18.3

Inox Solenoid Valves



X1V
Pg. 18.42

Solenoid Valves



07V
Pg. 18.50

Namur Solenoid Valves



08V
Pg. 18.53

Miniature Electropilots U1



AA
Pg. 18.60

Universal Valves G1/8 - G1/4



CL - CM
Pg. 18.67

Rotary Hand Lever Valves



12V
Pg. 18.96

Micro Valves



AI JET
Pg. 18.99

Micro Valves



AI JET2
Pg. 18.104

16mm Valves - Mechanical and Manual Operators



CH
Pg. 18.107

Pedal Valves



AM
Pg. 18.110

FIELDBUS Valves Series

Fieldbus Electropneumatic Valves



16V
Pg. 18.114

Fieldbus Electropneumatic Valves



17V
Pg. 18.121

ISO Valves Series

Valves ISO 5599/1 - Sizes 1 - 2 - 3 - 4



BE
Pg. 18.156

COILS & CONNECTORS Series

Solenoids and Connectors



Coils & Connectors
Pg. 18.169

Click here to view the Valves Series on our Website

AIGNEP

MANUAL, PNEUMATIC, SOLENOID PILOT, FIELDBUS, AND ISO VALVES

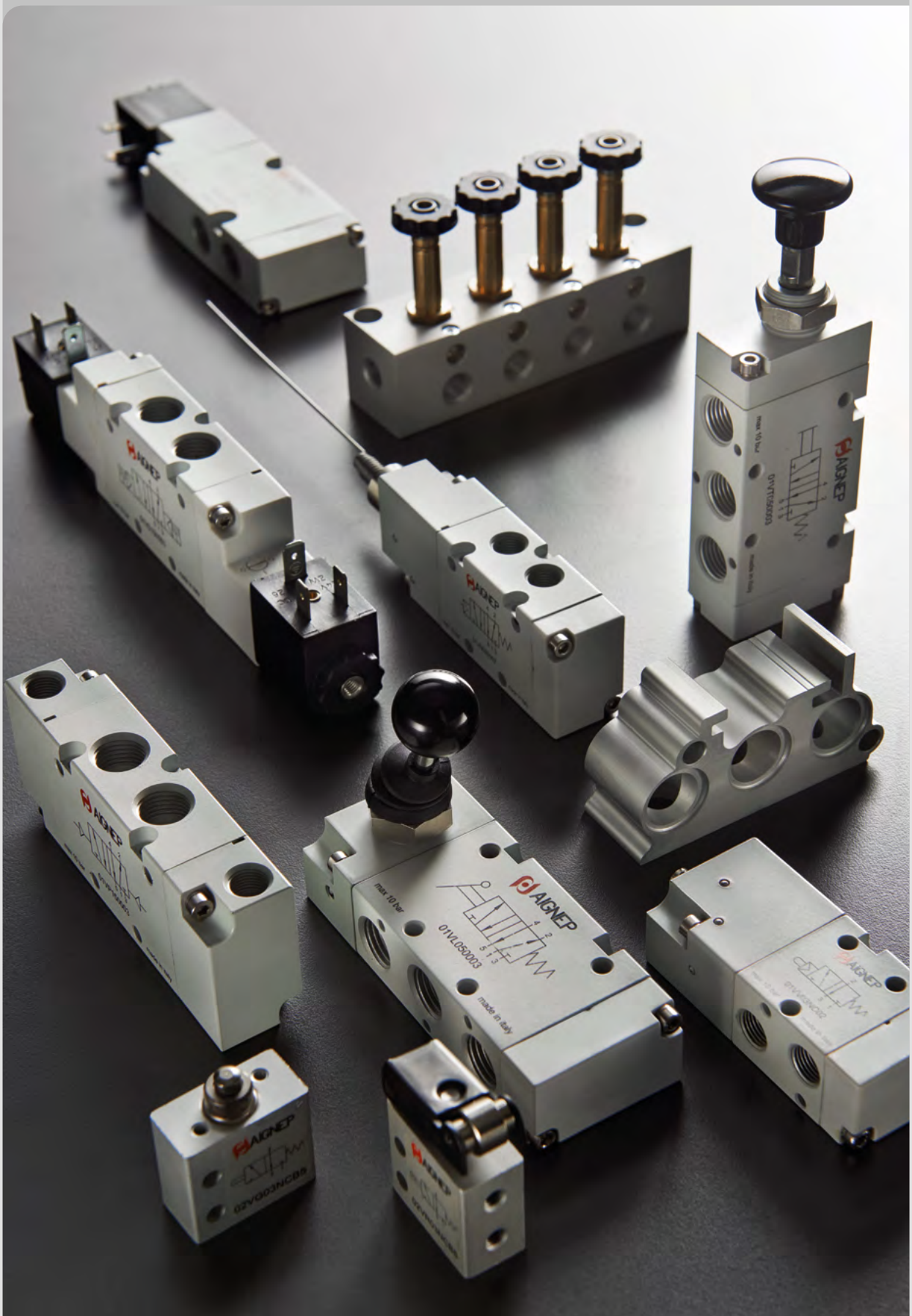

Valves Series

SERIES AM - PNEUMATIC AND SOLENOID FOOT VALVES

AM - pneumatic and solenoid foot valves

- Double poppet system appreciated for its reliability and high flow rate
- Aluminum valve body and pedal lever assuring the max strength
- Available with and without protection (in the latter case the protection is to be realized by the machine builder according to the current rules)
- Available with safety devices to prevent unintentional operations
- Available with pneumatic servo-assistance in case of minimum stress
- Electric foot valves with single or double microswitch complete the foot valve range

Fluid	filtered air 50 µm, with or without lubrication	
Temperature ambient	14 ÷ 158 °F (-10 ÷ 70 °C)	
Temperature fluid	14 ÷ 122 °F (-10 ÷ 50 °C)	
Commutation system	Poppet	
Ways/Positions	2/2 NC, 3/2 NC, 2/2 NO, 3/2 NO, 5/2	
Pressure	Max 145 psi (10 bar)	
Control	pedal	
Return	mechanical spring, peda	
Connections	G1/8	G1/4
Nominal bore (mm)	.091 (2.3)	.315 (8)
Nominal flow rate (Nl/min)	98	800
PNEUMATIC FOOT VALVE		
Valve body	zamak	
Pedal lever	aluminum	
Pedal body and protection	plastic material with steel reinforcement plate	
Seals	oil-resistant and wear-resistant compound	
Spool	aluminum	
SOLENOID FOOT VALVE		
Valve body, lever foot, protection	dielectric plastic material	

Reference standard

II 2G Ex h IIC T5 Gb

II 2D Ex h IIIC T100°C Db



Functioning

Pedal with spring return

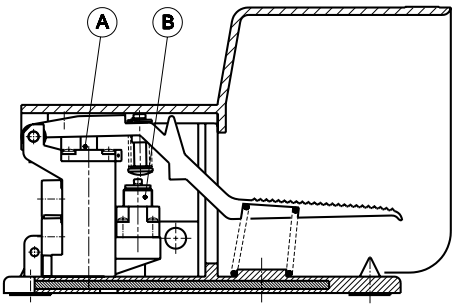

Direct operation A or pneumatic servo-assistance B.

Pedal with two positions (bistable)

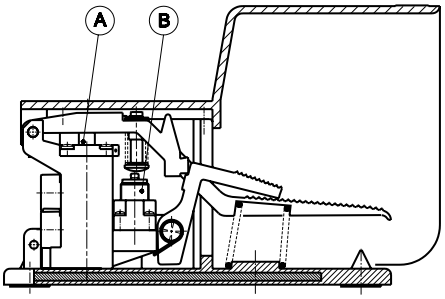

The pedal must be fully depressed.
Releasing the pedal returns it to the starting position.

Pedal with safety device

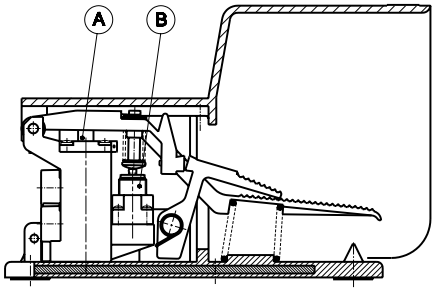

Operation is possible only by pushing both pedals at the same time.
The pedals return to the starting position when released. In this case unintentional operation is avoided.

PNEUMATIC FOOT VALVE WITH PROTECTION



Code	Way	Thread	Riturn	Force N	Weight Kg	
SPRING RETURN						
UAM 5000	3/2 NC	G 1/4	mechanical spring	20	2.76 (1.25)	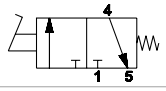
UAM 5001	5/2	G 1/4	mechanical spring	20	3.20 (1.45)	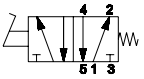
UAM 5002	3/2 NO	G 1/4	mechanical spring	20	2.76 (1.25)	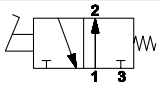
PEDAL BISTABLE						
UAM 5003	3/2 NC	G 1/4	pedal	20	3.02 (1.37)	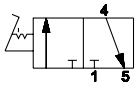
UAM 5004	5/2	G 1/4	pedal	20	3.35 (1.52)	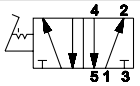
UAM 5005	3/2 NO	G 1/4	pedal	20	3.02 (1.37)	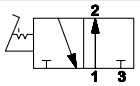
WITH SAFETY CONTROL						
UAM 5011	5/2	G 1/4	mechanical spring	20	3.20 (1.45)	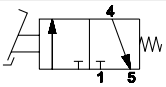
UAM 5012	3/2 NO	G 1/4	mechanical spring	20	2.76 (1.25)	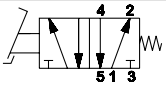
UAM 5015	3/2 NC	G 1/4	mechanical spring	20	2.76 (1.25)	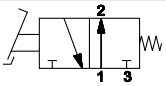
EXTERNAL OFORATION - SPRING RETURN						
UAM 5021	5/2	G 1/4	mechanical spring	20	3.20 (1.45)	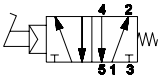
EXTERNAL OFORATION - BISTABLE						
UAM 5031	5/2	G 1/4	mechanical spring	20	3.20 (1.45)	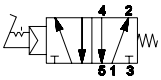
EXTERNAL OFORATION WITH SAFETY CONTROL						
UAM 5041	5/2	G 1/4	mechanical spring	20	3.20 (1.45)	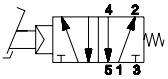

PNEUMATIC PEDAL WITHOUT A PROTECTIVE COVER



Code	Way	Thread	Riturn	Force N	Weight Kg	
SPRING RETURN						
UAM 5000A	3/2 NC	G 1/4	mechanical spring	20	2.76 (1.25)	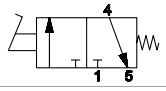
UAM 5001A	5/2	G 1/4	mechanical spring	20	3.20 (1.45)	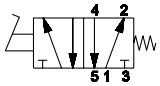
PEDAL BISTABLE						
UAM 5003A	3/2 NC	G 1/4	pedal	20	3.02 (1.37)	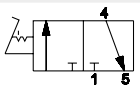
UAM 5004A	5/2	G 1/4	pedal	20	3.35 (1.52)	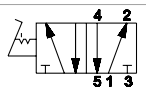

Other versions available on request.

If this version is used, the user must ensure that the necessary safety measures are taken in accordance with current regulations.

PNEUMATIC FOOT VALVE G1/8 WITH PROTECTION



Code	Way	Thread	Riturn	Force N	Weight Kg	
UAM 5043B	2/2 NC	G 1/8	mechanical spring	20	2.12 (0.96)	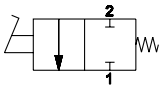
UAM 5043D	2/2 NO	G 1/8	mechanical spring	20	2.12 (0.96)	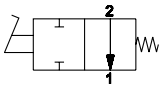
UAM 5043	3/2 NC	G 1/8	mechanical spring	20	2.12 (0.96)	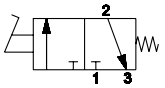
UAM 5043C	3/2 NO	G 1/8	mechanical spring	20	2.12 (0.96)	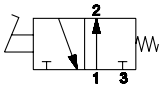

Version without protection available on request

SOLENOID FOOT VALVE



Code	Riturn	Force N	Weight Kg	
UAM 5050	No electrical microswitch	20	1.90 (0.86)	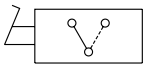
UAM 5051	Electrical microswitch	20	2.03 (0.92)	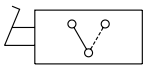
UAM 5052	Double electrical microswitch	20	2.09 (0.95)	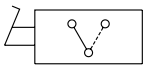

PNEUMATIC FOOT VALVE WITH PROTECTION

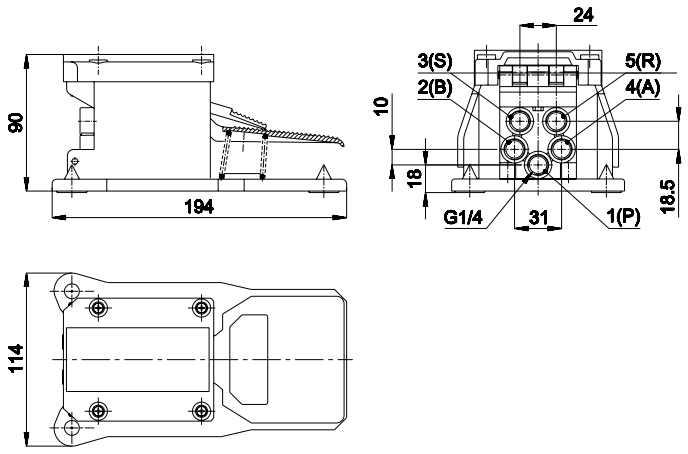

Threaded fittings for various applications:

3/2 NC			3/2 NO			5/2				
A	P	R	B	P	S	A	B	P	R	S
4	1	5	2	1	3	4	2	1	5	3

1 (P) = Supply port
2 - 4 (B-A) = Use
3 -5 (S-R) =Exhaust

PNEUMATIC FOOT VALVE WITH PROTECTION

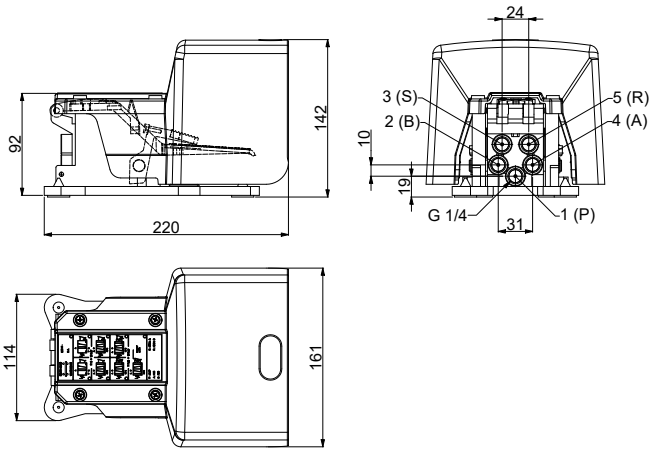

Threaded fittings for various applications:

3/2 NC			3/2 NO			5/2				
A	P	R	B	P	S	A	B	P	R	S
4	1	5	2	1	3	4	2	1	5	3

1 (P) = Supply port
2 - 4 (B-A) = Use
3 -5 (S-R) =Exhaust

PNEUMATIC PEDAL WITHOUT A PROTECTIVE COVER

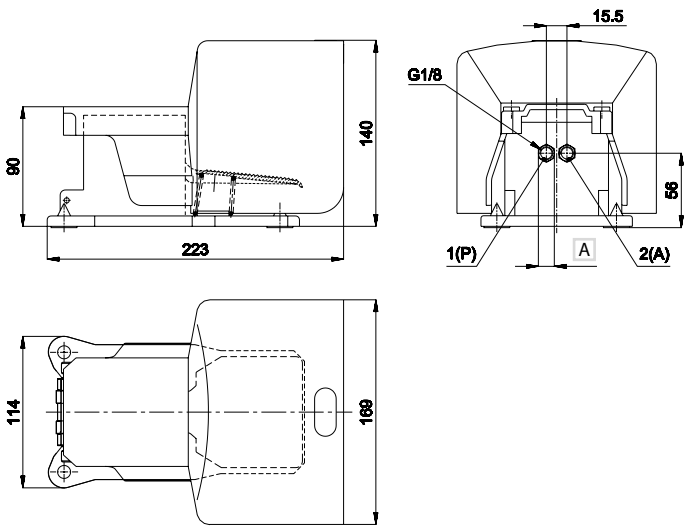

Threaded fittings for various applications:

2/2 NC		2/2 NO		3/2 NC			3/2 NO		
A	P	B	P	A	P	R	B	P	S
4	1	2	1	4	1	5	2	1	3

A = Wrench 12
1 (P) = Supply port
2 (A) = Use

SOLENOID FOOT VALVE

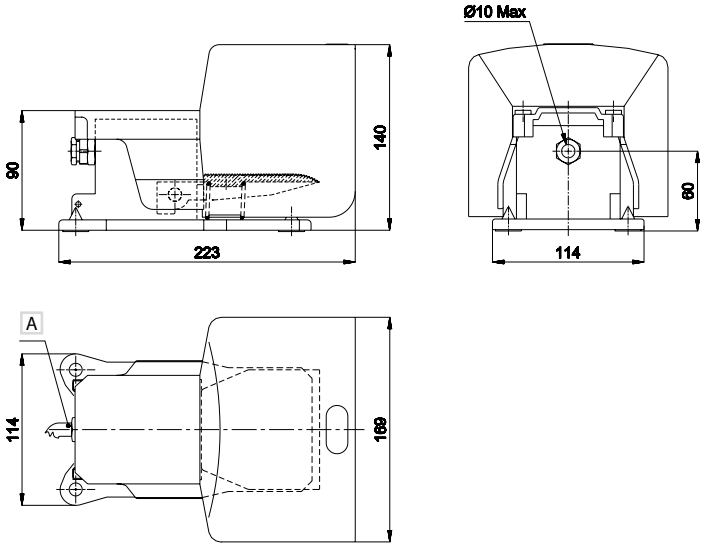

A = Electrical cable