AIGNEP

Valves Series

Solenoid Valves



01V

Pg. 18.3

Inox Solenoid Valves



X1V

Pg. 18.42

Solenoid Valves



07V

Pg. 18.50

Namur Solenoid Valves



08V

Pg. 18.53

Miniature Electropilots U1



AA

Pg. 18.60

Universal Valves G1/8 - G1/4



CL - CM

Pg. 18.67

Rotary Hand Lever Valves



12V

Pg. 18.96

Micro Valves



AI JET

Pg. 18.99

Micro Valves



AI JET2

Pg. 18.104

16mm Valves - Mechanical and Manual Operators



CH

Pg. 18.107

Pedal Valves



AM

Pg. 18.110

FIELDBUS Valves Series

Fieldbus Electropneumatic Valves



16V

Pg. 18.114

Fieldbus Electropneumatic Valves



17V

Pg. 18.121

ISO Valves Series

Valves ISO 5599/1 - Sizes 1 - 2 - 3 - 4



BE

Pg. 18.156

COILS & CONNECTORS Series

Solenoids and Connectors



Coils & Connectors

Pg. 18.169

Click here to view the Valves Series on our Website

AIGNEP

AIGNEP

MANUAL, PNEUMATIC, SOLENOID PILOT, FIELDBUS, AND ISO VALVES

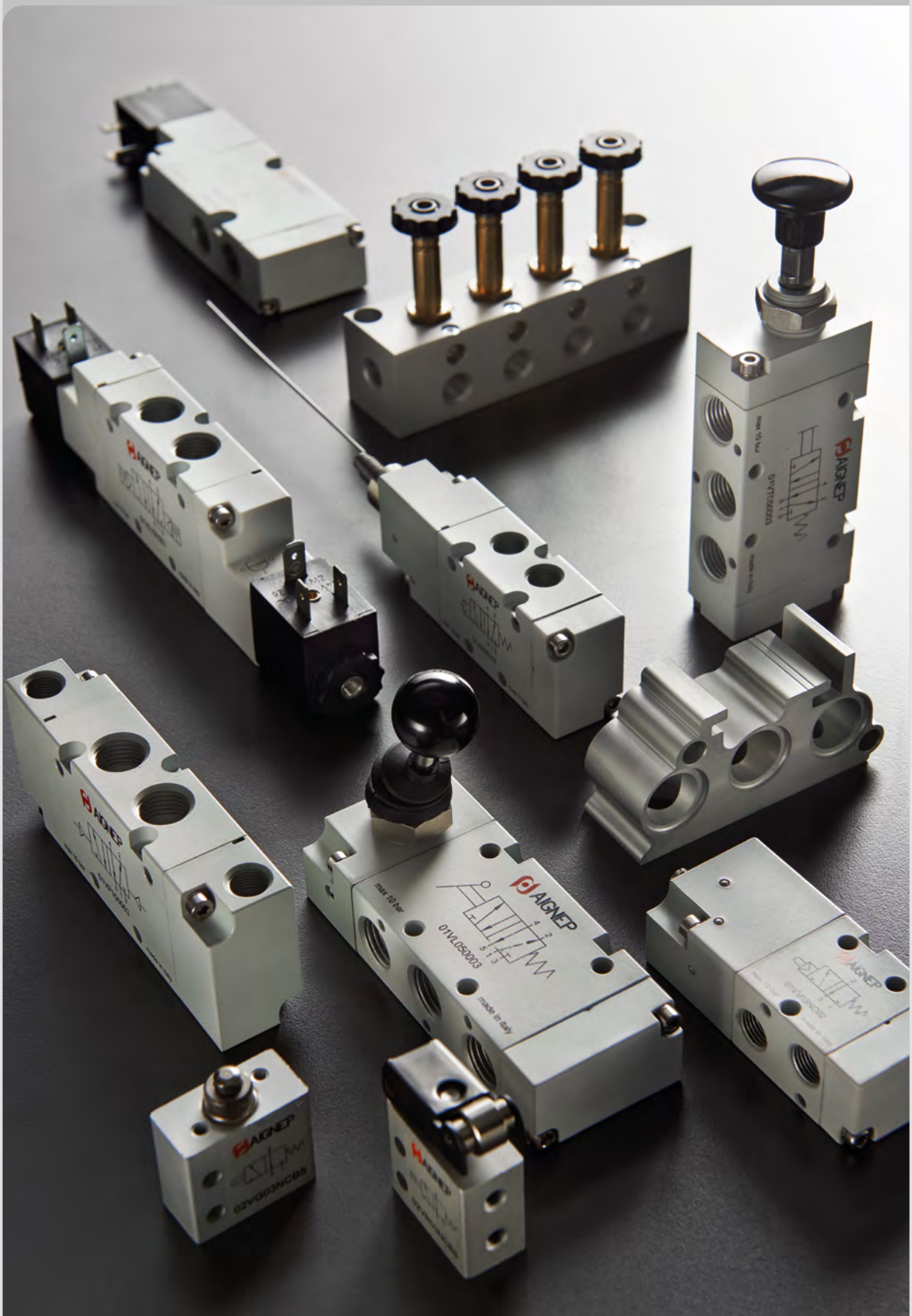

Valves Series

BE SERIES - VALVES ISO 5599/1

ISO 5599/1 Valves

- Compliant with international ISO 5599/1 standards
- Complete range: sizes 1 - 2 - 3 - 4
- Two switching systems available: mixed and spool type
- High flow rate
- Short internal stroke
- No lubrication required
- Version with M12 electrical connection for the Automotive industry (sizes 1 - 2 - 3)
- Modular and individual manifolds available
- Possibility of combining different sub-base sizes through dedicated interfaces

Fluid	50 µm filtered air (mixed system)			
	50 µm filtered air, with or without lubrication (spool system)			
Ambient temperature	14 ÷ 122 °F (-10 ÷ 50 °C)			
Fluid temperature	Max 122 °F (50 °C)			
Commutation system	mixed system, spool system			
Ways/Positions	5/2, 5/3			
Pressure	Max 145 psi (10 bar)			
Control	indirect electro-pneumatic, pneumatic			
Return	mechanical spring, pneumomechanical spring, pneumatic, electric			
Connections	ISO 5599/1 interface			
	size 1	size 2	size 3	size 4
Nominal Ø (mm)	8	10	15	19
Nominal flow rate (Nl/min)	1480	2300	4200	6600
Valve body	acetal resin			
Cover	aluminum			
Seals	mixed system: nitrile rubber and polyurethane			
	spool system: nitrile rubber			
Sub-base	zamak - aluminum			
Actuators	technopolymer			
Spool	aluminum			
Electropilot	AA series			
Coil	series U3			
Power consumption	2,5 W (DC) - 5 VA (AC)			
Voltage	12 V DC - 24 V DC - 24 V AC - 110 V AC - 230 V AC			
Connector	CONU 3			
Manual override	impulse screw - 2 positions, button with tool (BE)			
	recessed button - 1 position (BE12)			

Reference Standard

II 2G Ex h IIC T5 Gb

II 2D Ex h IIIC T100°C Db

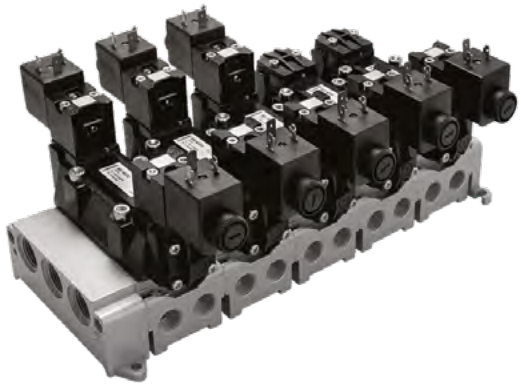

MIXED
for heavy applications



SPOOL
for all applications



FLOW RATE CHARACTERISTICS

ISO 1

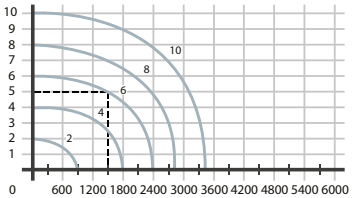

ISO 2

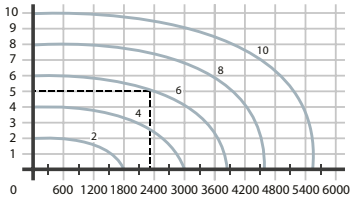

ISO 3

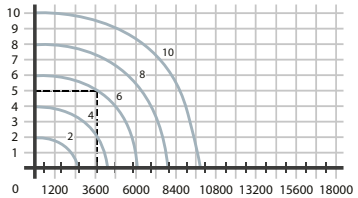

ISO 4

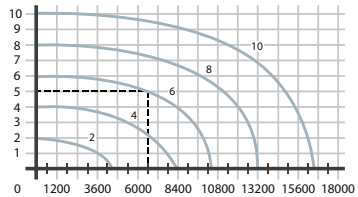

P = Working pressure
PA = Supply pressure
Qn = Nominal flow rate

ISO 5599/1 STANDARD

The ISO standard for pneumatic valves is accepted by industry and by the majority of the main important pneumatic valve manufactures throughout the world. The choice of valves according to ISO standard guarantees to the user the interchangeability of both the valve body and the electromagnetic part.

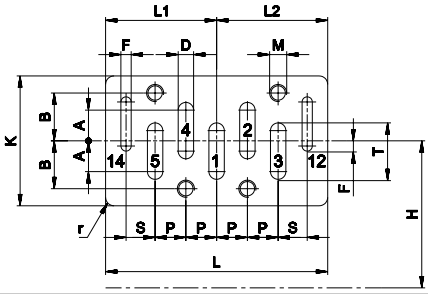

1 = Supply port
3 - 5 = Exhaust
2 - 4 = Use
12 - 14 = Pilots

	A	B	D	F	H	K	L	L1	L2	M	P	r	S	T
ISO 1	.354 (9)	.551 (14)	.177 (4.5)	.118 (3)	1.693 (43)	1.496 (38)	2.559 (65)	1.280 (32.5)	1.280 (32.5)	M5	.354 (9)	.098 (2.5)	.335 (8.5)	.650 (16.5)
ISO 2	.394 (10)	.748 (19)	.276 (7)	.118 (3)	2.205 (56)	1.969 (50)	3.189 (81)	1.594 (40.5)	1.594 (40.5)	M6	.472 (12)	.118 (3)	.394 (10)	.866 (22)
ISO 3	.453 (11.5)	.945 (24)	.394 (10)	.157 (4)	2.795 (71)	2.520 (64)	4.173 (106)	2.087 (53)	2.087 (53)	M8	.630 (16)	.157 (4)	.512 (13)	1.142 (29)
ISO 4	.571 (14.5)	1.142 (29)	.512 (13)	.157 (4)	3.228 (82)	2.913 (74)	5.591 (142)	3.051 (77.5)	2.539 (64.5)	M8	.787 (20)	.157 (4)	.610 (15.5)	1.437 (36.5)

fixes the dimensions of the bearing surface of the valve and provides accomodation between two contiguous planes while guaranteeing, at the time of replacement, that any suitable valve can be inserted in the manifold assembly. It also provides a clear numbering system for the ports. Main connecting ports:

(e.g. single electrical impulse solenoid mounted side 14 single pneumatic impulse control at 14)

Key

Screwdriver adjustment

Pressure applied with a tool

Manual adjustment

MANUAL CONTROL STANDARD

TWO-POSITION SCREWDRIVER

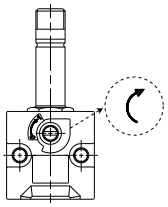

Standard **BE**

MANUAL CONTROLS ON REQUEST

TWO-POSITION SCREWDRIVER

LETTER TO BE ADDED AT THE END OF THE ELECTROPILOT CODE

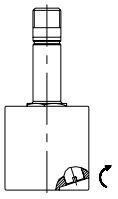

A

EXAMPLE:
UBE 5150A

PRESSURE-OPERATED WITH TOOL

LETTER TO BE ADDED AT THE END OF THE ELECTROPILOT CODE

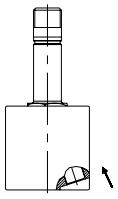

U

EXAMPLE:
UBE 5150U

LEVER

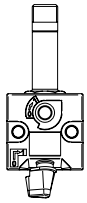

R

EXAMPLE:
UBE 5150R

PNEUMATIC IMPULSE



Code	Way	Size ISO	Control 14	Return 12	Pressure psi (bar)	Response Time (ms) En.	Response Time (ms) De-en.	Weight lb (kg)	
MIXED SYSTEM									
UBE 3100	5/2	1	pneumatic amplified	pneumatic + spring	29 ÷ 145 (2 ÷ 10)	9	18	0.66 (0.30)	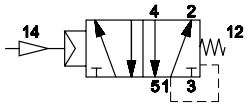
UBE 4100	5/2	2	pneumatic amplified	pneumatic + spring	33 ÷ 145 (2.3 ÷ 10)	11	14	0.88 (0.40)	
UBE 5100	5/2	3	pneumatic amplified	pneumatic + spring	36 ÷ 145 (2.5 ÷ 10)	19	49	1.43 (0.65)	
UBE 6100	5/2	4	pneumatic amplified	pneumatic + spring	44 ÷ 145 (3 ÷ 10)	23	46	1.92 (0.87)	
UBE 3150	5/2	1	pneumatic amplified	pneumatic amplified	15 ÷ 145 (1 ÷ 10)	5	5	0.66 (0.30)	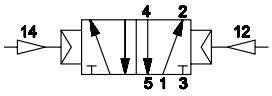
UBE 4150	5/2	2	pneumatic amplified	pneumatic amplified	15 ÷ 145 (1 ÷ 10)	6	6	0.88 (0.40)	
UBE 5150	5/2	3	pneumatic amplified	pneumatic amplified	15 ÷ 145 (1 ÷ 10)	10	10	1.43 (0.65)	
UBE 6150	5/2	4	pneumatic amplified	pneumatic amplified	19 ÷ 145 (1.3 ÷ 10)	12	12	1.92 (0.87)	
UBE 3170	5/2	1	pneumatic amplified	pneumatic non-amplified (differential)	29 ÷ 145 (2 ÷ 10)	5	16	0.66 (0.30)	
UBE 4170	5/2	2	pneumatic amplified	pneumatic non-amplified (differential)	29 ÷ 145 (2 ÷ 10)	6	13	0.88 (0.40)	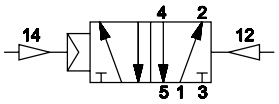
UBE 5170	5/2	3	pneumatic amplified	pneumatic non-amplified (differential)	32 ÷ 145 (2.2 ÷ 10)	10	35	1.43 (0.65)	
UBE 6170	5/2	4	pneumatic amplified	pneumatic non-amplified (differential)	32 ÷ 145 (2.2 ÷ 10)	12	32	1.92 (0.87)	
SPOOL SYSTEM									
UBE 3800	5/2	1	pneumatic amplified	pneumatic + spring	26 ÷ 145 (1.8 ÷ 10)	11	22	0.66 (0.30)	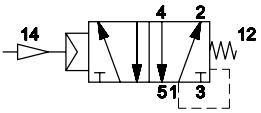
UBE 4800	5/2	2	pneumatic amplified	pneumatic + spring	29 ÷ 145 (2 ÷ 10)	13	19	0.88 (0.40)	
UBE 5800	5/2	3	pneumatic amplified	pneumatic + spring	32 ÷ 145 (2.2 ÷ 10)	21	52	1.43 (0.65)	
UBE 6800	5/2	4	pneumatic amplified	pneumatic + spring	41 ÷ 145 (2.8 ÷ 10)	24	29	1.92 (0.87)	
UBE 3850	5/2	1	pneumatic amplified	pneumatic amplified	12 ÷ 145 (0.8 ÷ 10)	6	6	0.66 (0.30)	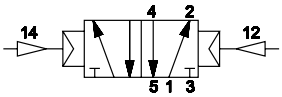
UBE 4850	5/2	2	pneumatic amplified	pneumatic amplified	15 ÷ 145 (1 ÷ 10)	7	7	0.88 (0.40)	
UBE 5850	5/2	3	pneumatic amplified	pneumatic amplified	15 ÷ 145 (1 ÷ 10)	12	12	1.43 (0.65)	
UBE 6850	5/2	4	pneumatic amplified	pneumatic amplified	15 ÷ 145 (1 ÷ 10)	14	14	1.92 (0.87)	
UBE 3870	5/2	1	pneumatic amplified	pneumatic non-amplified (differential)	22 ÷ 145 (1.5 ÷ 10)	6	15	0.66 (0.30)	
UBE 4870	5/2	2	pneumatic amplified	pneumatic non-amplified (differential)	26 ÷ 145 (1.8 ÷ 10)	7	14	0.88 (0.40)	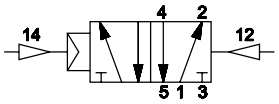
UBE 5870	5/2	3	pneumatic amplified	pneumatic non-amplified (differential)	29 ÷ 145 (2 ÷ 10)	12	38	1.43 (0.65)	
UBE 6870	5/2	4	pneumatic amplified	pneumatic non-amplified (differential)	29 ÷ 145 (2 ÷ 10)	14	31	1.92 (0.87)	

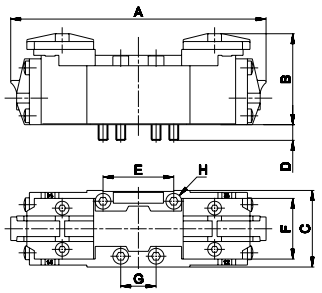

	ISO 1	ISO 2	ISO 3	ISO 4
A	5.039 (128)	5.709 (145)	7.520 (191)	8.740 (222)
B	1.850 (47)	1.850 (47)	2.480 (63)	2.480 (63)
C	1.535 (39)	2.047 (52)	2.520 (64)	2.913 (74)
D	.197 (5)	.197 (5)	.394 (10)	.394 (10)
E	1.417 (36)	1.890 (48)	2.520 (64)	3.150 (80)
F	1.102 (28)	1.496 (38)	1.890 (48)	2.283 (58)
G	.709 (18)	.945 (24)	1.260 (32)	1.575 (40)
H	M5x38	M6x35	M8x50	M8x50

For manual version with button, add "U" to the end of the part number
The solenoid valves are supplied without coil and connector.

SINGLE ELECTRIC IMPULSE



Code	Way	Size ISO	Control 14	Return 12	Pressure psi (bar)	Response Time (ms) En.	Response Time (ms) De-en.	Weight lb (kg)	
MIXED SYSTEM									
UBE 3000	5/2	1	electric amplified	pneumatic + spring	29 ÷ 145 (2 ÷ 10)	20	32	0.82 (0.37)	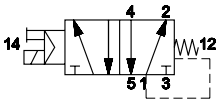
UBE 4000	5/2	2	electric amplified	pneumatic + spring	33 ÷ 145 (2.3 ÷ 10)	24	25	1.04 (0.47)	
UBE 5000	5/2	3	electric amplified	pneumatic + spring	36 ÷ 145 (2.5 ÷ 10)	32	71	1.81 (0.82)	
UBE 6000	5/2	4	electric amplified	pneumatic + spring	44 ÷ 145 (3 ÷ 10)	38	62	2.29 (1.04)	
UBE 3060	5/2	1	electric amplified	pneumatic amplified	15 ÷ 145 (1 ÷ 10)	16	6	0.82 (0.37)	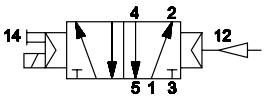
UBE 4060	5/2	2	electric amplified	pneumatic amplified	15 ÷ 145 (1 ÷ 10)	17	7	1.04 (0.47)	
UBE 5060	5/2	3	electric amplified	pneumatic amplified	15 ÷ 145 (1 ÷ 10)	23	15	1.81 (0.82)	
UBE 6060	5/2	4	electric amplified	pneumatic amplified	19 ÷ 145 (1.3 ÷ 10)	25	16	2.29 (1.04)	
SPOOL SYSTEM									
UBE 3700	5/2	1	electric amplified	pneumatic + spring	29 ÷ 145 (2 ÷ 10)	21	35	0.82 (0.37)	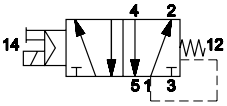
UBE 4700	5/2	2	electric amplified	pneumatic + spring	32 ÷ 145 (2.2 ÷ 10)	24	30	1.04 (0.47)	
UBE 5700	5/2	3	electric amplified	pneumatic + spring	33 ÷ 145 (2.3 ÷ 10)	33	74	1.81 (0.82)	
UBE 6700	5/2	4	electric amplified	pneumatic + spring	41 ÷ 145 (2.8 ÷ 10)	39	68	2.29 (1.04)	
UBE 3760	5/2	1	electric amplified	pneumatic amplified	15 ÷ 145 (1 ÷ 10)	17	8	0.82 (0.37)	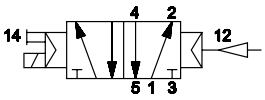
UBE 4760	5/2	2	electric amplified	pneumatic amplified	15 ÷ 145 (1 ÷ 10)	18	9	1.04 (0.47)	
UBE 5760	5/2	3	electric amplified	pneumatic amplified	15 ÷ 145 (1 ÷ 10)	26	17	1.81 (0.82)	
UBE 6760	5/2	4	electric amplified	pneumatic amplified	19 ÷ 145 (1.3 ÷ 10)	27	18	2.29 (1.04)	

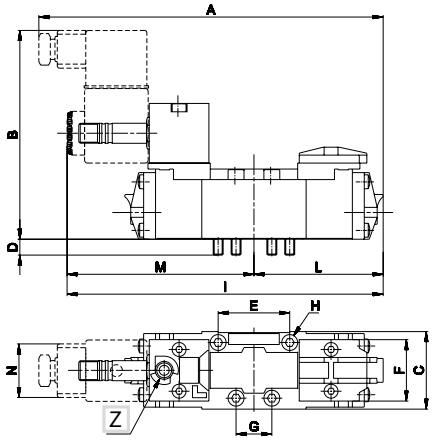

	ISO 1	ISO 2	ISO 3	ISO 4
A	6.673 (169.5)	7.697 (195.5)	8.622 (219)	9.961 (253)
B	4.134 (105)	4.134 (105)	4.646 (118)	4.646 (118)
C	1.535 (39)	2.047 (52)	2.520 (64)	2.913 (74)
D	.197 (5)	.197 (5)	.394 (10)	.394 (10)
E	1.417 (36)	1.890 (48)	2.520 (64)	3.150 (80)
F	1.102 (28)	1.496 (38)	1.890 (48)	2.283 (58)
G	.709 (18)	.945 (24)	1.260 (32)	1.575 (40)
H	M5x38	M6x35	M8x50	M8x50
I	6.280 (159.5)	6.929 (176)	8.209 (208.5)	9.252 (235)
L	2.520 (64)	2.854 (72.5)	3.760 (95.5)	4.370 (111)
M	3.760 (95.5)	4.075 (103.5)	4.449 (113)	4.882 (124)
N	1.181 (30)	1.181 (30)	1.181 (30)	1.181 (30)

Z Two position manual control

For manual version with button, add "U" to the end of the part number
The solenoid valves are supplied without coil and connector.

DOUBLE ELECTRIC IMPULSE



Code	Way	Size ISO	Control 14	Return 12	Pressure psi (bar)	Response Time (ms) En.	Response Time (ms) De-en.	Weight lb (kg)	
MIXED SYSTEM									
UBE 3020	5/2	1	electric amplified	electric amplified	15 ÷ 145 (1 ÷ 10)	16	16	0.86 (0.39)	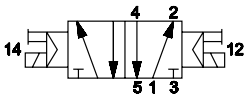
UBE 4020	5/2	2	electric amplified	electric amplified	15 ÷ 145 (1 ÷ 10)	17	17	1.41 (0.64)	
UBE 5020	5/2	3	electric amplified	electric amplified	15 ÷ 145 (1 ÷ 10)	23	23	2.29 (1.04)	
UBE 6020	5/2	4	electric amplified	electric amplified	19 ÷ 145 (1.3 ÷ 10)	25	25	2.67 (1.21)	
UBE 3030	5/2	1	electric amplified	electric unamplified (differential)	29 ÷ 145 (2 ÷ 10)	16	34	0.86 (0.39)	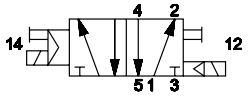
UBE 4030	5/2	2	electric amplified	electric unamplified (differential)	29 ÷ 145 (2 ÷ 10)	17	29	1.41 (0.64)	
UBE 5030	5/2	3	electric amplified	electric unamplified (differential)	32 ÷ 145 (2.2 ÷ 10)	23	54	2.29 (1.04)	
UBE 6030	5/2	4	electric amplified	electric unamplified (differential)	32 ÷ 145 (2.2 ÷ 10)	25	45	2.67 (1.21)	
UBE 3200	5/3 **O.C.**	1	electric amplified	electric amplified	44 ÷ 145 (3 ÷ 10)	50	26	0.86 (0.39)	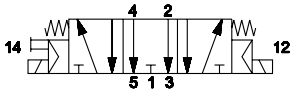
UBE 4200	5/3 **O.C.**	2	electric amplified	electric amplified	44 ÷ 145 (3 ÷ 10)	54	24	1.41 (0.64)	
UBE 5200	5/3 **O.C.**	3	electric amplified	electric amplified	44 ÷ 145 (3 ÷ 10)	108	36	2.29 (1.04)	
UBE 6200	5/3 **O.C.**	4	electric amplified	electric amplified	44 ÷ 145 (3 ÷ 10)	115	115	2.67 (1.21)	
UBE 3205	5/3 **P.C.**	1	electric amplified	electric amplified	29 ÷ 145 (2 ÷ 10)	50	26	0.86 (0.39)	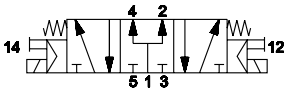
UBE 4205	5/3 **P.C.**	2	electric amplified	electric amplified	33 ÷ 145 (2.3 ÷ 10)	54	24	1.41 (0.64)	
UBE 5205	5/3 **P.C.**	3	electric amplified	electric amplified	36 ÷ 145 (2.5 ÷ 10)	108	36	2.29 (1.04)	
UBE 6205	5/3 **P.C.**	4	electric amplified	electric amplified	44 ÷ 145 (3 ÷ 10)	115	115	2.67 (1.21)	
SPOOL SYSTEM									
UBE 3720	5/2	1	electric amplified	electric amplified	15 ÷ 145 (1 ÷ 10)	17	17	0.86 (0.39)	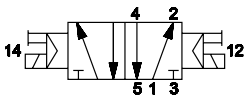
UBE 4720	5/2	2	electric amplified	electric amplified	15 ÷ 145 (1 ÷ 10)	18	18	1.41 (0.64)	
UBE 5720	5/2	3	electric amplified	electric amplified	15 ÷ 145 (1 ÷ 10)	26	26	2.29 (1.04)	
UBE 6720	5/2	4	electric amplified	electric amplified	15 ÷ 145 (1 ÷ 10)	27	27	2.67 (1.21)	
UBE 3730	5/2	1	electric amplified	electric unamplified (differential)	26 ÷ 145 (1.8 ÷ 10)	17	28	0.86 (0.39)	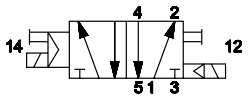
UBE 4730	5/2	2	electric amplified	electric unamplified (differential)	26 ÷ 145 (1.8 ÷ 10)	18	25	1.41 (0.64)	
UBE 5730	5/2	3	electric amplified	electric unamplified (differential)	36 ÷ 145 (2.5 ÷ 10)	26	46	2.29 (1.04)	
UBE 6730	5/2	4	electric amplified	electric unamplified (differential)	36 ÷ 145 (2.5 ÷ 10)	27	42	2.67 (1.21)	
UBE 3900	5/3 **O.C.**	1	electric amplified	electric amplified	33 ÷ 145 (2.3 ÷ 10)	17	25	0.86 (0.39)	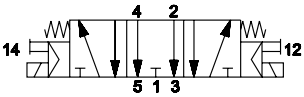
UBE 4900	5/3 **O.C.**	2	electric amplified	electric amplified	36 ÷ 145 (2.5 ÷ 10)	18	27	1.41 (0.64)	
UBE 5900	5/3 **O.C.**	3	electric amplified	electric amplified	36 ÷ 145 (2.5 ÷ 10)	26	50	2.29 (1.04)	
UBE 6900	5/3 **O.C.**	4	electric amplified	electric amplified	36 ÷ 145 (2.5 ÷ 10)	30	47	2.67 (1.21)	
UBE 3940	5/3 **C.C.**	1	electric amplified	electric amplified	33 ÷ 145 (2.3 ÷ 10)	17	25	0.86 (0.39)	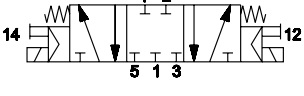
UBE 4940	5/3 **C.C.**	2	electric amplified	electric amplified	36 ÷ 145 (2.5 ÷ 10)	18	27	1.41 (0.64)	
UBE 5940	5/3 **C.C.**	3	electric amplified	electric amplified	36 ÷ 145 (2.5 ÷ 10)	26	50	2.29 (1.04)	
UBE 6940	5/3 **C.C.**	4	electric amplified	electric amplified	36 ÷ 145 (2.5 ÷ 10)	30	47	2.67 (1.21)	

O.C. = open centers **C.C.** = closed centers **P.C.** = pressurized centers

For manual version with button, add "U" to the end of the part number

For version with manual override contact our Sales Department

DOUBLE ELECTRIC IMPULSE

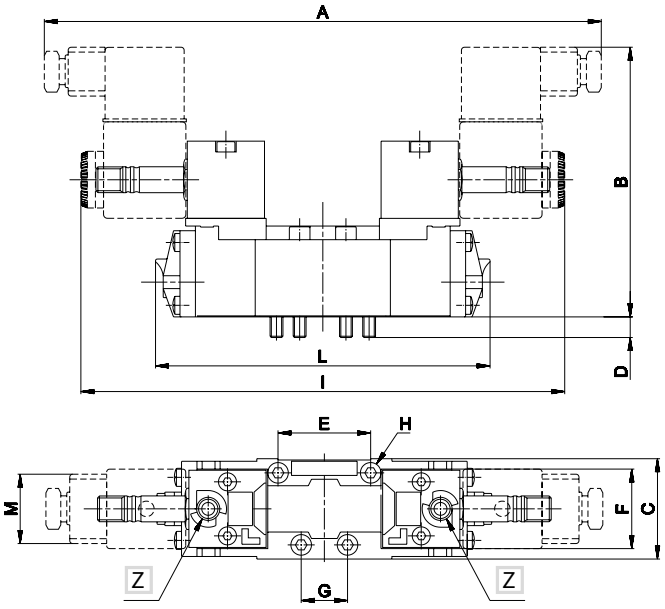

	ISO 1	ISO 2	ISO 3	ISO 4
A	8.307 (211)	8.898 (226)	9.724 (247)	10.551 (268)
B	4.134 (105)	4.134 (105)	4.646 (118)	4.646 (118)
C	1.535 (39)	2.047 (52)	2.520 (64)	2.913 (74)
D	.197 (5)	.197 (5)	.394 (10)	.394 (10)
E	1.417 (36)	1.890 (48)	2.520 (64)	3.150 (80)
F	1.102 (28)	1.496 (38)	1.890 (48)	2.283 (58)
G	.709 (18)	.945 (24)	1.260 (32)	1.575 (40)
H	M5x38	M6x35	M8x50	M8x50
I	7.520 (191)	8.150 (207)	8.898 (226)	9.764 (248)
L	5.039 (128)	5.709 (145)	7.520 (191)	8.740 (222)
M	1.181 (30)	1.181 (30)	1.181 (30)	1.181 (30)

Z Two position manual control

U3 30 MM COIL TO BE USED WITH BE ELECTROPILOT



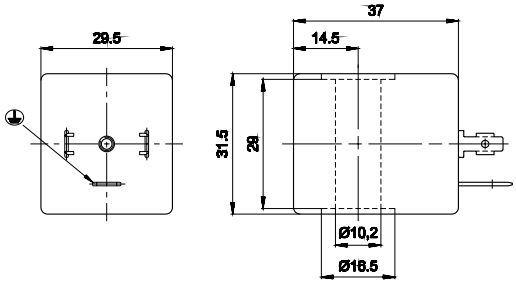

30 mm

10 mm Ø

Code	Duty cycle ED (a) %	Power consumption W		Tolerance tension %	Rated voltage	Weight
		Hold	Inrush			
UDC 0301	100	2,5	2,5	±10	12 V DC	0.18 lb (0.08 kg)
UDC 0302	100	2,5	2,5	±10	24 V DC	0.18 lb (0.08 kg)
UDC 0307	100	3,3 VA (Max)	5 VA (Max)	±10	24 V AC/50-60 HZ	0.18 lb (0.08 kg)
UDC 0309	100	3,3 VA (Max)	5 VA (Max)	±10	110 V AC/50-60 HZ	0.18 lb (0.08 kg)
UDC 0310	100	3,3 VA (Max)	5 VA (Max)	±10	230 V AC/50-60 HZ	0.18 lb (0.08 kg)

(a) Solenoid valves operating at 110 V–230 V must be built-in (EN 60204-1).
In continuous operation, the operating temperature does not affect the operation of the coil, provided that the unit is installed in a well-ventilated area.



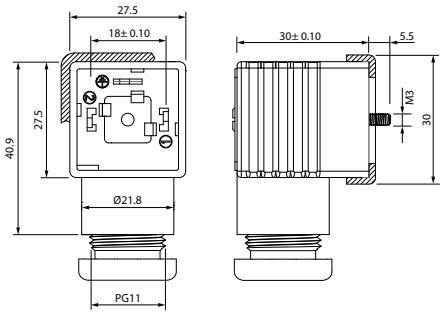

			Size	Color	Characteristics
*	CONU3 100 01	c UL us	30 - 36 mm	BLACK	2 PINS
*	CONU3 202 40	c UL us	30 - 36 mm	TRANSPARENT	LED + VDR 0 - 24V
*	CONU3 211 00	c UL us	30 - 36 mm	TRANSPARENT	LED + VDR 110V
*	CONU3 225 00	c UL us	30 - 36 mm	TRANSPARENT	LED + VDR 220V

*: UL 1977 AND CAN/CSA C22.2 NO. 182.3

VDR: Fitted with varistors as surge protection device.

The solenoid valves are supplied without coil and connector.

SINGLE SUB-BASE, SIDE CONNECTIONS

	Code	Size ISO	Note	Connection	Material	Weight lb (kg)
	UBF 1060	1	in line connections	G1/8	Zamak	0.55 (0.25)
	UBF 1061	1	in line connections	G1/4	Zamak	0.55 (0.25)
	UBF 1150	2	in line connections	G1/4	Zamak	1.43 (0.65)
	UBF 1151	2	in line connections	G3/8	Zamak	1.43 (0.65)
	UBF 3060	3	in line connections	G1/2	Aluminum	1.63 (0.74)
	UBF 3061	3	in line connections	G3/4	Aluminum	1.63 (0.74)
	UBF 4060	4	in line connections	G3/4	Aluminum	2.82 (1.28)
	UBF 4061	4	dorsal and side connections	G1	Aluminum	2.82 (1.28)

ISO 1

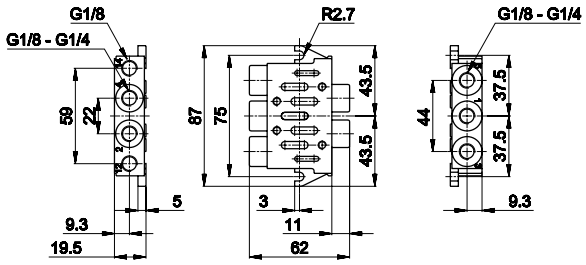

1= Supply port
2 - 4 = Use
3 - 5 = Exhaust
12 - 14 = Pilots

ISO 2

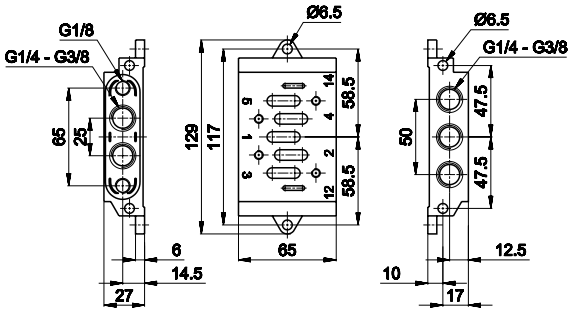

1= Supply port
2 - 4 = Use
3 - 5 = Exhaust
12 - 14 = Pilots

ISO 3

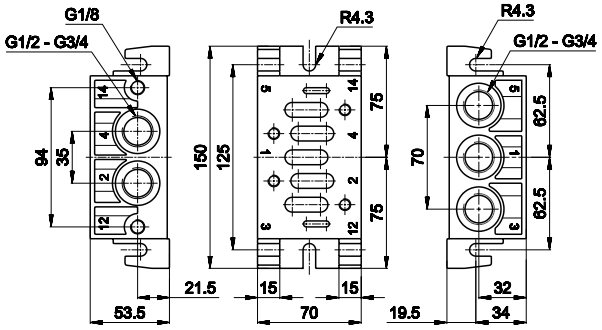

1= Supply port
2 - 4 = Use
3 - 5 = Exhaust
12 - 14 = Pilots

ISO 4

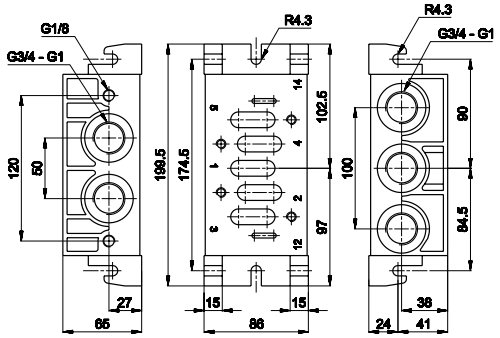

1= Supply port
2 - 4 = Use
3 - 5 = Exhaust
12 - 14 = Pilots

SINGLE SUB-BASE, DORSAL CONNECTIONS

	Code	Size ISO	Note	Connection	Material	Weight lb (kg)
	UBF 1062	1	dorsal connections	G1/8	Zamak	0.77 (0.35)
	UBF 1063	1	dorsal connections	G1/4	Zamak	0.77 (0.35)

Single modular or Manifold sub-base, dorsal connections, separate exhausts
Single assembly: close side ports (G1/8 - G1/4). Manifold assembly with common inlet: close dorsal connections n.1.With incorporated screws and seals

	UBF 1152	2	dorsal connections	G1/4	Zamak	1.43 (0.65)
	UBF 1153	2	dorsal connections	G3/8	Zamak	1.43 (0.65)
	UBF 3063	3	dorsal connections	G3/4	Aluminum	1.59 (0.72)
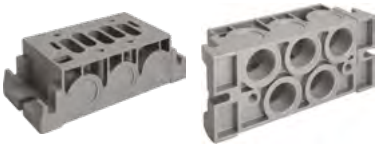	UBF 4062	4	dorsal connections	G3/4	Aluminum	2.73 (1.24)
	UBF 4063	4	dorsal connections	G1	Aluminum	2.73 (1.24)

ISO 1

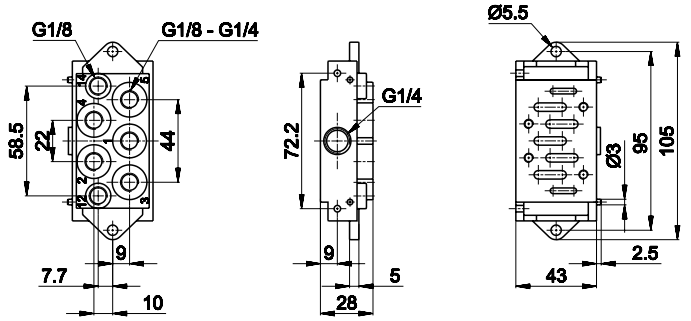

1= Supply port
2 - 4 = Use
3 - 5 = Exhaust
12 - 14 = Pilots

ISO 2

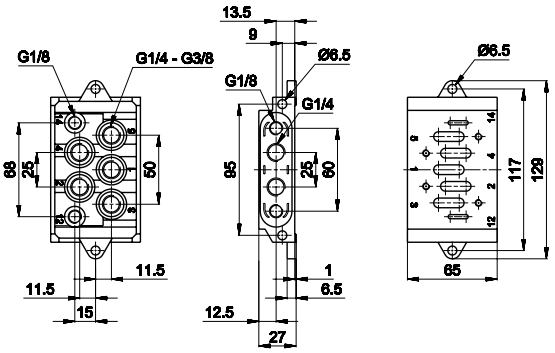

1= Supply port
2 - 4 = Use
3 - 5 = Exhaust
12 - 14 = Pilots

ISO 3

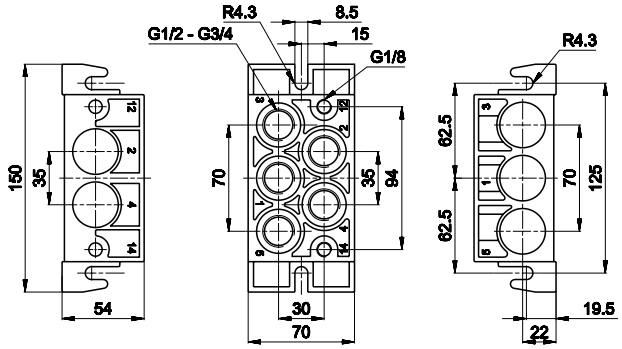

1= Supply port
2 - 4 = Use
3 - 5 = Exhaust
12 - 14 = Pilots

ISO 4

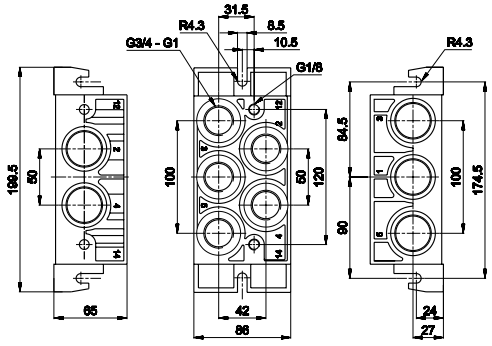

1= Supply port
2 - 4 = Use
3 - 5 = Exhaust
12 - 14 = Pilots

ISO 1 - MANIFOLD UNIVERSAL SYSTEM SUB-BASE

	Code	Note	Connection	Material	Weight lb (kg)
MANIFOLD UNIVERSAL SYSTEM SUB-BASE, DORSAL AND SIDE CONNECTIONS, CONVEYED EXHAUSTS					
	**UBF 1071**	dorsal and side connections	G1/8	Aluminum	0.62 (0.28)
	UBF 1072	dorsal and side connections	G1/4	Aluminum	0.62 (0.28)
	UBF 1071S	side pneumatic impulses	G1/8	Aluminum	0.66 (0.30)
	UBF 1072S	side pneumatic impulses	G1/4	Aluminum	0.66 (0.30)

Dorsal and side connections possible. Close unused ports with caps. With incorporated screws, seals, and caps included

MANIFOLD UNIVERSAL SYSTEM INLET PLATE					
	**UBF 1065**	on top connections	G3/8	Zamak	0.77 (0.35)
	UBF 1066	dorsal connections	G3/8	Zamak	0.77 (0.35)
	**UBF 1068**	in line connections	G3/8	Aluminum	0.26 (0.12)

When battery exceeds 4 units, the mounting of 2 plates is recommended Mixed version available upon request. With incorporated screws and seals

MANIFOLD UNIVERSAL SYSTEM DIAPHRAGM					
	**UBF 1070**	-	-	Zamak	0.20 (0.09)

The diaphragm is not only the end plate of the manifold but it is also coupled with the exhaust regulator to separate two sub-bases and regulate the valves independently. In this case break the central blind hole. To get two or more pressures, break the two side blind holes.

CLOSING PLATE FOR SUB-BASE 1					
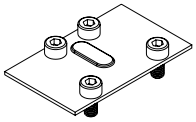	**UBF 1085**	-	-	Steel	0.07 (0.03)

(for all sub-base versions)

MANIFOLD UNIVERSAL SYSTEM SUB-BASE

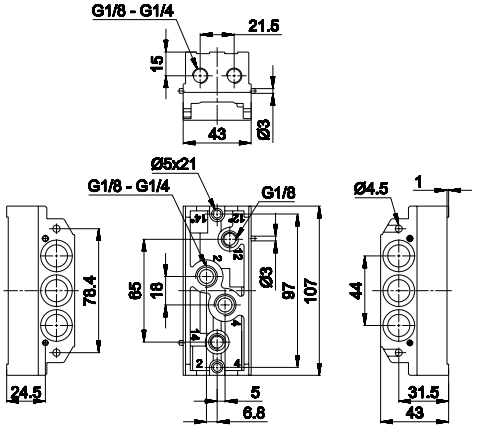

1= Supply port
2 - 4 = Use
3 - 5= Exhaust

12 - 14 = Pilots
12* - 14* = Sideways Pilots

MANIFOLD UNIVERSAL SYSTEM INLET PLATE

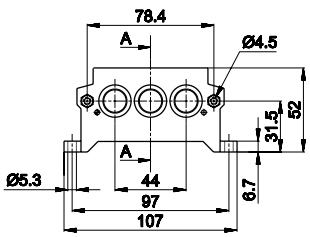

1= Supply port
3 - 5= Exhausta

Section A-A

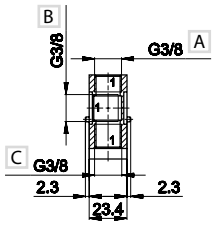

A On top connections
B In line connections
C Dorsal connections

UNIVERSAL MANIFOLD IN-LINE SYSTEM INLET PLATE

Sezione A-A

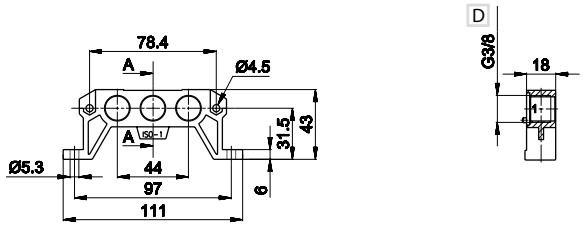

1= Supply port
3 - 5= Exhaust

D Outlets in-line only

MANIFOLD UNIVERSAL SYSTEM DIAPHRAGM

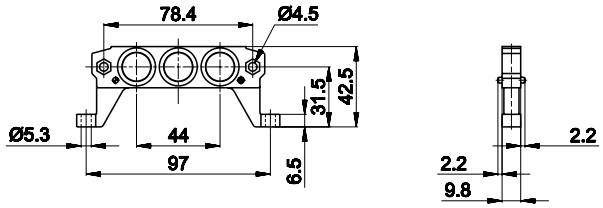

CLOSING PLATE FOR SUB-BASE

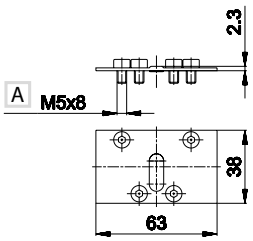

A ISO 4762

ISO 2 - MANIFOLD UNIVERSAL SYSTEM SUB-BASE

	Code	Note	Connection	Material	Weight lb (kg)
UNIVERSAL MANIFOLD BASE WITH REAR AND SIDE OUTLETS FOR CHANNELED EXHAUSTS					
	**UBF 1160**	dorsal and side connections	G1/4	Zamak	1.76 (0.80)
	UBF 1161	dorsal and side connections	G3/8	Zamak	1.76 (0.80)

Dorsal and side connections possible. Close unused ports with caps. With incorporated screws, seals, and caps included

MANIFOLD UNIVERSAL SYSTEM INLET PLATE					
	**UBF 1154**	in line connections	G1/2	Zamak	1.01 (0.46)
	UBF 1155	in line connections	G1/2	Zamak	1.01 (0.46)

When battery exceeds 4 units, the mounting of 2 plates is recommended Mixed version available upon request. With incorporated screws, and seal

UNIVERSAL MANIFOLD DIAPHRAGM					
	**UBF 1162**	-	-	Zamak	0.35 (0.16)

The diaphragm is not only the end plate of the manifold but it is also coupled with the exhaust regulator to separate two sub-bases and regulate the valves independently. In this case break the central blind hole. To get two or more pressures, break the two side blind holes.

CLOSING PLATE FOR SUB-BASE					
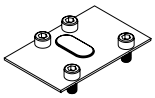	**UBF 1175**	-	-	Steel	0.11 (0.05)

(for all sub-base versions)

MANIFOLD UNIVERSAL SYSTEM SUB-BASE

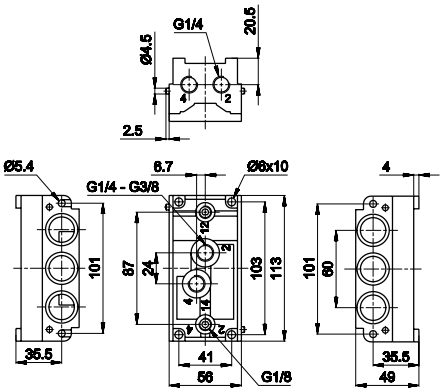

1 = Supply port
2 - 4 = Use
3 - 5 = Exhaust
12 - 14 = Pilots

MANIFOLD UNIVERSAL SYSTEM INLET PLATE

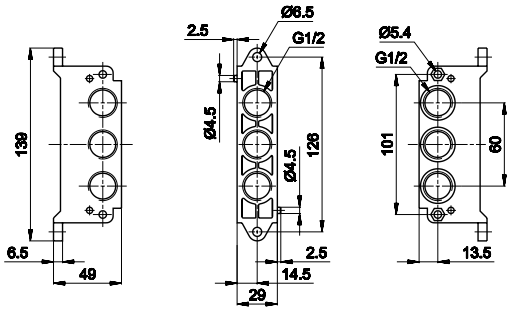

UNIVERSAL MANIFOLD DIAPHRAGM

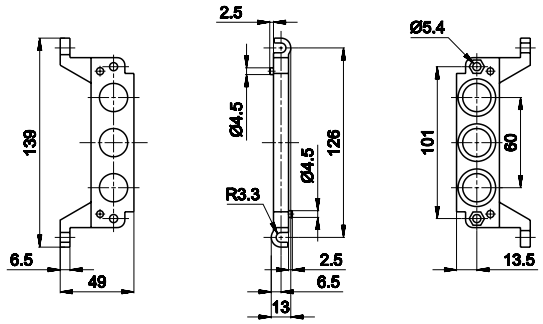

CLOSING PLATE FOR SUB-BASE 2

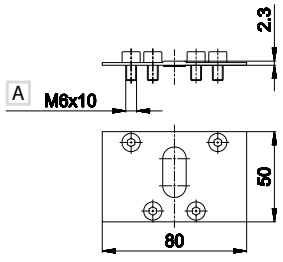

A ISO 4762

ISO 3 - MANIFOLD UNIVERSAL SYSTEM SUB-BASE

	Code	Note	Connection	Material	Weight lb (kg)
MANIFOLD UNIVERSAL SYSTEM SUB-BASE, DORSAL AND SIDE CONNECTIONS, CONVEYED EXHAUSTS					
	UBF 3071	dorsal and side connections	G1/2	Aluminum	2.43 (1.10)
	UBF 3072	dorsal and side connections	G3/4	Aluminum	2.43 (1.10)

Dorsal and side connections possible. Close unused ports with caps. With incorporated screws, seals, and caps included

MANIFOLD UNIVERSAL SYSTEM INLET PLATE

	UBF 3064	in line connections	G1	Aluminum	0.97 (0.44)

When battery exceeds 4 units, the mounting of 2 plates is recommended. Mixed version available upon request. With incorporated screws and seals

CLOSING PLATE FOR SUB-BASE

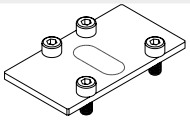	UBF 3175	-	-	Aluminum	0.18 (0.08)

(for all sub-base versions)

UNIVERSAL SYSTEM CAP

	UBF 3082	-	-	Aluminum	0.04 (0.02)

To be used to reach two pressures

MANIFOLD UNIVERSAL SYSTEM SUB-BASE

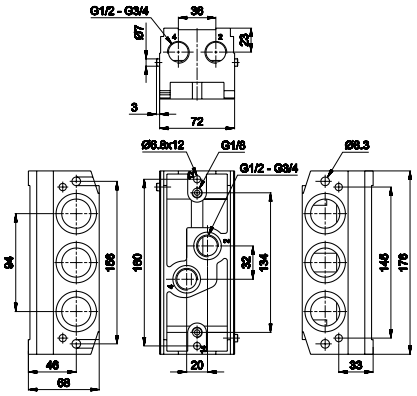

1 = Supply port
2 - 4 = Use
3 - 5 = Exhaust
12 - 14 = Pilots

MANIFOLD UNIVERSAL SYSTEM INLET PLATE

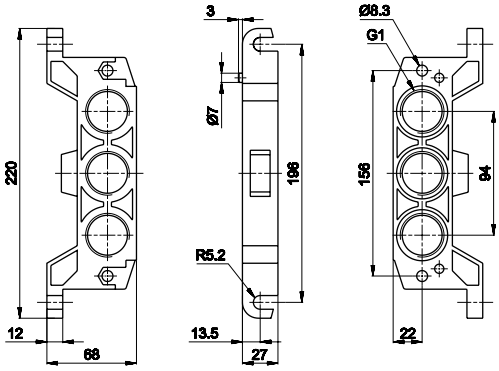

CLOSING PLATE FOR SUB-BASE

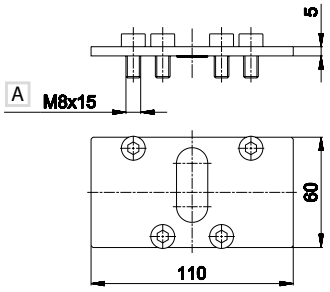

UNIVERSAL SYSTEM CAP

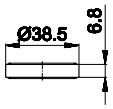

A ISO 4762

CONNECTION INTERFACE FOR UNIVERSAL BASE PLATES

	Code	Material	Weight lb (kg)
CONNECTING INTERFACE FOR UNIVERSAL SUB-BASES SIZES 1 AND 2			
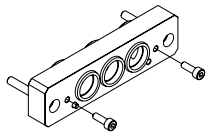	UBF 1190	Aluminum	0.24 (0.11)

It allows the use of sizes 1 and 2 valves in one manifold with conveyed pressure and exhausts. (Upon request: pressure and/or exhausts separated)

CONNECTING INTERFACE FOR UNIVERSAL SUB-BASES SIZES 2 AND 3			
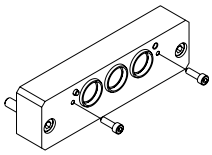	UBF 3190	Aluminum	1.26 (0.57)

It allows the use of sizes 1 and 2 valves in one manifold with conveyed pressure and exhausts. (Upon request: pressure and/or exhausts separated)

CONNECTING INTERFACE FOR UNIVERSAL SUB-BASES SIZES 1 AND 3			
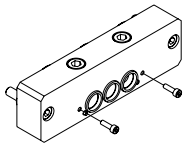	UBF 3191	Aluminum	1.26 (0.57)

It allows the use of sizes 1 and 2 valves in one manifold with conveyed pressure and exhausts. (Upon request: pressure and/or exhausts separated)

CONNECTING INTERFACE FOR UNIVERSAL SUB-BASES SIZES 1-2

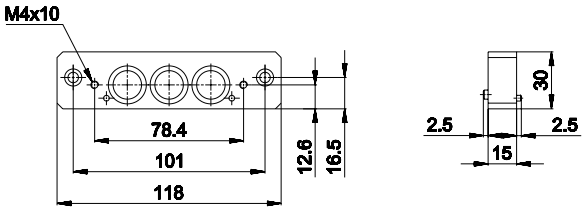

CONNECTING INTERFACE FOR UNIVERSAL SUB-BASES SIZES 2-3

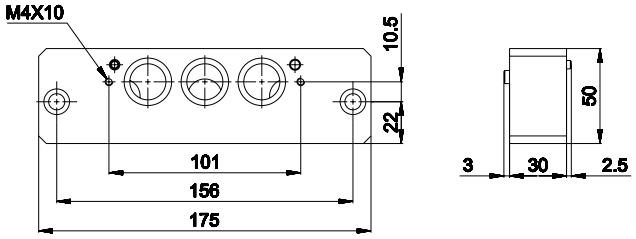

CONNECTING INTERFACE FOR UNIVERSAL SUB-BASES SIZES 1-3

