FRL Mini Series



N010 Mini
Pag. 21.4



N015 Mini
Pag. 21.6



N020 Mini
Pag. 21.8



N070 Mini
Pag. 21.10



N080 Mini
Pag. 21.12



N030 Mini
Pag. 21.14



N040 Mini
Pag. 21.16



N100 Mini
Pag. 21.18



N400 Mini
Pag. 21.20



Accessories
Pag. 21.22

FRL Evo Series



N010
Pag. 21.29



N015
Pag. 21.31



N016
Pag. 21.33



N020
Pag. 21.35



N022
Pag. 21.37



N025
Pag. 21.40



N030
Pag. 21.42



N040
Pag. 21.44



N050
Pag. 21.46



N051
Pag. 21.50



N052
Pag. 21.52



N060
Pag. 21.54



N090
Pag. 21.56



N100
Pag. 21.58



N400
Pag. 21.60



Accessories
Pag. 21.62

Click here to view the FRL Mini Series on our Website

Click here to view the FRL Evo Series on our Website

AIGNEP

AIR TREATMENT UNIT



FRL Series

Mini technical instruction

The FRL components must be assembled in the following order: Filter, Regulator, Lubricator.
While connecting the components, be sure that the air flows towards the direction of the arrows located on the top of the components

Assembling and Setting pressure

1 To set up each component, follow these steps:
- Line up the plates up with the bodies.
- Assemble the parts together, making sure that the O-ring seals are in their proper seats.
- Tighten the screws on the plates.

2 To regulate the pressure, follow these instructions:
- Turn the knob to the desired pressure.
- Rotate the knob to increase or decrease the pressure.
- Press the knob to block into position.

The pressure Gauge has to be assembled manually with the addition of liquid sealant.
The mini quick exhaust regulator allows the circuit downstream to exhaust rapidly when upstream pressure is interrupted.

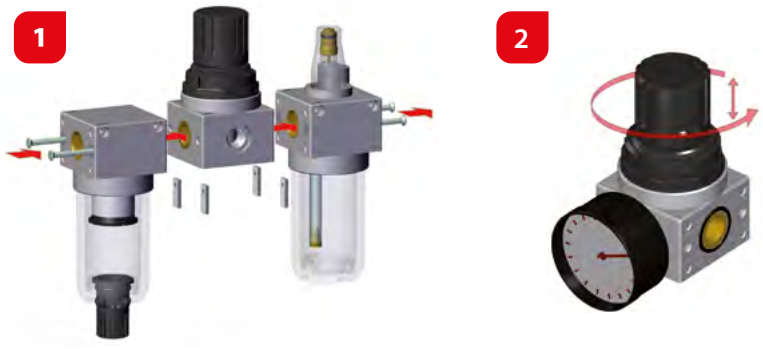

Mini technical instruction

1 The manual/semiautomatic condensation exhaust is normally in the open position; (i.e. it automatically exhausts the condensation when there is no pressure inside the bowl). Pressing the knob will exhaust the condensation even if there is pressure. Turning the knob counter-clockwise will close off the exhaust.

2 To add oil to the lubricator, unscrew the plug located on the top or disassemble the bowl). Make sure that there is no pressure in the system before adding oil or disassembling the bowl.

3 To remove the bowl, use CH3 caliper face spanners. The transparent bowl shows the condensation level in the filter and the oil level in the lubricator.

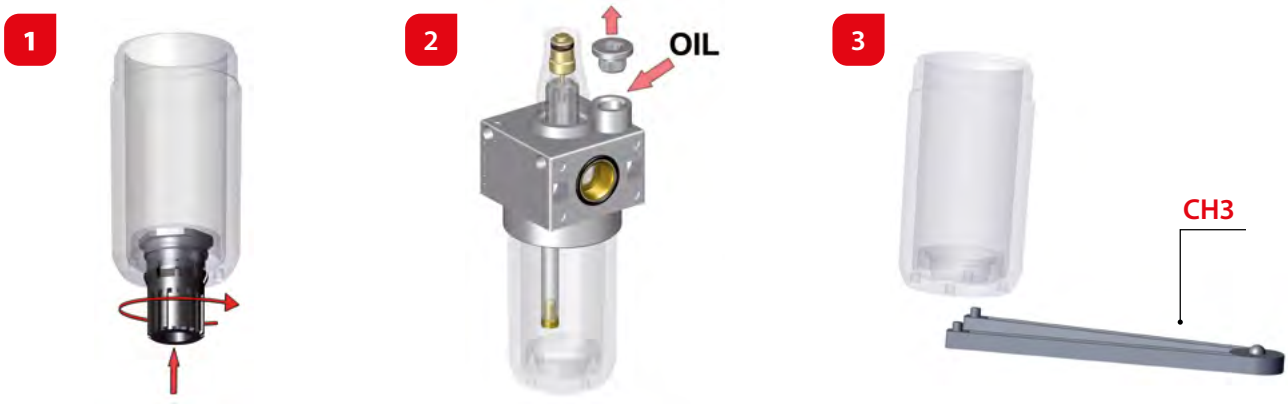

N010 MINI FILTER

TECHNICAL CHARACTERISTICS

Reference standard

1907/2006 REACH
2011/65/CE
PED 2014/68/UE

Component Parts and Materials

1 Technopolymer body
2 Brass threaded insert
3 Technopolymer bowl
4 Technopolymer filter ring
5 Technopolymer condensate exhaust
6 PE filter cartridge
7 Technopolymer slinger
8 NBR O-ring

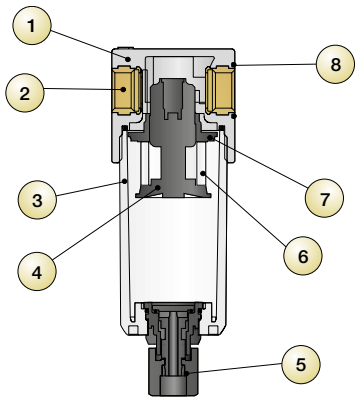

FLUID	Compressed Air
THREAD	1/8" NPTF 1/4" NPTF
FILTRATION GRADE	5 µm 20 µm STANDARD 50 µm
6 bar FLOW RATE with Δp 1 bar	800 Nl/min
MAX PRESSURE	217 psi (15 bar)
TEMPERATURE	14 °F (-10 °C) 122 °F (50 °C)
ASSEMBLY POSITION	Vertical
BOWL CAPACITY	17.5 cm³
CONDENSATION EXHAUST	Manual Semi Automatic

Part Numbering System

Code	Size	Thread	Filtration		Condensate exhaust	Flow Rate		
N 0 1 0	0	0 3	2	0	1	0	0	0
		02 = 1/8 03 = 1/4	1 = 5 2 = 20 3 = 50		1 = Semi Automatic Manual	800 Nl/min		

N010



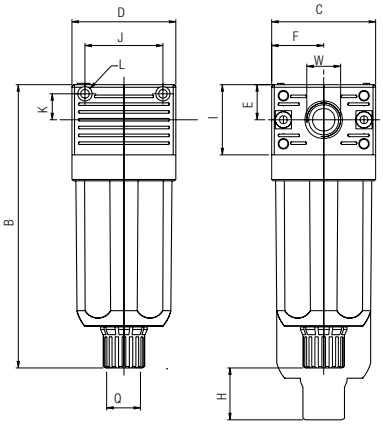



Dimensions

B	C	D	E	F	H	I	J	K	L	W	Q
109	40	40	13.5	20	11	27	30	10	Ø X M3	1/8 - 1/4"	1/8

Code	Size	Thread (NPTF)	Filtration	Flow Rate (NPTF)
N010 002 201 000	FIL 0	1/8	20 µm	800 Nl/min
N010 003 201 000	FIL 0	1/4"	20 µm	800 Nl/min

N015 MINI COALESCER FILTER

TECHNICAL CHARACTERISTICS

Reference standard

1907/2006 REACH
2011/65/CE RoHS
PED 2014/68/UE

Component Parts and Materials

1 Technopolymer body
2 Brass threaded insert
3 Technopolymer bowl
4 Technopolymer condensate exhaust
5 Coalescer cartridge
6 NBR O-ring

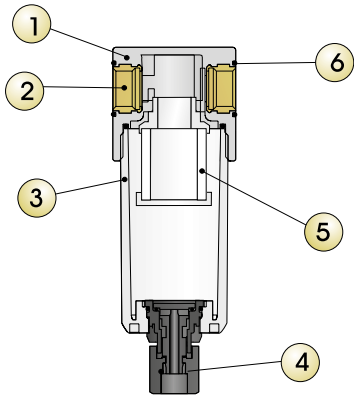

FLUID	5 µm Filtered Compressed Air
THREAD	1/8" NPTF 1/4" NPTF
FILTRATION GRADE	0.01 µm
6 bar FLOW RATE with Δp 1 bar	450 Nl/min
MAX PRESSURE	217 psi (15 bar)
TEMPERATURE	14 °F (-10 °C) 122 °F (50 °C)
ASSEMBLY POSITION	Vertical
BOWL CAPACITY	17.5 cm³
CONDENSATION EXHAUST	Manual Semi Automatic

Part Numbering System

Code	Size	Thread	Filtration		Condensate exhaust	Flow Rate	
N 0 1 5	0	0 3	4	0	1	0	0
		02 = 1/8 03 = 1/4	4 = 0,01 µm		1 = Semi Automatic Manual	450 Nl/min	

N015 Mini



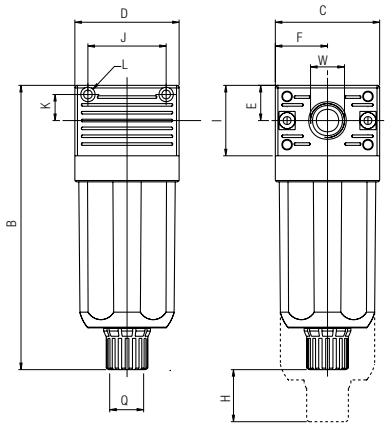



Dimensions

B	C	D	E	F	H	I	J	K	L	W	Q
109	40	40	13.5	20	11	27	30	10	Ø X M3	1/8 - 1/4"	1/8

NB: With Coalescer filter T015 we recommend to install a 5 µm Filter upstream..

Code	Size	Thread (NPTF)	Filtration	Flow Rate (NPTF)
N015 002 401 000	FC 0	1/8	0.01 µm	450 Nl/min
N015 003 401 000	FC 0	1/4"	0.01 µm	450 Nl/min

N020 MINI REGULATOR

TECHNICAL CHARACTERISTICS

Reference standard

1907/2006 REACH ✓ | 2011/65/CE RoHS | PED 2014/68/UE

Component Parts and Materials

1 Technopolymer body
2 Technopolymer bell
3 Technopolymer fixing nut
4 Technopolymer knob
5 Brass register screw
6 Brass female screw
7 Steel register spring
8 Rolling diaphragm
9 NBR relieving diaphragm
10 Shutter with NBR vulcanized seal
11 Technopolymer plug
12 Stainless steel push-shutter spring
13 NBR O-ring
14 Brass threaded insert

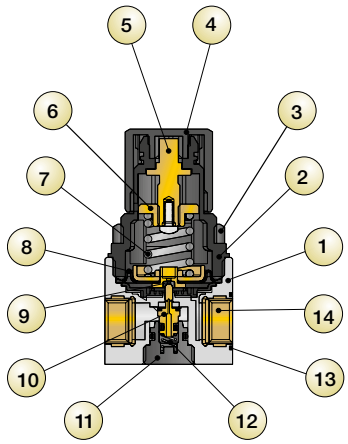

FLUID	Compressed Air
THREAD	1/8" NPTF 1/4" NPTF
REGULATION RANGE	0-29 psi 0-58 psi 0-116 psi (standard) 0-174 psi
6 bar FLOW RATE with Δp 1 bar	600 Nl/min
MAX PRESSURE	217 psi (15 bar)
TEMPERATURE	14 °F (-10 °C) 122 °F (50 °C)
ASSEMBLY POSITION	Vertical
Gauge THREAD	G 1/8

Part Numbering System

Code	Size	Thread	Regulation	Flow Rate
N 0 2 0	0	0 3	0 0 1	0 0 0
		02 = 1/8 03 = 1/4	1 = 0÷2 bar 2 = 0÷4 bar 3 = 0÷8 bar 4 = 0÷12 bar	600 Nl/min

N020 Mini



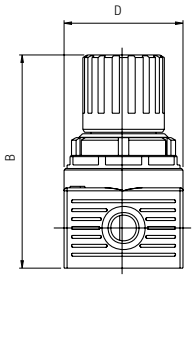

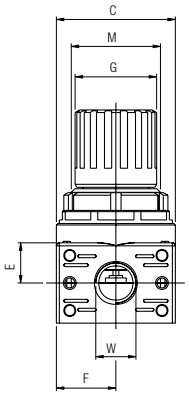

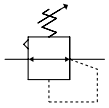

Dimensions

B	C	D	E	F	G	I	M	W
74	40	40	13.5	20	27.5	27	M30X1.5	1/8 - 1/4"

Code	Size	Thread (NPTF)	Regulation	Flow Rate (NPTF)
N020 002 030 000	REG 0	1/8	0-116 psi	600 Nl/min
N020 003 030 000	REG 0	1/4"	0-116 psi	600 Nl/min

N070 MINI QUICK EXHAUST REGULATOR

TECHNICAL CHARACTERISTICS

Reference standard

1907/2006 REACH
2011/65/CE RoHS
PED 2014/68/UE

Component Parts and Materials

1 Technopolymer body
2 Technopolymer bell
3 Technopolymer fixing nut
4 Technopolymer knob
5 Brass register screw
6 Brass female screw
7 Steel register spring
8 Rolling diaphragm
9 NBR relieving diaphragm
10 Shutter with NBR vulcanized seal
11 Technopolymer plug
12 Stainless steel push-shutter spring
13 NBR O-ring
14 Brass threaded insert

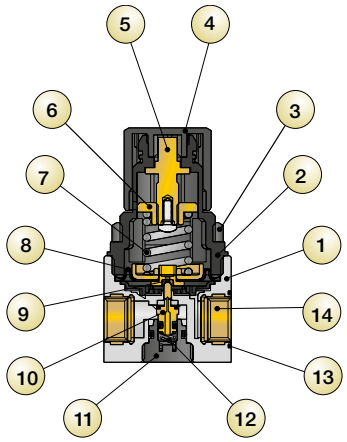

FLUID	Compressed Air
THREAD	1/8" NPTF 1/4" NPTF
REGULATION RANGE	0-29 psi 0-58 psi 0-116 psi (standard) 0-174 psi
6 bar FLOW RATE with Δp 1 bar	600 Nl/min
MAX PRESSURE	217 psi (15 bar)
TEMPERATURE	14 °F (-10 °C) 122 °F (50 °C)
ASSEMBLY POSITION	Vertical
Gauge THREAD	G 1/8

Part Numbering System

Code	Size	Thread	Regulation	Flow Rate
N 0 7 0	0	0 3	0 3 0	0 0 0
		02 = 1/8 03 = 1/4	1 = 0÷2 bar 2 = 0÷4 bar 3 = 0÷8 bar 4 = 0÷12 bar	600 Nl/min

N070 Mini



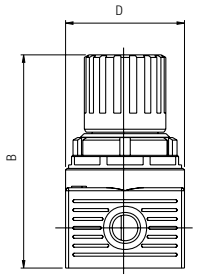

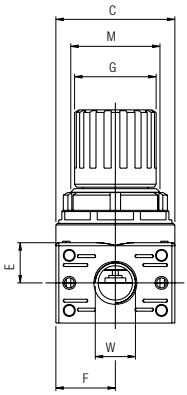

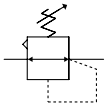

Dimensions

B	C	D	E	F	G	I	M	W
74	40	40	13.5	20	27.5	27	M30X1.5	1/8 - 1/4"

Code	Size	Thread (NPTF)	Regulation	Flow Rate (NPTF)
N070 002 030 000	REG. 0	1/8	0-116 psi	600 Nl/min
N070 003 030 000	REG. 0	1/4"	0-116 psi	600 Nl/min

N080 MINI WATER REGULATOR

TECHNICAL CHARACTERISTICS

Reference standard

1907/2006 REACH
2011/65/CE RoHS
PED 2014/68/UE

Food grade approved version also available.

Component Parts and Materials

1 Technopolymer body
2 Technopolymer bell
3 Technopolymer fixing nut
4 Technopolymer knob
5 Brass register screw
6 Brass female screw
7 Steel register spring
8 Rolling diaphragm
9 Shutter with vulcanized NBR seal
10 Technopolymer plug
11 Stainless steel push-shutter spring
12 NBR O-ring
13 Brass threaded insert

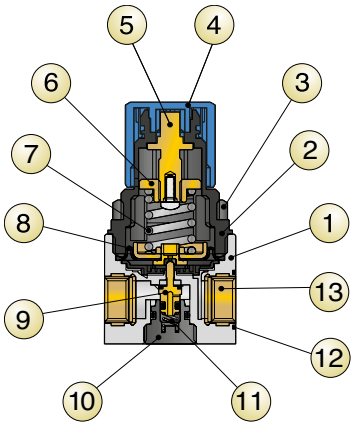

FLUID	Water
THREAD	1/8" NPTF 1/4" NPTF
REGULATION RANGE	0-29 psi 0-58 psi 0-116 psi (standard) 0-174 psi
MAX PRESSURE	217 psi (15 bar)
TEMPERATURE	41 °F (5 °C) 122 °F (50 °C)
ASSEMBLY POSITION	Vertical
Gauge THREAD	G 1/8

Part Numbering System

Code	Size	Thread	Regulation					
N 0 8 0	0	0 3	0	0	1	0	0	0
		02 = 1/8 03 = 1/4	1 = 0÷2 bar 2 = 0÷4 bar 3 = 0÷8 bar 4 = 0÷12 bar					

N080 Mini



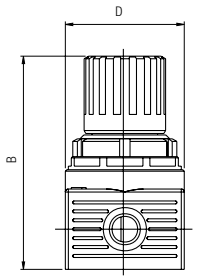

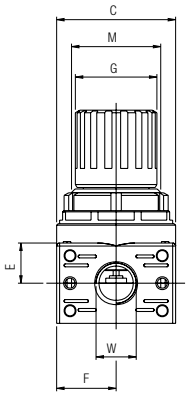

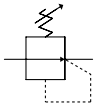

Dimensions

B	C	D	E	F	G	I	M	W
74	40	40	13.5	20	27.5	27	M30X1.5	1/8 - 1/4"

Code	Size	Thread (NPTF)	Regulation
N080 002 030 000	WATER REG. 0	1/8	0-116 psi
N080 003 030 000	WATER REG. 0	1/4"	0-116 psi

N030 MINI FILTER REGULATOR

TECHNICAL CHARACTERISTICS

Reference standard

1907/2006 REACH ✓ | 2011/65/CE RoHS | PED 2014/68/UE

Component Parts and Materials

1 Technopolymer body
2 Technopolymer bell
3 Technopolymer fixing nut
4 Technopolymer knob
5 Brass register screw
6 Brass female screw
7 Steel register spring
8 Rolling diaphragm
9 NBR relieving diaphragm
10 Shutter with vulcanized NBR seal
11 Technopolymer filter ring
12 Technopolymer bowl
13 Technopolymer condensate drain
14 PE filter cartridge
15 Technopolymer slinger
16 NBR O-ring
17 Brass threaded insert

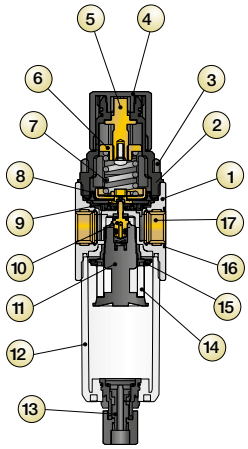

FLUID	Compressed Air	
THREAD	1/8" NPTF 1/4" NPTF	
REGULATION RANGE	0-29 psi 0-58 psi 0-116 psi (standard) 0-174 psi	
FILTRATION GRADE	5 µm 20 µm STANDARD 50 µm	
6 bar FLOW RATE with Δp 1 bar	600 Nl/min	
MAX PRESSURE	217 psi (15 bar)	
TEMPERATURE	41 °F (5 °C) 122 °F (50 °C)	
ASSEMBLY POSITION	Vertical	
BOWL CAPACITY	17.5 cm³	
CONDENSATION EXHAUST	Manual	Semi Automatic
Gauge THREAD	G 1/8	

Part Numbering System

Code	Size	Thread	Filtration	Regulation	Condensate exhaust	Flow Rate
N 0 3 0	0	0 3	2	3	1	0 0 0
		02 = 1/8 03 = 1/4	1 = 5 µm 2 = 20 µm 3 = 50 µm	1 = 0÷2 bar 2 = 0÷4 bar 3 = 0÷8 bar 4 = 0÷12 bar	1 = Semi Automatic Manual	600 Nl/min

N030 Mini



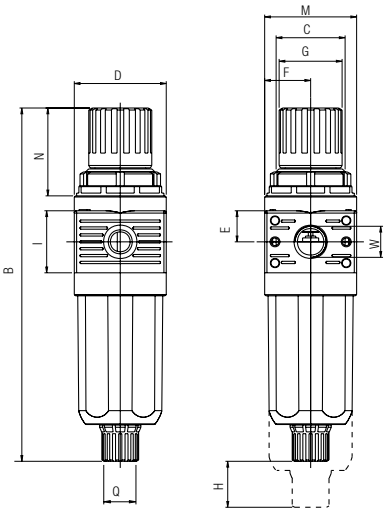

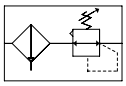

Dimensions

B	C	D	E	F	G	H	I	M	N	W
156	M30X1.5	40	13.5	20	27.5	11	27	40	40	1/8 - 1/4"

Code	Size	Thread (NPTF)	Filtration	Regulation	Flow Rate (NPTF)
N030 002 231 000	FR 0	1/8	20µm	0-116 psi	600 Nl/min
N030 003 231 000	FR 0	1/4"	20µm	0-116 psi	600 Nl/min

N040 MINI LUBRICATOR

TECHNICAL CHARACTERISTICS

Reference standard

1907/2006 REACH
2011/65/CE RoHS
PED 2014/68/UE

Component Parts and Materials

1 Technopolymer body
2 Technopolymer bowl
3 Brass threaded insert
4 Venturi diaphragm device
5 PA11 oil aspiration tube
6 Small filter
7 Transparent technopolymer sight dome
8 Brass oil flow regulating pin
9 Brass oil filling plug
10 Brass air diffuser
11 NBR O-ring

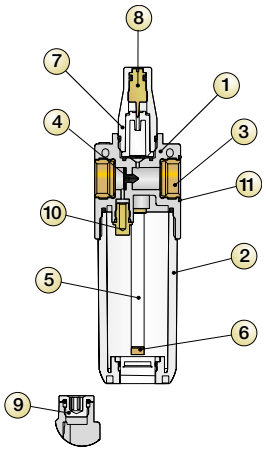

FLUID	Compressed Air
THREAD	1/8" NPTF 1/4" NPTF
6 bar FLOW RATE with Δp 1 bar	700 Nl/min
MAX PRESSURE	217 psi (15 bar)
TEMPERATURE	14 °F (-10 °C) 122 °F (50 °C)
WALL CLAMPING SCREWS	M3
ASSEMBLY POSITION	Vertical
BOWL CAPACITY	28 cm^3
RECOMMENDED OILS	ISO VG 22A CLASS ISO 3448 NORMA

Part Numbering System

Code	Size	Thread	Flow Rate	Oil loading System
N 0 4 0	0	0 2	0 0 0	1 0 0
		02 = 1/8 03 = 1/4	700 Nl/min	1 = Manual

N040 Mini



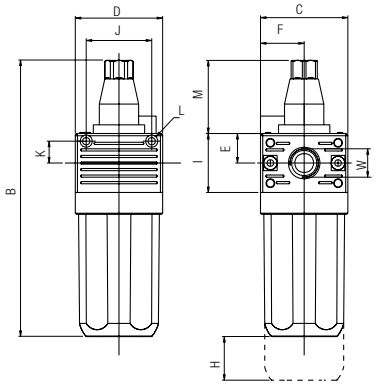



Dimensions

B	C	D	E	F	H	I	J	K	L	M	W
130	40	40	13.5	20	11	27	30	10	Ø X M3	33.5	1/8 - 1/4"

Code	Size	Thread (NPTF)	Flow Rate (NPTF)
N040 002 000 100	LUB 0	1/8	700 Nl/min
N040 003 000 100	LUB 0	1/4"	700 Nl/min

N100 MINI FILTER REGULATOR + LUBRICATOR

TECHNICAL CHARACTERISTICS

Reference standard

1907/2006 REACH
2011/65/CE RoHS
PED 2014/68/UE

FLUID	Compressed Air
THREAD	1/8" NPTF 1/4" NPTF
FILTRATION GRADE	5 µm 20 µm STANDARD 50 µm
REGULATION RANGE	0-29 psi 0-58 psi 0-116 psi (standard) 0-174 psi
6 bar FLOW RATE with Δp 1 bar	260 Nl/min
MAX PRESSURE	217 psi (15 bar)
TEMPERATURE	14 °F (-10 °C) 122 °F (50 °C)
WALL CLAMPING SCREWS	M3
ASSEMBLY POSITION	Vertical
BOWL CAPACITY	28 cm³
RECOMMENDED OILS	ISO VG 22A CLASS ISO 3448 NORMA

Part Numbering System

Code	Size	Thread	Filtration	Regulation	Condensate exhaust	Oil loading System	Flow Rate
N100	0	03	2	3	1	1	00
		02 = 1/8 03 = 1/4	1 = 5 µm 2 = 20 µm 3 = 50 µm	1 = 0÷2 bar 2 = 0÷4 bar 3 = 0÷8 bar 4 = 0÷12 bar	1 = Semi Automatic Manual	1 = Manual	260 Nl/min

N100 Mini

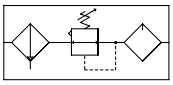



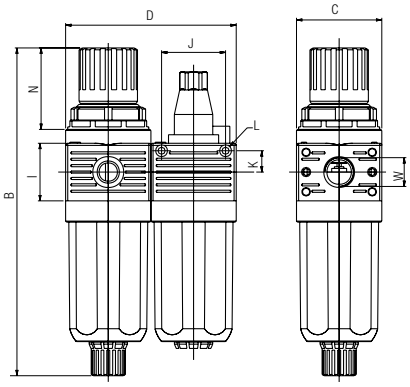

Dimensions

B	C	D	I	J	K	L	N	W
156	40	80	27	30	10	Ø X M3	40	1/8 - 1/4"

Code	Size	Thread (NPTF)	Filtration	Regulation	Flow Rate (NPTF)
N100 002 231 100	FR+L 0	1/8	20µm	0-116 psi	260 Nl/min
N100 003 231 100	FR+L 0	1/4"	20µm	0-116 psi	260 Nl/min

N400 MINI — FILTER + FILTER COALESCER

TECHNICAL CHARACTERISTICS

Reference standard

1907/2006 REACH
2011/65/CE RoHS
PED 2014/68/UE

FLUID	Compressed Air
THREAD	1/8" NPTF 1/4" NPTF
FILTRATION GRADE	5 µm + 0.01 µm
6 bar FLOW RATE with Δp 1 bar	370 Nl/min
MAX PRESSURE	217 psi (15 bar)
TEMPERATURE	14 °F (-10 °C) 122 °F (50 °C)
WALL CLAMPING SCREWS	M3
ASSEMBLY POSITION	Vertical

Part Numbering System

Code	Size	Thread	Filtration		Condensate exhaust	Flow Rate		
N 4 0 0	0	0 3	4	0	1	0	0	0
		02 = 1/8 03 = 1/4	4 = 0.01 µm		1 = Semi Automatic Manual	370 Nl/min		

Information

The coalescer cartridge is made of a microfiber inner layer with an external stainless steel structure.

The coalescing cartridge uses inertial impact, interception, and coalescence to collect excess liquid. This liquid will then drain into the bottom of the bowl.

The coalescing filter is used as oil separator which removes oil-vapors from the air output.

We recommend installing a 5 µm filter upstream to protect the coalescing filter from choking the cartridge.

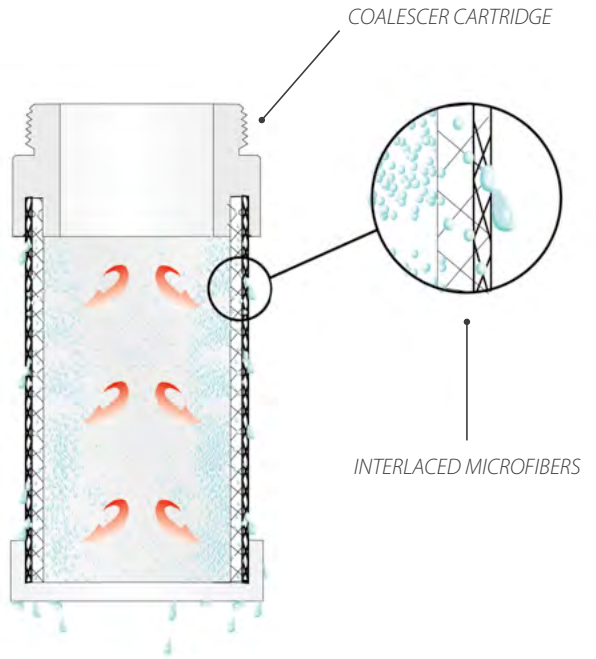

N400 Mini



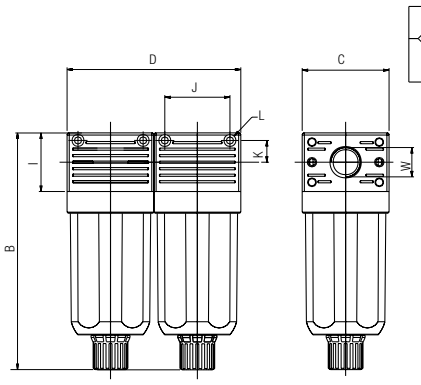

Dimensions

B	C	D	I	J	K	L	W
109	40	80	27	30	10	Ø X M3	1/8 - 1/4"

Code	Size	Thread (NPTF)	Filtration	Flow Rate (NPTF)
N400 002 401 000	FIL+FC 0	1/8	5µm + 0.01µm	370 Nl/min
N400 003 401 000	FIL+FC 0	1/4"	5µm + 0.01µm	370 Nl/min

FRL ACCESSORIES

T500
CONNECTION PLATE



Code	
T500 000 000 000	FRL 0

T520
BOWL FOR FILTER UNIT



Code	
T520 000 001 000	FRL 0

T530
BOWL FOR LUBRICATOR UNIT



Code	
T530 000 000 100	FRL 0

T545
COALESCER FILTER



Code	
T545 000 000 000	FRL 0

DIS00

AIR DISTRIBUTOR

Code		A	B	C	D
DIS00 001 100 NE	FRL 0	27	40	1/8	30



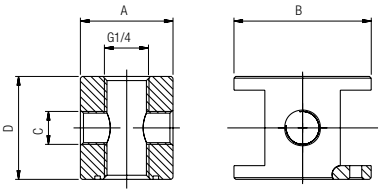

FIL04

SINTERED FILTER

Code		
FIL04 003 805 SC	FRL 0	5 µm
FIL04 003 820 SC	FRL 0	20 µm
FIL04 003 850 SC	FRL 0	50 µm



REG06

REGISTER SPRING

Code		
REG06 005 401 SC	FRL 0	0-29 psi
REG06 005 402 SC	FRL 0	0-58 psi
REG06 005 403 SC	FRL 0	0-116 psi (standard)
REG06 005 404 SC	FRL 0	0-174 psi



REG09

MEMBRANE

Code	
REG09 001 700 SC	FRL 0



REG16

CLAMP BRACKET



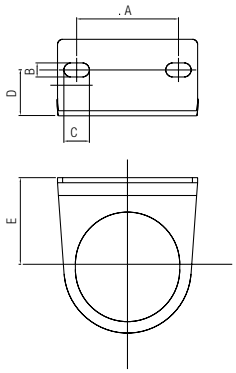

Code		A	B	C	D	E
REG16 005 000 NE	FRL 0	21.5	5.5	12	15	31