FRL Mini Series



N010 Mini
Pag. 21.4



N015 Mini
Pag. 21.6



N020 Mini
Pag. 21.8



N070 Mini
Pag. 21.10



N080 Mini
Pag. 21.12



N030 Mini
Pag. 21.14



N040 Mini
Pag. 21.16



N100 Mini
Pag. 21.18



N400 Mini
Pag. 21.20



Accessories
Pag. 21.22

FRL Evo Series



N010
Pag. 21.29



N015
Pag. 21.31



N016
Pag. 21.33



N020
Pag. 21.35



N022
Pag. 21.37



N025
Pag. 21.40



N030
Pag. 21.42



N040
Pag. 21.44



N050
Pag. 21.46



N051
Pag. 21.50



N052
Pag. 21.52



N060
Pag. 21.54



N090
Pag. 21.56



N100
Pag. 21.58



N400
Pag. 21.60



Accessories
Pag. 21.62

Click here to view the FRL Mini Series on our Website

Click here to view the FRL Evo Series on our Website

AIGNEP

AIR TREATMENT UNIT



FRL Series

TECHNICAL CHARACTERISTICS FRL 1-2-3

Basic Assembly

The "FRL Evo" line is modular and the connection between each unit is simplified thanks to the connection brackets. The assembly of the modules may change according to individual use. To operate, make sure the shut off valve is in the first position and the soft start valve is in the last. There is an arrow on every unit that indicates the correct direction of air flow.

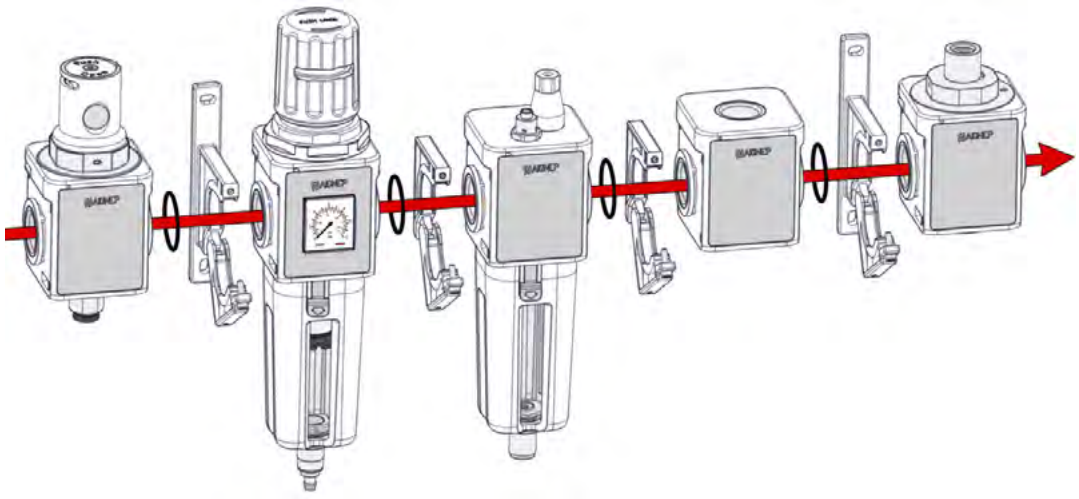

Mounting Instructions

Two types of mounting brackets are available for the FRL Evo Series to give the end user different mounting options.

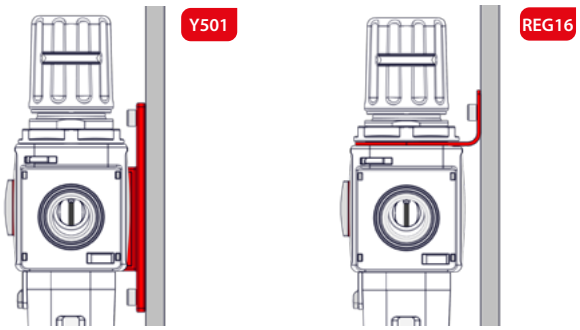

Removing the Bowl

To release to bowl, press down the button with the arrow and rotate the bowl clock-wise as shown in the drawing, then pull downward. The windows on the bowl allow you to see the level of condensation in the filter, or the amount of oil in the lubricator.

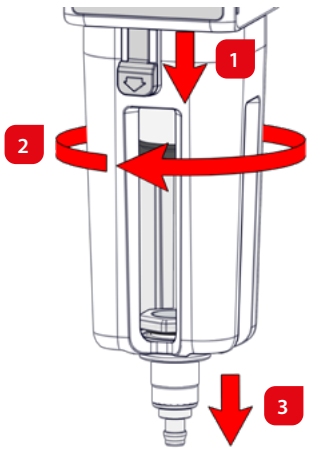

Shut Off Valves

3 versions of the Shut Off Valves are available: There are 3 available versions for the shut off valve manual with lock and anti-tampering system, pneumatic, and electro-pneumatic.

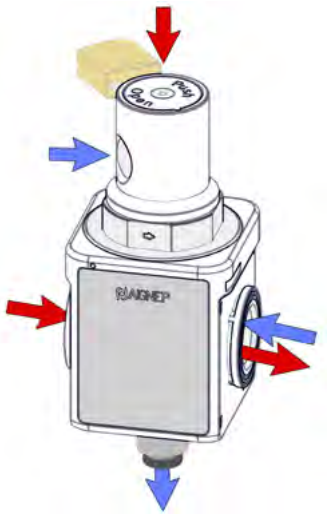

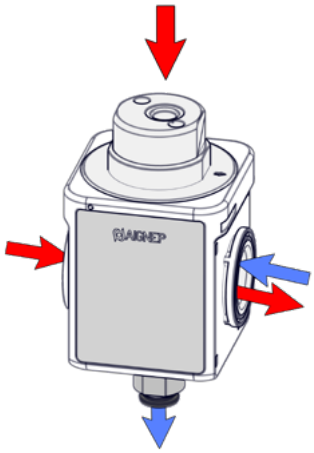

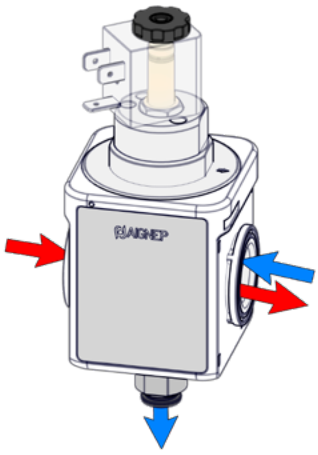

Regulators

Regulators are available with a built-in Gauge or without. The adjusting knobs can lock into place and come with an anti-tampering system. Assembly kits for 1/8" Gauges are available upon request.

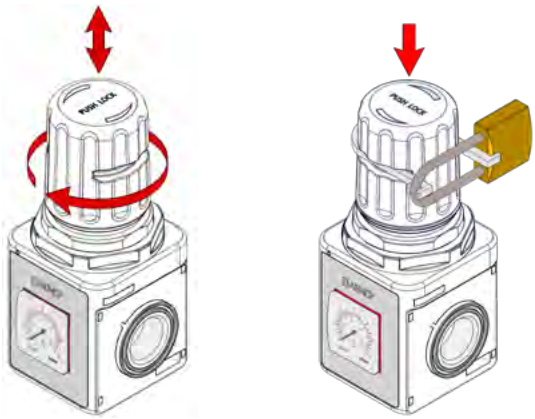

Regulators

Regulators can be assembled together. Whether they have the built-in Gauge or not, they can all be connected.

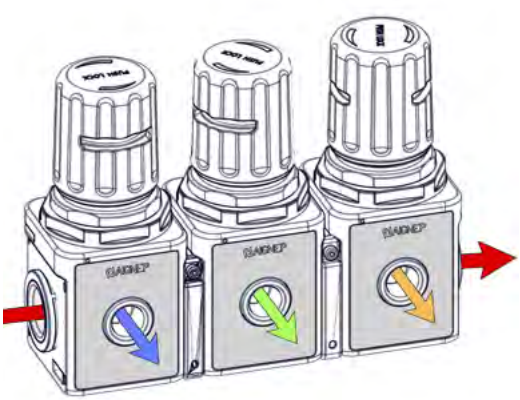

Regulators

Several options of Gauges and pressure switches are available. Gauges and pressure switches can be inverted if desired. (Y020 - Y030)

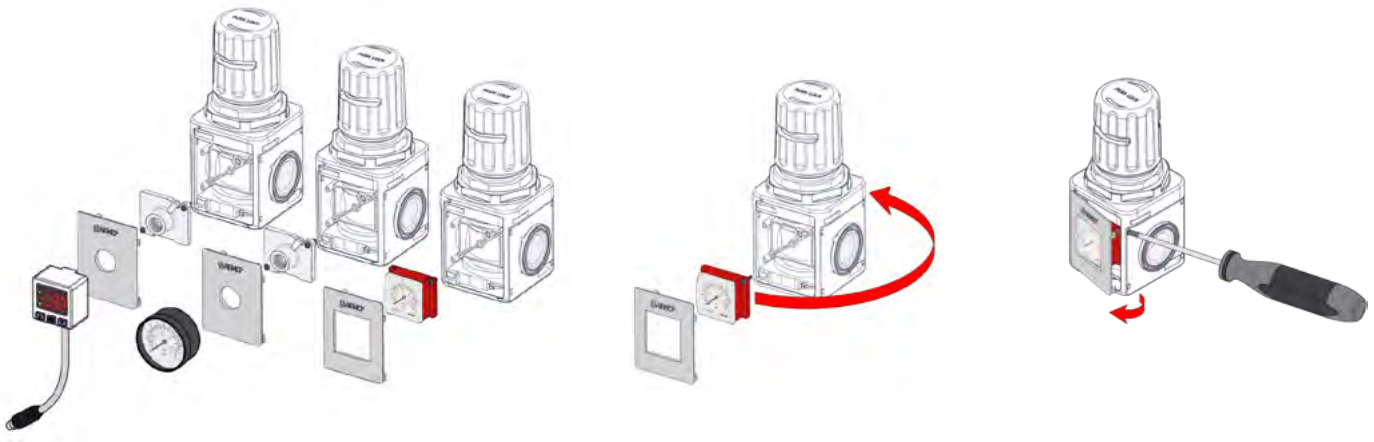

Condensation Drains

There are 2 available options for the condensation drain, with depressure drain *or automatic with float.*

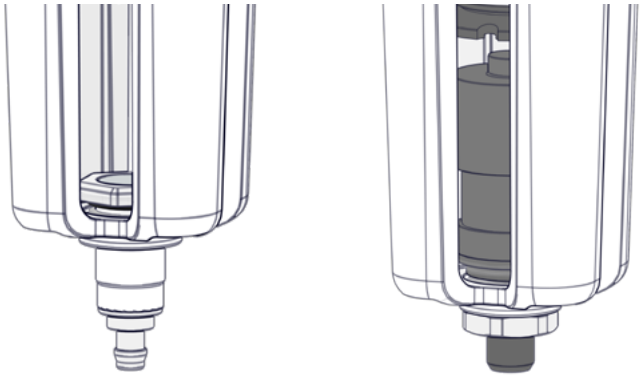

Coalescer Filter

20 µm, 5 µm filters, and 0.01 µm coalescer filter.

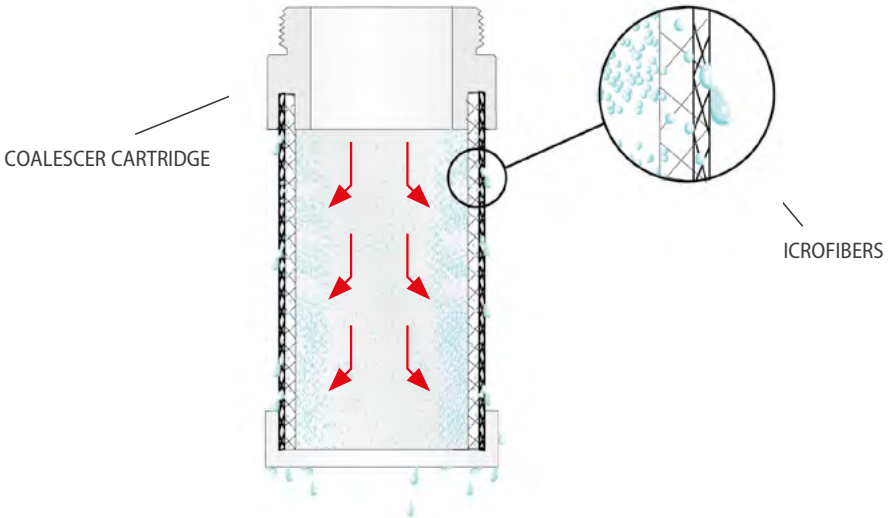

Lubricators

There are 2 available options for the lubricator unit, with manual loading or with automatic vacuum-operated loading.

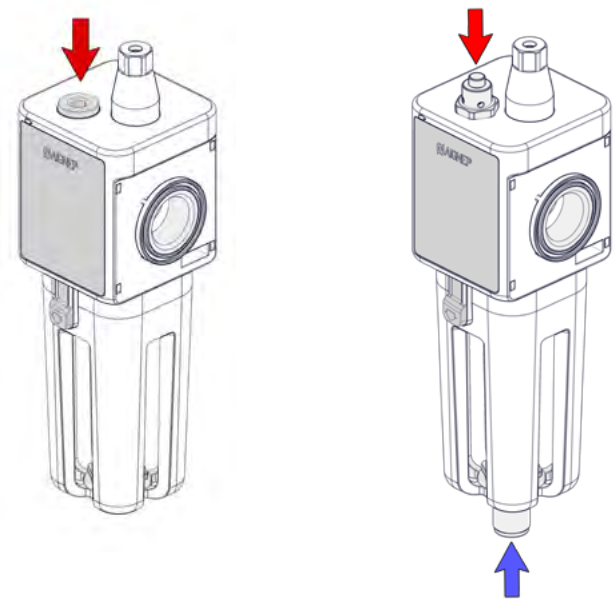

Soft Start Valve

Soft start valve with adjustment screw.

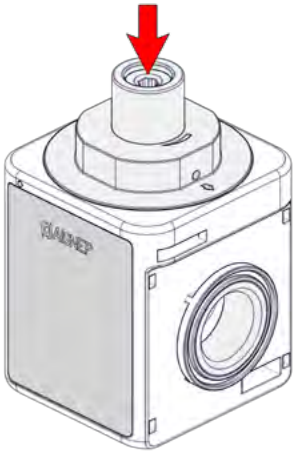

N010 FILTER

TECHNICAL CHARACTERISTICS

Reference standard

1907/2006 REACH ✓ | 2011/65/CE RoHS | PED 2014/68/UE | II 2GD Ex h TX

	FRL 1	FRL 2	FRL 3
METALLIC THREAD	1/4" NPTF 3/8" NPTF	3/8" NPTF 1/2" NPTF	3/4" NPTF 1" NPTF
TORQUE SPECIFICATIONS	Max 15 Nm	Max 20 Nm	Max 50 Nm
6 bar FLOW RATE with Δp 1 bar	2500 Nl/min *(88.2 cfm)*	4100 Nl/min *(144.7 cfm)*	7900 Nl/min *(278.9 cfm)*
MOUNTING SCREWS	M5 x 15	M5 x 15	M6 x 15
BOWL CAPACITY	28 cm^3	37 cm^3	151 cm^3
FILTRATION GRADE		5 µm 20 µm STANDARD	
FLUID		Compressed Air	
MAX PRESSURE	217 psi (15 bar)	217 psi (15 bar)	188 psi (13 bar)
TEMPERATURE		14 °F (-10 °C) 122 °F (50 °C)	
MOUNTING POSITION		Vertical	

Part Numbering System

Code	Size	Thread	Filtration		Condensate exhaust	-		
N 0 1 0	1	0 3	1	0	1	0	0	0

FRL 1 →
- 03 = 1/4"
- 04 = 3/8"

FRL 2 →
- 04 = 3/8"
- 05 = 1/2"

FRL 3 →
- 07 = 3/4"
- 09 = 1"

Filtration:
- 1 = 5 µm
- 2 = 20 µm

Condensate exhaust:
- 1 = Depressure drain
- 2 = Automatic with float (max 8 bar)

N010



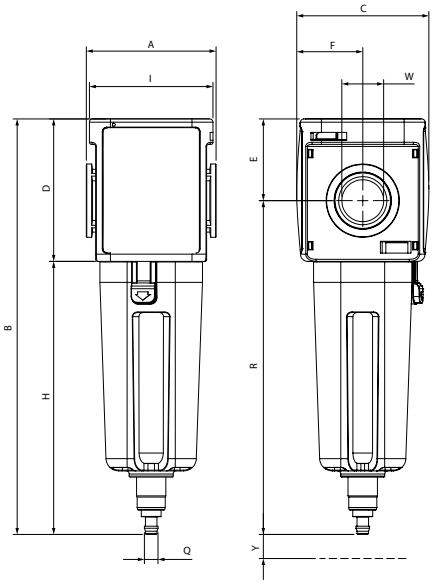

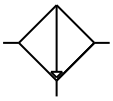

Dimensions (mm) - FRL 1

A	B	C	D	W	E	F	H	I	Q	R	Y
51	176	51	57	1/4" - 3/8"	32.5	25.5	119	47.5	E.D .256 (6.5)	144	7

Dimensions (mm) - FRL 2

A	B	C	D	W	E	F	H	I	Q	R	Y
62	197.5	63	68	3/8" - 1/2"	39	31.5	129.5	59	E.D .256 (6.5)	158.5	9.5

Dimensions (mm) - FRL 3

A	B	C	D	W	E	F	H	I	Q	R	Y
90	250	92	89	3/4" - 1"	47	46	161	77.5	E.D .256 (6.5)	203	70

DEP = Vacuum-operated **A = Automatic**

Code	Size	Thread (NPTF)	Filtration	Flow Rate	Exhaust
N010 103 201 000	FIL 1	1/4"	20 µm	2500 Nl/min *(88.2 cfm)*	DEP
N010 104 201 000	FIL 1	3/8"	20 µm	2500 Nl/min *(88.2 cfm)*	DEP
N010 104 202 000	FIL 1	3/8"	20 µm	2500 Nl/min *(88.2 cfm)*	A
N010 204 201 000	FIL 2	3/8"	20 µm	4100 Nl/min *(144.7 cfm)*	DEP
N010 205 201 000	FIL 2	1/2"	20 µm	4100 Nl/min *(144.7 cfm)*	DEP
N010 205 202 000	FIL 2	1/2"	20 µm	4100 Nl/min *(144.7 cfm)*	A
N010 307 201 000	FIL 3	3/4"	20 µm	7900 Nl/min *(278.9 cfm)*	DEP
N010 309 201 000	FIL 3	1"	20 µm	7900 Nl/min *(278.9 cfm)*	DEP
N010 309 202 000	FIL 3	1"	20 µm	7900 Nl/min *(278.9 cfm)*	A

Condensation Drain

DEP: *The depressure drain condensation drain is normally in the open position. It automatically drains the condensation when there is no pressure in the bowl. By pressing the hose connector, the condensation will get pressurized and drained.*

A: *The automatic condensation drain with float drains the condensation when the maximum level is reached independently from the air pressure in the system.*

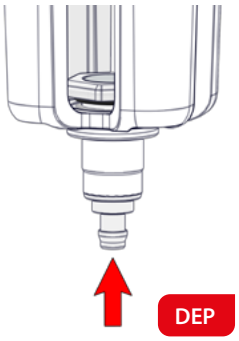

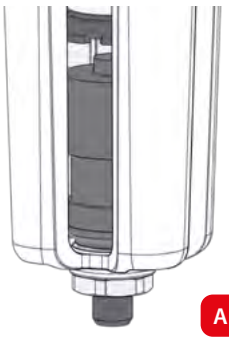

N015 COALESCER FILTER

TECHNICAL CHARACTERISTICS

Reference standard

1907/2006 REACH ✓ | 2011/65/CE RoHS ✓ | PED 2014/68/UE | II 2GD Ex h TX

	FRL 1	FRL 2	FRL 3
METALLIC THREAD	1/4" NPTF 3/8" NPTF	3/8" NPTF 1/2" NPTF	3/4" NPTF 1" NPTF
TORQUE SPECIFICATIONS	Max 15 Nm	Max 20 Nm	Max 50 Nm
6 bar FLOW RATE with Δp 1 bar	600 Nl/min *(21.1 cfm)*	750 Nl/min *(26.4 cfm)*	1400 Nl/min *(49.4 cfm)*
MOUNTING SCREWS	M5 x 15	M5 x 15	M6 x 15
BOWL CAPACITY	28 cm³	37 cm³	151 cm³
FILTRATION GRADE	0.01 µm		
FLUID	5 µm filtered Compressed Air		
MAX PRESSURE	217 psi (15 bar)	217 psi (15 bar)	188 psi (13 bar)
TEMPERATURE	14 °F (-10 °C) 122 °F (50 °C)		
MOUNTING POSITION	Vertical		

Part Numbering System

NB: With Coalescer Filter Series N015, we recommend installing a 5 µm Filter upstream.

Code	Size	Thread	Filtration		Condensate exhaust	-		
N 0 1 5	1	0 3	4	0	1	0	0	0

FRL 1 → 03 = 1/4; 04 = 3/8

FRL 2 → 04 = 3/8; 05 = 1/2

FRL 3 → 07 = 3/4; 09 = 1

04 = 0,01 µm

1 = Depressure drain
2 = Automatic with float (max 8 bar)

N015



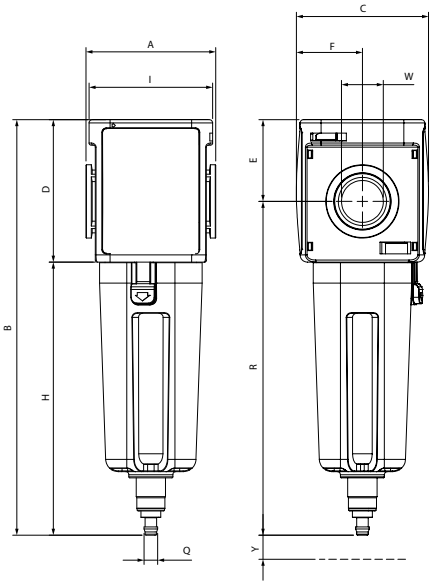

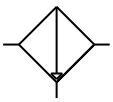

Dimensions (mm) - FRL 1

A	B	C	D	W	E	F	H	I	Q	R	Y
51	176	51	57	1/4" - 3/8"	32.5	25.5	119	47.5	E.D .256 (6.5)	144	7

Dimensions (mm) - FRL 2

A	B	C	D	W	E	F	H	I	Q	R	Y
62	197.5	63	68	3/8" - 1/2"	39	31.5	129.5	59	E.D .256 (6.5)	158.5	9.5

Dimensions (mm) - FRL 3

A	B	C	D	W	E	F	H	I	Q	R	Y
90	250	92	89	3/4" - 1"	47	46	161	77.5	E.D .256 (6.5)	203	70

DEP = Vacuum-operated

Code	Size	Thread (NPTF)	Filtration	Flow Rate	Exhaust
N015 103 401 000	FC 1	1/4"	0.01 µm	600 Nl/min *(21.1 cfm)*	DEP
N015 104 401 000	FC 1	3/8"	0.01 µm	600 Nl/min *(21.1 cfm)*	DEP
N015 104 402 000	FC 1	3/8"	0.01 µm	600 Nl/min *(21.1 cfm)*	A
N015 204 401 000	FC 2	3/8"	0.01 µm	750 Nl/min *(26.4 cfm)*	DEP
N015 205 401 000	FC 2	1/2"	0.01 µm	750 Nl/min *(26.4 cfm)*	DEP
N015 205 402 000	FC 2	1/2"	0.01 µm	750 Nl/min *(26.4 cfm)*	A
N015 307 401 000	FC 3	3/4"	0.01 µm	1400 Nl/min *(49.4 cfm)*	DEP
N015 309 401 000	FC 3	1"	0.01 µm	1400 Nl/min *(49.4 cfm)*	DEP
N015 309 402 000	FC 3	1"	0.01 µm	1400 Nl/min *(49.4 cfm)*	A

Coalescer Cartridge

The coalescer cartridge is made of a microfiber layer with an external stainless steel structure. The coalescer cartridge uses inertial impact, interception, and coalescence to form liquid particles into drops. These drops will fall into the bottom of the bowl. The coalescer filter is used as an oil separator which removes oil vapors from the air output. We recommend installing a 5 µm filter upstream to protect the coalescing filter from choking the cartridge.

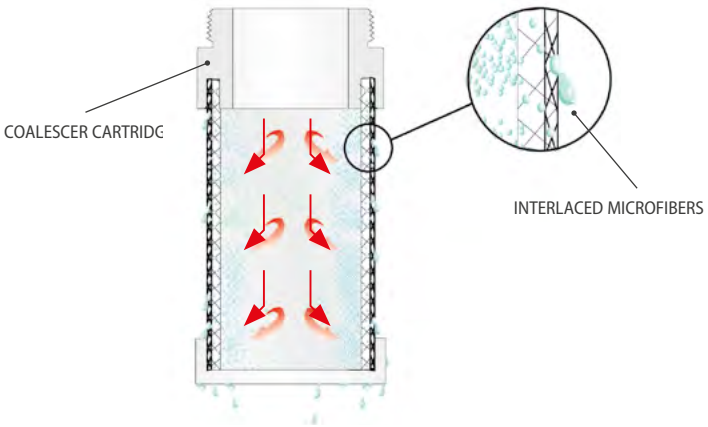

N016 ACTIVE CARBON FILTER

TECHNICAL CHARACTERISTICS

Reference standard

1907/2006 REACH
2011/65/CE RoHS
PED 2014/68/UE
II 2GD Ex h TX

	FRL 1	FRL 2	FRL 3
METALLIC THREAD	1/4" NPTF 3/8" NPTF	3/8" NPTF 1/2" NPTF	3/4" NPTF 1" NPTF
TORQUE SPECIFICATIONS	Max 15 Nm	Max 20 Nm	Max 50 Nm
6 bar FLOW RATE with Δp 1 bar	1270 Nl/min *(44.8 cfm)*	1810 Nl/min *(63.9 cfm)*	3500 Nl/min *(123.6 cfm)*
MOUNTING SCREWS	M5 x 15	M5 x 15	M6 x 15
BOWL CAPACITY	28 cm^3	37 cm^3	151 cm^3
DEGREE OF FILTRATION: ISO 8573	Output oil concentration < 0.005 mg/m3		
FLUID	0.01 µm Filtered Compressed Air		
MAX PRESSURE	217 psi (15 bar)	217 psi (15 bar)	188 psi (13 bar)
TEMPERATURE	34.7 °F (1.5 °C) 122 °F (50 °C)		
MOUNTING POSITION	Vertical		

Part Numbering System

NB: With Coalescer Filter Series N015, we recommend installing a 5 µm Filter upstream.

Code	Size	Thread	Filtration		Condensate exhaust	-		
N 0 1 6	1	0 3	5	0	1	0	0	0
	FRL 1 →	03 = 1/4" 04 = 3/8"	05 = <0.005 mg/m3		1 = Depressure drain			
	FRL 2 →	04 = 3/8" 05 = 1/2"						
	FRL 3 →	07 = 3/4" 09 = 1"						

N016



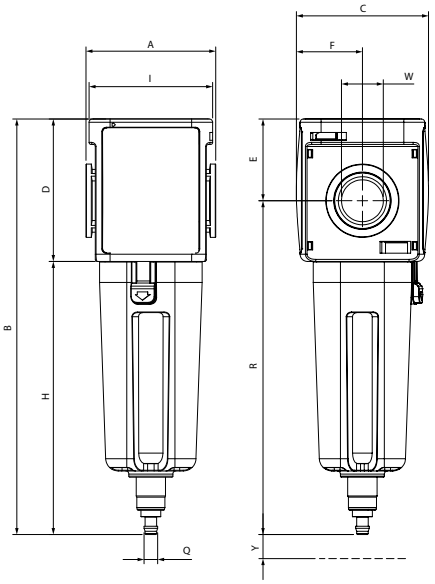

Dimensions (mm) - FRL 1

A	B	C	D	W	E	F	H	I	Q	R	Y
51	176	51	57	1/4" - 3/8"	32.5	25.5	119	47.5	E.D .256 (6.5)	144	7

Dimensions (mm) - FRL 2

A	B	C	D	W	E	F	H	I	Q	R	Y
62	197.5	63	68	3/8" - 1/2"	39	31.5	129.5	59	E.D .256 (6.5)	158.5	9.5

Dimensions (mm) - FRL 3

A	B	C	D	W	E	F	H	I	Q	R	Y
90	250	92	89	3/4" - 1"	47	46	161	77.5	E.D .256 (6.5)	203	70

DEP = Vacuum-operated

Code	Size	Thread (NPTF)	Filtration	Flow Rate	Exhaust
N016 103 501 000	AC 1	1/4"	< 0.005 mg/m³	1270 Nl/min *(44.8 cfm)*	DEP
N016 104 501 000	AC 1	3/8"	< 0.005 mg/m³	1270 Nl/min *(44.8 cfm)*	DEP
N016 204 501 000	AC 2	3/8"	< 0.005 mg/m³	1810 Nl/min *(63.9 cfm)*	DEP
N016 205 501 000	AC 2	1/2"	< 0.005 mg/m³	1810 Nl/min *(63.9 cfm)*	DEP
N016 307 501 000	AC 3	3/4"	< 0.005 mg/m³	3500 Nl/min *(123.6 cfm)*	DEP
N016 309 501 000	AC 3	1"	< 0.005 mg/m³	3500 Nl/min *(123.6 cfm)*	DEP

It's recommended to replace the activated carbon filter (Cod. T546) every 6 months.

Condensation Drain

DEP: *The depressure drain condensation drain is normally in the open position. It automatically drains the condensation when there is no pressure in the bowl. By pressing the hose connector, the condensation will get pressurized and drained.*

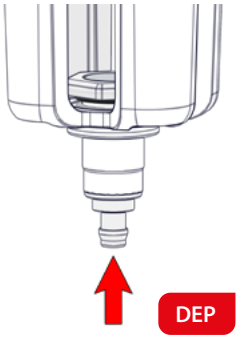

N020 REGULATOR

TECHNICAL CHARACTERISTICS

Reference standard

1907/2006 REACH ✓ | 2011/65/CE RoHS ✓ | PED 2014/68/UE | II 2GD Ex h TX

	FRL 1	FRL 2	FRL 3
METALLIC THREAD	1/4" NPTF 3/8" NPTF	3/8" NPTF 1/2" NPTF	3/4" NPTF 1" NPTF
TORQUE SPECIFICATIONS	Max 15 Nm	Max 20 Nm	Max 50 Nm
6 bar FLOW RATE with Δp 1 bar	2600 Nl/min *(91.8 cfm)*	4000 Nl/min *(141.2 cfm)*	7700 Nl/min *(271.9 cfm)*
MOUNTING SCREWS	M5 x 15	M5 x 15	M6 x 15
REGULATION RANGE	0 ÷ 29 psi (2 bar) 0 ÷ 58 psi (4 bar) 0 ÷ 116 psi STANDARD (8 bar) 0 ÷ 174 psi (12 bar)		(FRL 1 - 2) (FRL 1 - 2) (FRL 1 - 2 - 3) (FRL 1 - 2 - 3)
FLUID	Compressed Air		
MAX PRESSURE	217 psi (15 bar)	217 psi (15 bar)	188 psi (13 bar)
TEMPERATURE	14 °F (-10 °C) 122 °F (50 °C)		
MOUNTING POSITION	Vertical		

Part Numbering System

Code	Size	Thread	Regulation	-	Manometer System
N 0 2 0	1	0 3	0 1 0		0 0 0

Size

- FRL 1 → 03 = 1/4; 04 = 3/8
- FRL 2 → 04 = 3/8; 05 = 1/2
- FRL 3 → 07 = 3/4; 09 = 1

Regulation

1 = 0÷2 bar (G1 -G2)
2 = 0÷4 bar (G1 - G2)
3 = 0÷8 bar (G1 - G2 - G3)
4 = 0÷12 bar (G1 - G2 - G3)

Manometer System

0 = Manometer incorporated
2 = Adapter for manometer 1/8 Gas (Manometer not included)

N020



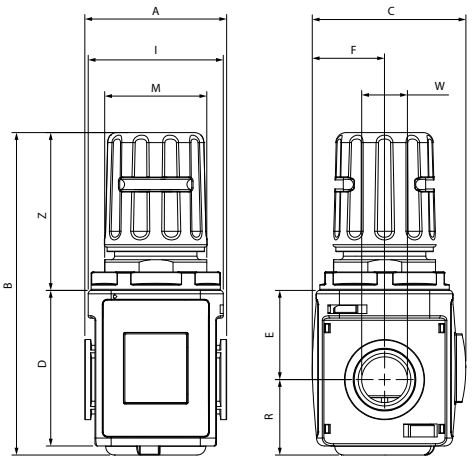

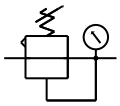

Dimensions (mm) - FRL 1

A	B	C	D	W	E	F	I	R	M	Z
51	117	57	57	1/4" - 3/8"	32.5	25.5	47.5	28	M37 x 1.5	57

Dimensions (mm) - FRL 2

A	B	C	D	W	E	F	I	R	M	Z
62	141.5	67	68	3/8" - 1/2"	39	31.5	59	33	M37 x 1.5	72.5

Dimensions (mm) - FRL 3

A	B	C	D	W	E	F	I	R	M	Z
90	178	96	89	3/4" - 1"	47	46	77.5	52	M59 x 1.5	79

Code	Size	Thread (NPTF)	Regulation	Flow Rate
N020 103 030 000	REG 1	1/4"	0 ÷ 116 psi (8 bar)	2600 Nl/min *(91.8 cfm)*
N020 104 030 000	REG 1	3/8"	0 ÷ 116 psi (8 bar)	2600 Nl/min *(91.8 cfm)*
N020 204 030 000	REG 2	3/8"	0 ÷ 116 psi (8 bar)	4000 Nl/min *(141.2 cfm)*
N020 205 030 000	REG 2	1/2"	0 ÷ 116 psi (8 bar)	4000 Nl/min *(141.2 cfm)*
N020 307 030 000	REG 3	3/4"	0 ÷ 116 psi (8 bar)	7700 Nl/min *(271.9 cfm)*
N020 309 030 000	REG 3	1"	0 ÷ 116 psi (8 bar)	7700 Nl/min *(271.9 cfm)*

FRL 1

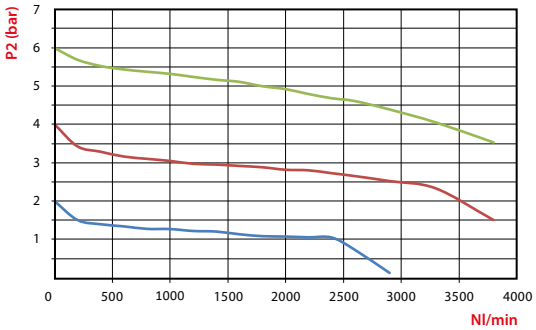

FRL 2

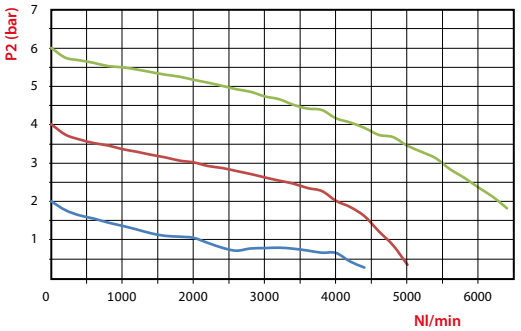

Regulating the Air Pressure

Follow the instructions below to set the air pressure:

1 Raise the knob to the regulating position.

2 Rotate to set the desired pressure, always in ascending order.

3 Press the knob down to lock into position.
The knob can be padlocked to prevent tampering.

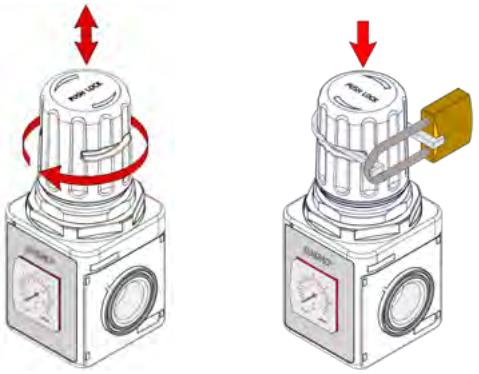

N022 REGULATOR

TECHNICAL CHARACTERISTICS

Reference standard

1907/2006 REACH
2011/65/CE
PED 2014/68/UE

	FRL 1	FRL 2
METALLIC THREAD	1/8" NPTF	1/4" NPTF
AIR CONSUMPTION WITH 10 bar	4.4 l/min (ANR) F.S. *(0.155 cfm)*	4.4 l/min (ANR) F.S. *(0.155 cfm)*
WALL CLAMPING SCREWS	M4 x 14 M8 x 14	M5 x 18 M9 x 18
MANOMETER FASTENING	1/8" NPTF	
REGULATION RANGE	0 ÷ 58 psi (4 bar) 0 ÷ 116 psi (8 bar)	
FLUID	Compressed Air	
MAX PRESSURE	145 psi (10 bar)	
TEMPERATURE	23 °F (-5 °C) 140 °F (60 °C) at 145 psi (10 bar)	
MOUNTING POSITION	Vertical	
CLAMP BRACKET FOR T022 (on request)	 Cod. REG32	

Part Numbering System

Code	Size	Thread	Regulation	-
N 0 2 2	1	0 3	0 2 0	0 0 0

FRL 1 → 02 = 1/8 NPTF
FRL 2 → 03 = 1/4 NPTF
FRL 3 → 05 = 1/2 NPTF

2 = 0 ÷ 4 bar (58 PSI)
3 = 0 ÷ 8 bar (116 PSI)

N022



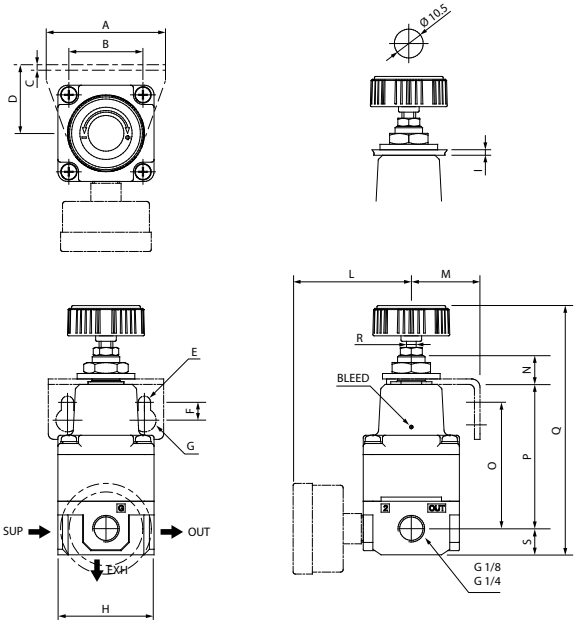

Code	Size	Thread (NPTF)	Regulation	Air consumption with 10 bar
N022 102 020 000	REGP 1	1/8"	0 ÷ 58 psi (4 bar)	4.4 l/min (ANR) F.S. *(0.155 cfm)*
N022 102 030 000	REGP 1	1/8"	0 ÷ 116 psi (8 bar)	4.4 l/min (ANR) F.S. *(0.155 cfm)*
N022 203 020 000	REGP 2	1/4"	0 ÷ 58 psi (4 bar)	4.4 l/min (ANR) F.S. *(0.155 cfm)*
N022 203 030 000	REGP 2	1/4"	0 ÷ 116 psi (8 bar)	4.4 l/min (ANR) F.S. *(0.155 cfm)*
N022 305 020 000	REGP 3	1/2"	0 ÷ 58 psi (4 bar)	11.5 l/min (ANR) F.S. *(0.406 cfm)*
N022 305 030 000	REGP 3	1/2"	0 ÷ 116 psi (8 bar)	11.5 l/min (ANR) F.S. *(0.406 cfm)*

N504

SIDE HITCH ADAPTER KIT "UNIVERSAL SHORT"

Code		G
N504 100 000 000	FRL 1	1/4
N504 200 000 000	FRL 2	1/2

It's recommended to use the sealant on the thread.



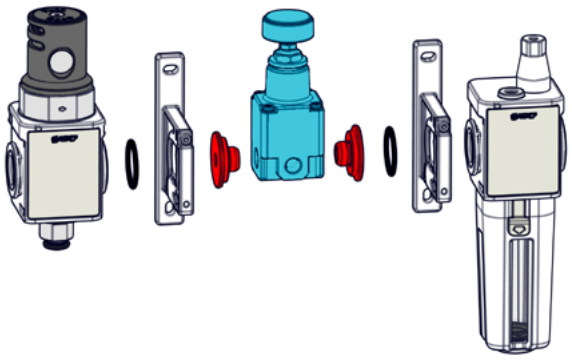

Dimensions

FRL 1-2

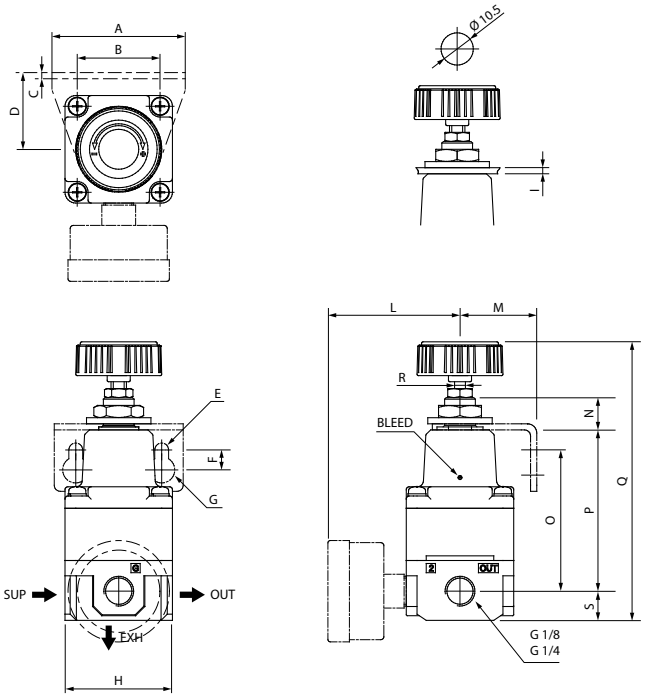

	FRL 1	FRL 2
A	42	50
B	28	36
C	2	2
D	25	30
E	Ø 4.5	Ø 5.5
F	6.5	7
G	Ø 8.5	Ø 9.5
H	35	59.2
I	Max 4	Max 4
L	43	55
M	25	30
N	10.5	11.3
O	46	53
P	52.5	71
Q	90.7	127.3
R	M5 x 0.5	M6 x 0.5
S	9.5	18.5

FRL 3

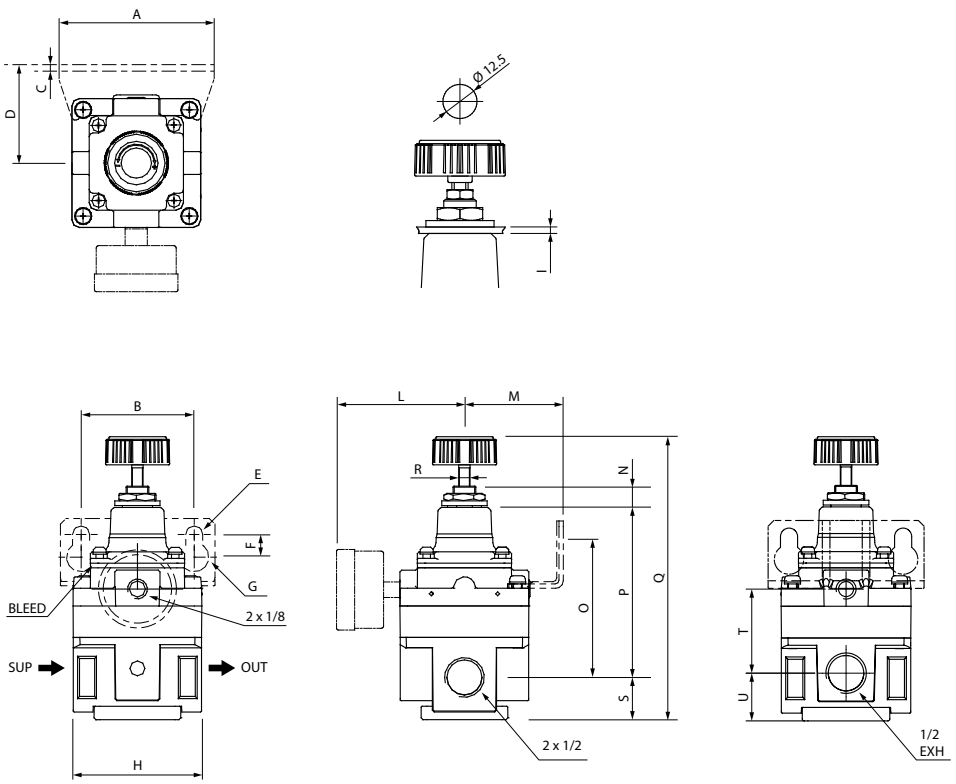

	FRL 3
A	82
B	60
C	2.3
D	52.45
E	Ø 9
F	12
G	Ø 15.5
H	68
I	Max 4
L	68
M	52.4
N	11.3
O	74.5
P	90.1
Q	150
R	Ø 6
S	22.4
T	44.2
U	25.1

P2 (bar)	Nl/min	20 °C 1 bar
Outlet pressure	Air flow	

Inlet pressure 7 bar

FRL 1

Flow feature

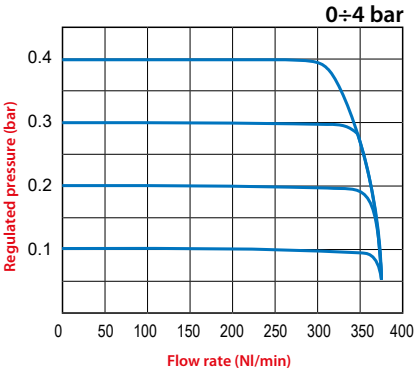

Relief characteristics

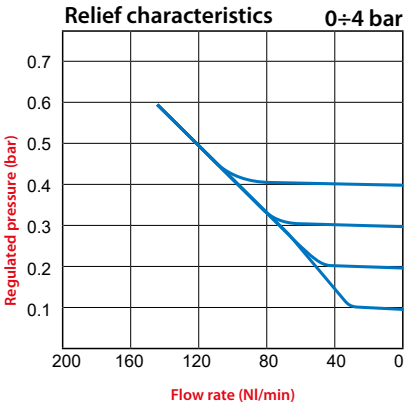

Pressure characteristics

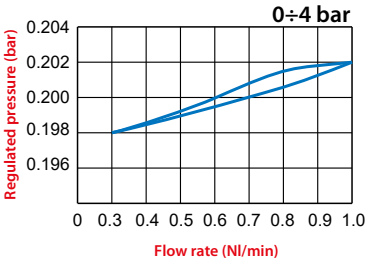

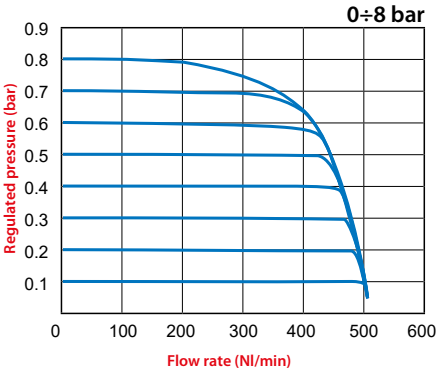

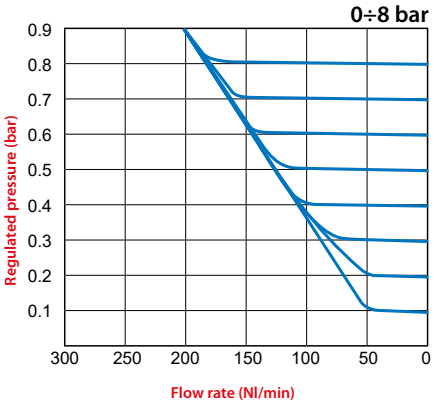

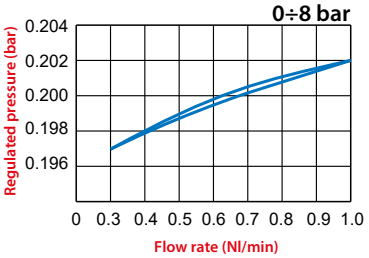

FRL 2

Flow feature

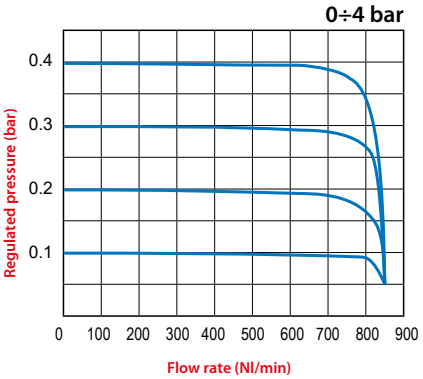

Relief characteristics

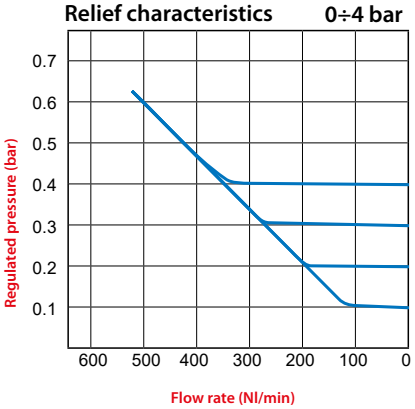

Pressure characteristics

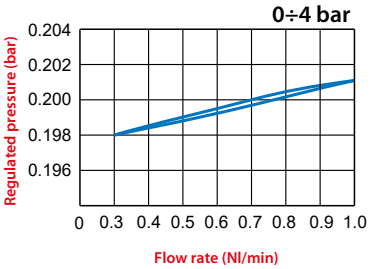

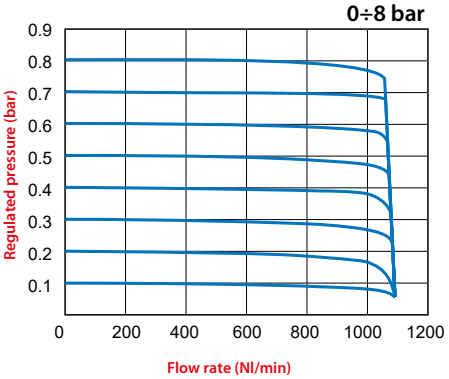

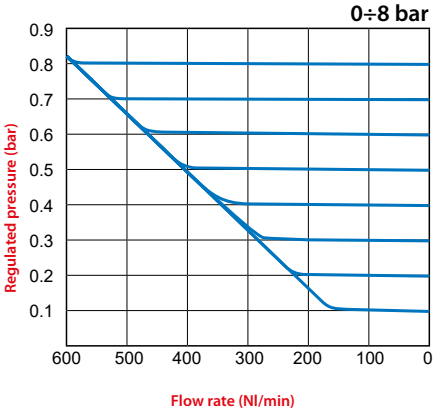

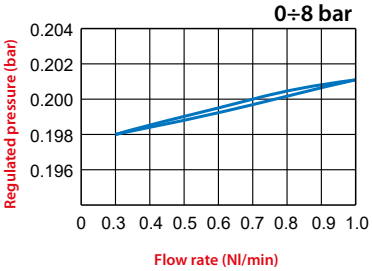

P2 (bar)	Nl/min	20 °C 1 bar
Outlet pressure	Air flow	

Inlet pressure	7 bar

FRL 3

Flow feature

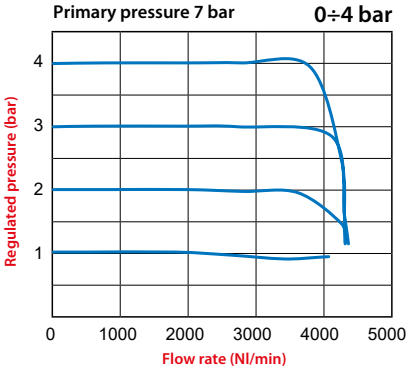

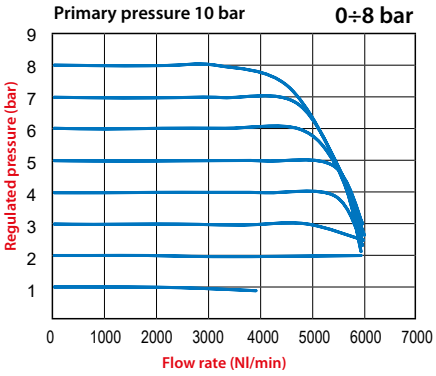

Relief characteristics

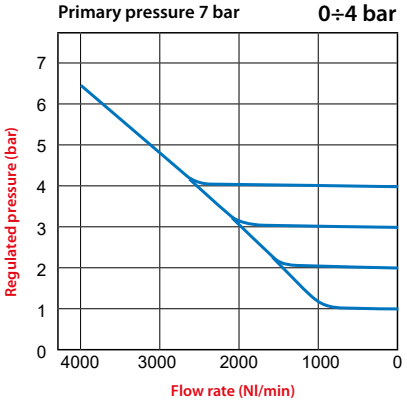

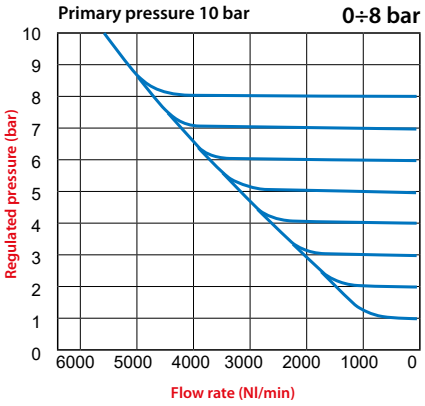

Pressure characteristics

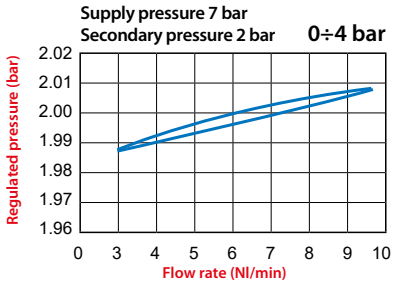

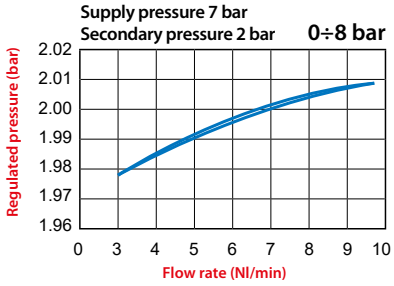

N025 FRONTAL REGULATOR

TECHNICAL CHARACTERISTICS

Reference standard

1907/2006 REACH
2011/65/CE RoHS
PED 2014/68/UE
II 2GD Ex h TX

	FRL 1	FRL 2
METALLIC THREAD	1/4" NPTF 3/8" NPTF	3/8" NPTF 1/2" NPTF
TORQUE SPECIFICATIONS	Max 15 Nm	Max 20 Nm
6 bar FLOW RATE with Δp 1 bar	2700 Nl/min *(95.3 cfm)*	3500 Nl/min *(123.6 cfm)*
MOUNTING SCREWS	M5 x 15	
REGULATION RANGE	0 ÷ 29 psi (2 bar) 0 ÷ 58 psi (4 bar) 0 ÷ 116 psi STANDARD (8 bar) 0 ÷ 174 psi (12 bar)	
FLUID	Compressed Air	
MAX PRESSURE	217 psi (15 bar)	
TEMPERATURE	14 °F (-10 °C) 122 °F (50 °C)	
MOUNTING POSITION	Vertical	
FRONT THREADED	1/8" NPTF	3/8" NPTF

Part Numbering System

Code	Size		Thread	Regulation	-	Manometer System
N 0 2 5	1		0 3	0 1 0		0 0 0
	FRL 1	→	03 = 1/4 04 = 3/8	1 = 0 ÷ 2 bar 2 = 0 ÷ 4 bar 3 = 0 ÷ 8 bar 4 = 0 ÷ 12 bar		0 = L→R From Left to Right - Manometer incorporated - *Front* 1 = R→L From Right to Left - Manometer incorporated - *Back* 2 = L→R From Left to Right - Adapter for manometer 1/8 Gas - *Front* 3 = R→L From Right to Left - Adapter for manometer 1/8 Gas - *Back*
	FRL 2	→	04 = 3/8 05 = 1/2			

N025

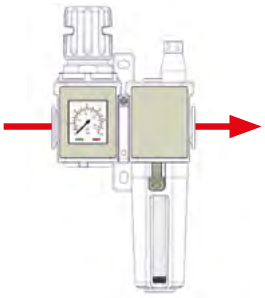

Left → Right

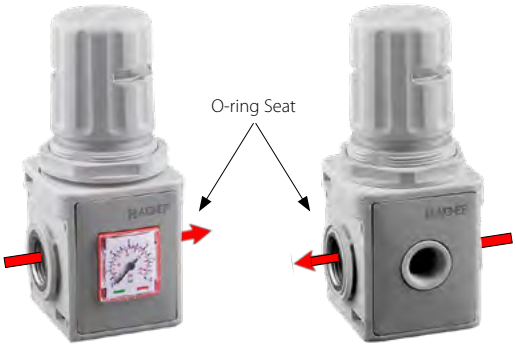

Standard code in stock	Size	Thread	Regulation	Flow Rate
N025 103 030 000	REG F 1	1/4"	0 ÷ 116 psi (8 bar)	2700 Nl/min *(95.3 cfm)*
N025 104 030 000	REG F 1	3/8"	0 ÷ 116 psi (8 bar)	2700 Nl/min *(95.3 cfm)*
N025 204 030 000	REG F 2	3/8"	0 ÷ 116 psi (8 bar)	3500 Nl/min *(123.6 cfm)*
N025 205 030 000	REG F 2	1/2"	0 ÷ 116 psi (8 bar)	3500 Nl/min *(123.6 cfm)*
Manometer incorporated - Front				

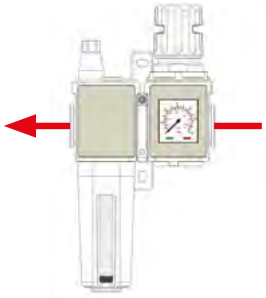

Right → Left



Standard code in stock	Size	Thread	Regulation	Flow Rate
N025 103 030 001	REG F 1	1/4"	0 ÷ 116 psi (8 bar)	2700 Nl/min *(95.3 cfm)*
N025 104 030 001	REG F 1	3/8"	0 ÷ 116 psi (8 bar)	2700 Nl/min *(95.3 cfm)*
N025 204 030 001	REG F 2	3/8"	0 ÷ 116 psi (8 bar)	3500 Nl/min *(123.6 cfm)*
N025 205 030 001	REG F 2	1/2"	0 ÷ 116 psi (8 bar)	3500 Nl/min *(123.6 cfm)*
Manometer incorporated - Back				

Regulating the Air Pressure

Follow the instructions below to set the air pressure:

1 Raise the knob to the regulating position.

2 Rotate to set the desired pressure, always in ascending order.

3 Press the knob down to lock into position.
The knob can be padlocked to prevent tampering.

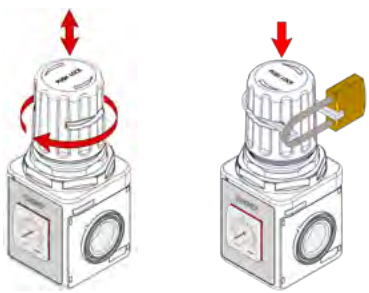

Regulators

Regulators can be assembled together. Whether they have the built-in Gauge or not, they all can be connected.



N030 FILTER REGULATOR

TECHNICAL CHARACTERISTICS

Reference standard

1907/2006 REACH ✓ | 2011/65/CE RoHS ✓ | PED 2014/68/UE | II 2GD Ex h TX

	FRL 1	FRL 2	FRL 3
METALLIC THREAD	1/4" NPTF 3/8" NPTF	3/8" NPTF 1/2" NPTF	3/4" NPTF 1" NPTF
TORQUE SPECIFICATIONS	Max 15 Nm	Max 20 Nm	Max 50 Nm
6 bar FLOW RATE with Δp 1 bar	2000 Nl/min *(70.6 cfm)*	3000 Nl/min *(105.9 cfm)*	5800 Nl/min *(204.8 cfm)*
MOUNTING SCREWS	M5 x 15	M5 x 15	M6 x 15
BOWL CAPACITY	28 cm³	37 cm³	151 cm³
FILTRATION GRADE	5 µm 20 µm STANDARD		
REGULATION RANGE	0 ÷ 29 psi (2 bar) (FRL 1 - 2) 0 ÷ 58 psi (4 bar) (FRL 1 - 2) 0 ÷ 116 psi STANDARD (8 bar) (FRL 1 - 2 - 3) 0 ÷ 174 psi (12 bar) (FRL 1 - 2 - 3)		
FLUID	Compressed Air		
MAX PRESSURE	217 psi (15 bar)	217 psi (15 bar)	188 psi (13 bar)
TEMPERATURE	14 °F (-10 °C) 122 °F (50 °C)		
MOUNTING POSITION	Vertical		

Part Numbering System

Code	Size	Thread	Filtration	Regulation	Exhaust	Manometer System
N 0 3 0	1	0 3	1	1	1	0 0 0
	FRL 1 →	03 = 1/4 04 = 3/8	1 = 5 µm 2 = 20 µm	1 = 0÷2 bar (G1 -G2) 2 = 0÷4 bar (G1 - G2) 3 = 0÷8 bar (G1 - G2 - G3) 4 = 0÷12 bar (G1 - G2 - G3)	1 = Depressure drain 2 = Adapter for manometer 1/8 Gas (Manometer not included)	0 = Manometer incorporated 2 = Adapter for manometer 1/8 Gas (Manometer not included)
	FRL 2 →	04 = 3/8 05 = 1/2				
	FRL 3 →	07 = 3/4 09 = 1				

N030



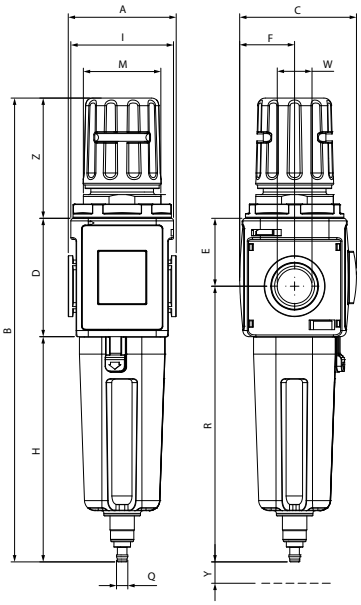

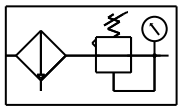

Dimensions (mm) - FRL 1

A	B	C	D	W	E	F	H	I	M	R	Q	Z	Y
51	233	57	57	1/4" - 3/8"	32.5	25.5	119	47.5	M37 x 1.5	144	E.D.256 (6.5)	57	7

Dimensions (mm) - FRL 2

A	B	C	D	W	E	F	H	I	M	R	Q	Z	Y
62	270	67	68	3/8" - 1/2"	39	31.5	129.5	59	M47 x 1.5	158.5	E.D.256 (6.5)	72.5	9.5

Dimensions (mm) - FRL 3

A	B	C	D	W	E	F	H	I	M	R	Q	Z	Y
90	329	96	89	3/4" - 1	47	46	161	77.5	M59 x 1.5	203	E.D.256 (6.5)	79	70

DEP = Vacuum-operated A = Automatic

Code	Size	Thread (NPTF)	Filtartion	Regulation	Flow Rate	Exhaust
N030 103 231 000	FR 1	1/4"	20 µm	0 ÷ 116 psi (8 bar)	2000 Nl/min *(70.6 cfm)*	DEP
N030 104 231 000	FR 1	3/8"	20 µm	0 ÷ 116 psi (8 bar)	2000 Nl/min *(70.6 cfm)*	DEP
N030 104 232 000	FR 1	3/8"	20 µm	0 ÷ 116 psi (8 bar)	2000 Nl/min *(70.6 cfm)*	A
N030 204 231 000	FR 2	3/8"	20 µm	0 ÷ 116 psi (8 bar)	3000 Nl/min *(105.9 cfm)*	DEP
N030 205 231 000	FR 2	1/2"	20 µm	0 ÷ 116 psi (8 bar)	3000 Nl/min *(105.9 cfm)*	DEP
N030 205 232 000	FR 2	1/2"	20 µm	0 ÷ 116 psi (8 bar)	3000 Nl/min *(105.9 cfm)*	A
N030 307 231 000	FR 3	3/4"	20 µm	0 ÷ 116 psi (8 bar)	5800 Nl/min *(204.8 cfm)*	DEP
N030 309 231 000	FR 3	1"	20 µm	0 ÷ 116 psi (8 bar)	5800 Nl/min *(204.8 cfm)*	DEP
N030 309 232 000	FR 3	1"	20 µm	0 ÷ 116 psi (8 bar)	5800 Nl/min *(204.8 cfm)*	A

Regulating the Air Pressure

Follow the instructions below to set the air pressure:

1 Raise the knob to the regulating position.

2 Rotate to set the desired pressure, always in ascending order.

3 Press the knob down to lock into position.
The knob can be padlocked to prevent tampering.



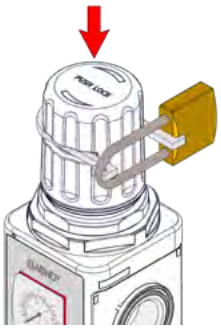

N040 LUBRICATOR

TECHNICAL CHARACTERISTICS

Reference standard

1907/2006 REACH ✓ | 2011/65/CE RoHS ✓ | PED 2014/68/UE | II 2GD Ex h TX

	FRL 1	FRL 2	FRL 3
METALLIC THREAD	1/4" NPTF 3/8" NPTF	3/8" NPTF 1/2" NPTF	3/4" NPTF 1" NPTF
TORQUE SPECIFICATIONS	Max 15 Nm	Max 20 Nm	Max 50 Nm
6 bar FLOW RATE with Δp 1 bar	3400 Nl/min *(120 cfm)*	6100 Nl/min *(215.4 cfm)*	11700 Nl/min *(413.1 cfm)*
MOUNTING SCREWS	M5 x 15	M5 x 15	M6 x 15
BOWL CAPACITY	28 cm³	37 cm³	151 cm³
FLUID		Compressed Air	
MAX PRESSURE	217 psi (15 bar)	217 psi (15 bar)	188 psi (13 bar)
TEMPERATURE		14 °F (-10 °C) 122 °F (50 °C)	
MOUNTING POSITION		Vertical	
RECOMMENDED OILS		CLASS ISO 22 ISO 3448 NORMA	

Part Numbering System

Code	Size	Thread	-	Oil loading system
N 0 4 0	1	0 3	0 0 0	0 0 0

FRL 1 → 03 = 1/4, 04 = 3/8

FRL 2 → 04 = 3/8, 05 = 1/2

FRL 3 → 07 = 3/4, 09 = 1

1 = Manual
2 = Automatic vacuum-operated

N040



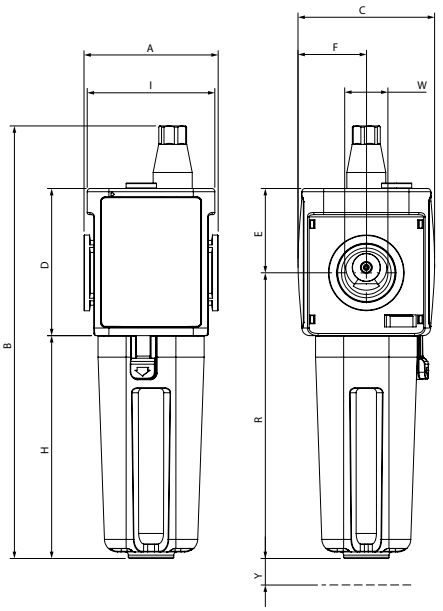

Dimensions (mm) - FRL 1

A	B	C	D	W	E	F	H	I	R	Y
51	178.5	51	57	1/4" - 3/8"	32.5	25.5	92.5	47.5	117.5	7

Dimensions (mm) - FRL 2

A	B	C	D	W	E	F	H	I	R	Y
62	200	63	68	3/8" - 1/2"	39	31.5	103	59	132	9.5

Dimensions (mm) - FRL 3

A	B	C	D	W	E	F	H	I	R	Y
90	254	92	89	3/4" - 1"	47	46	136	77.5	178	19

DEP = Manual **A = Automatic vacuum-operated**

Code	Size	Thread (NPTF)	Flow Rate	Oil loading System
N040 103 000 100	LUB 1	1/4"	3400 Nl/min *(120 cfm)*	M
N040 104 000 100	LUB 1	3/8"	3400 Nl/min *(120 cfm)*	M
N040 104 000 200	LUB 1	3/8"	3400 Nl/min *(120 cfm)*	A
N040 204 000 100	LUB 2	3/8"	6100 Nl/min *(215.4 cfm)*	M
N040 205 000 100	LUB 2	1/2"	6100 Nl/min *(215.4 cfm)*	M
N040 205 000 200	LUB 2	1/2"	6100 Nl/min *(215.4 cfm)*	A
N040 307 000 100	LUB 3	3/4"	11700 Nl/min *(413.1 cfm)*	M
N040 309 000 100	LUB 3	1"	11700 Nl/min *(413.1 cfm)*	M
N040 309 000 200	LUB 3	1"	11700 Nl/min *(413.1 cfm)*	A

Lubricators

M

The oil is added to the lubricator unit by unscrewing the cap on the top or by removing the bowl. Make sure that there is no pressure running inside the unit.
You can adjust the oil flow by using a screwdriver. We recommend adding one drop of oil every 300-600 Nl/min.



Lubricators

A

The vacuum-operated oil loading enables the bowl to be filled with oil automatically. The system is activated by a button on the top. The newly added oil, positioned at a lower height relatively to the lubricator unit, flows into the bowl thanks to a G1/8" attachment positioned on the bottom side of the unit. Stop adding oil once it reaches the maximum level, shown by the windows on the side of the bowl.

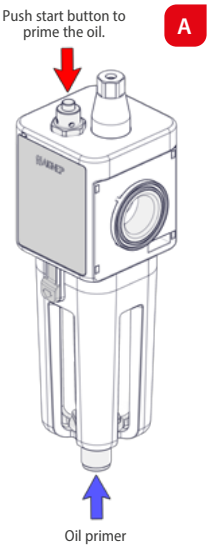

N050 - FRL 1 / FRL 2 MANUAL SHUT OFF VALVE

TECHNICAL CHARACTERISTICS

Reference standard

1907/2006 REACH
2011/65/CE RoHS
PED 2014/68/UE
II 2GD Ex h TX

	FRL 1	FRL 2
METALLIC THREAD	1/4" NPTF 3/8" NPTF	3/8" NPTF 1/2" NPTF
TORQUE SPECIFICATIONS	Max 15 Nm	Max 20 Nm
6 bar FLOW RATE with Δp 1 bar	2700 Nl/min *(95.3 cfm)*	3500 Nl/min *(123.6 cfm)*
MOUNTING SCREWS	M5 x 15	
FLUID	Compressed Air	
MAX PRESSURE	145 psi (10 bar)	
TEMPERATURE	14 °F (-10 °C) 122 °F (50 °C)	
MOUNTING POSITION	Vertical	

Part Numbering System

Code	Size	Thread	-	-
N 0 5 0	1	0 3	0 0 0	0 0 0

FRL 1 → 03 = 1/4, 04 = 3/8

FRL 2 → 04 = 3/8, 05 = 1/2

N050



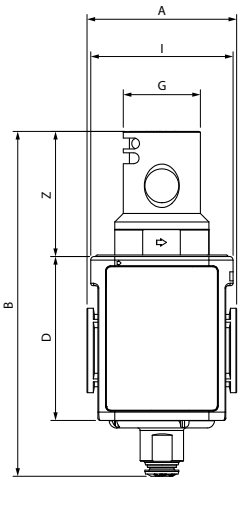

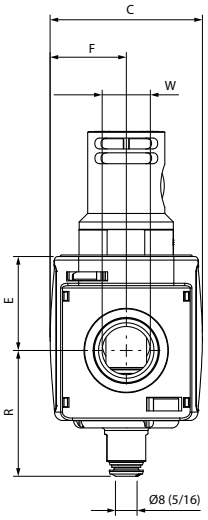

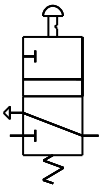

Dimensions (mm) - FRL 1

A	B	C	D	W	E	F	G	I	R	Z
51	134	51	57	1/4" - 3/8"	32.5	25.5	32	47.5	46	56

Dimensions (mm) - FRL 2

A	B	C	D	W	E	F	G	I	R	Z
62	143	63	68	3/8" - 1/2"	39	31.5	32	59	52	51

M = Manual

Code	Size	Thread (NPTF)	Flow Rate	Function	Drive
N050 103 000 000	V3V 1	1/4"	2700 Nl/min *(95.3 cfm)*	NC	M
N050 104 000 000	V3V 1	3/8"	2700 Nl/min *(95.3 cfm)*	NC	M
N050 204 000 000	V3V 2	3/8"	3500 Nl/min *(123.6 cfm)*	NC	M
N050 205 000 000	V3V 2	1/2"	3500 Nl/min *(123.6 cfm)*	NC	M

Shut Off Valves

The shut off valve gets activated in the following phases:
1. By pressing the trigger switch 1, the primary circuit opens.

2. By pressing button 2, the primary circuit closes and the secondary circuit
drains.
This latter position can be padlocked.

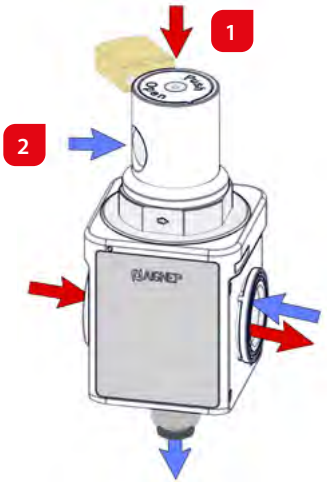

N050 - FRL 3 MANUAL SHUT OFF VALVE

TECHNICAL CHARACTERISTICS

Reference standard

1907/2006 REACH
2011/65/CE RoHS
PED 2014/68/UE
II 2GD Ex h TX

	FRL 3
METALLIC THREAD	3/4" NPTF 1" NPTF
TORQUE SPECIFICATIONS	Max 50 Nm
6 bar FLOW RATE with Δp 1 bar	6700 Nl/min *(236.6 cfm)*
MOUNTING SCREWS	M6 x 15
FLUID	Compressed Air
MAX PRESSURE	43 - 145 psi (3 - 10 bar)
TEMPERATURE	14 °F (-10 °C) 122 °F (50 °C)
MOUNTING POSITION	Vertical

Part Numbering System

Code	Size	Thread	-	-
N 0 5 0	3	0 7	0 0 0	0 0 0
	FRL 3	07 = 3/4 09 = 1		

N050



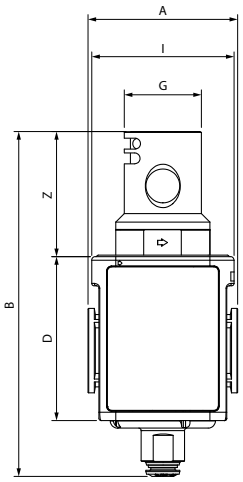

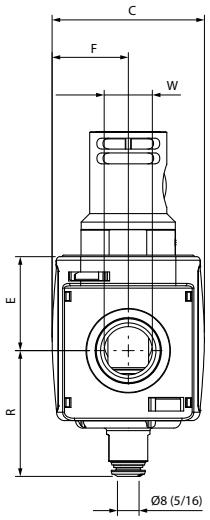

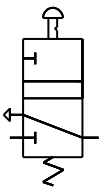

Dimensions (mm) - FRL 3

A	B	C	D	W	E	F	G	I	R	Z
90	199	92	89	3/4" - 1"	47	46	32	77.5	67	85

M = Manual

Code	Size	Thread (NPTF)	Flow Rate	Function	Drive
N050 307 000 000	V3V 3	3/4"	6700 Nl/min *(236.6 cfm)*	NC	M/S
N050 309 000 000	V3V 3	1	6700 Nl/min *(236.6 cfm)*	NC	M/S

Shut Off Valves

The shut off valve gets activated in the following phases:
1. By pressing the trigger switch 1, the primary circuit opens.

2. By pressing button 2, the primary circuit closes and the secondary circuit drains.
This latter position can be padlocked.

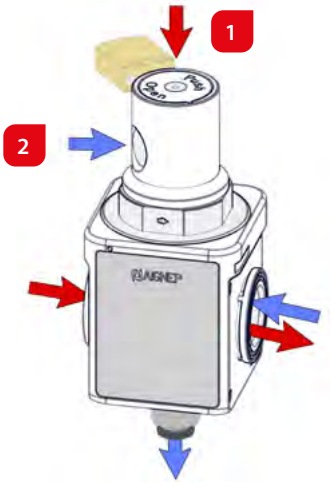

N051 PNEUMATIC SHUT OFF VALVE

TECHNICAL CHARACTERISTICS

Reference standard

1907/2006 REACH
2011/65/CE RoHS
PED 2014/68/UE
II 2GD Ex h TX

	FRL 1	FRL 2	FRL 3
METALLIC THREAD	1/4" NPTF 3/8" NPTF	3/8" NPTF 1/2" NPTF	3/4" NPTF 1" NPTF
TORQUE SPECIFICATIONS	Max 15 Nm	Max 20 Nm	Max 50 Nm
6 bar FLOW RATE with Δp 1 bar	2700 Nl/min *(95.3 cfm)*	3500 Nl/min *(123.6 cfm)*	6700 Nl/min *(236.6 cfm)*
MOUNTING SCREWS	M5 x 15	M5 x 15	M6 x 15
FLUID		Compressed Air	
MAX PRESSURE	145 psi (10 bar)	145 psi (10 bar)	188 psi (13 bar)
MINIMUM DRIVING PRESSURE	36 psi (2.5 bar)	36 psi (2.5 bar)	-
TEMPERATURE		14 °F (-10 °C) 122 °F (50 °C)	
MOUNTING POSITION		Vertical	

FRL 3	
INLET PRESSURE *psi (bar)*	MINIMUM DRIVING PRESSURE *psi (bar)*
29 (2)	*29 (2)*
58 *(4)*	*50 (3.5)*
87 *(6)*	*68 (4.7)*
116 *(8)*	*84 (5.8)*
145 *(10)*	*101 (7)*

Part Numbering System

Code	Size	Thread	-	-
N 0 5 1	1	0 3	0 0 0	0 0 0

FRL 1 → 03 = 1/4, 04 = 3/8
FRL 2 → 04 = 3/8, 05 = 1/2
FRL 3 → 07 = 3/4, 09 = 1

N051



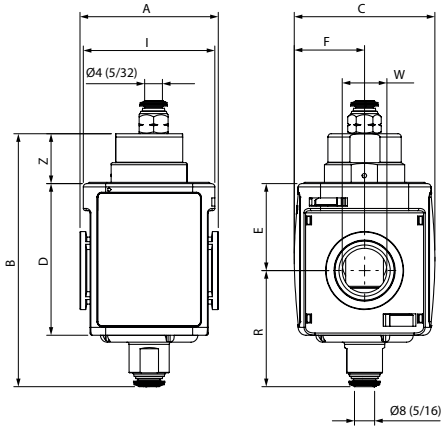

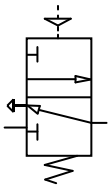

Dimensions (mm) - FRL 1

A	B	C	D	W	E	F	I	R	Z
51	98	51	57	1/4" - 3/8"	32.5	25.5	47.5	46	19.5

Dimensions (mm) - FRL 2

A	B	C	D	W	E	F	I	R	Z
62	113.5	63	68	3/8" - 1/2"	39	31.5	59	52	22

Dimensions (mm) - FRL 3

A	B	C	D	W	E	F	I	R	Z
90	141	92	89	3/4" - 1"	47	46	77.5	67	26.5

P = Pneumatic

Code	Size	Thread (NPTF)	Flow Rate	Function	Drive
N051 104 000 000	V3V 1	3/8"	2700 Nl/min *(95.3 cfm)*	NC	P
N051 205 000 000	V3V 2	1/2"	3500 Nl/min *(123.6 cfm)*	NC	P
N051 309 000 000	V3V 3	1"	6700 Nl/min *(236.6 cfm)*	NC	P

Shut Off Valves

The pneumatic shut off valve gets activated in the following phases:

1. By pressurizing the pilot "P", the primary circuit opens.

2. By removing pressure from the operator "P", the primary circuit closes and the secondary circuit drains.

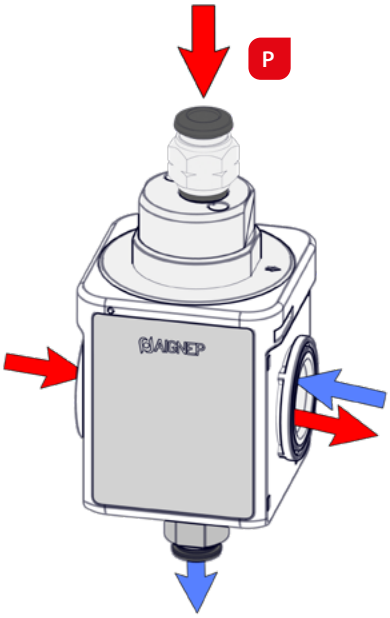

N052 MANUAL/ELECTRO-PNEUMATIC SHUT OFF VALVE

TECHNICAL CHARACTERISTICS

Reference standard

1907/2006 REACH ✓ | 2011/65/CE RoHS ✓ | PED 2014/68/UE | II 2GD Ex h TX

	FRL 1	FRL 2	FRL 3
METALLIC THREAD	1/4" NPTF 3/8" NPTF	3/8" NPTF 1/2" NPTF	3/4" NPTF 1" NPTF
TORQUE SPECIFICATIONS	Max 15 Nm	Max 20 Nm	Max 50 Nm
6 bar FLOW RATE with Δp 1 bar	2700 Nl/min *(95.3 cfm)*	3500 Nl/min *(123.6 cfm)*	6700 Nl/min *(236.6 cfm)*
MOUNTING SCREWS	M5 x 15	M5 x 15	M6 x 15
FLUID	Compressed Air		
OPERATING PRESSURE	from 36 psi (2.5 bar) to 145 psi (10 bar)		
TEMPERATURE	14 °F (-10 °C) 122 °F (50 °C)		
MOUNTING POSITION	Vertical		
SOLENOID	See Chapter 18		

Part Numbering System

Code	Size	Thread	-	-
N 0 5 2	1	0 3	0 0 0	0 0 0

FRL 1 → 03 = 1/4, 04 = 3/8

FRL 2 → 04 = 3/8, 05 = 1/2

FRL 3 → 07 = 3/4, 09 = 1

N052



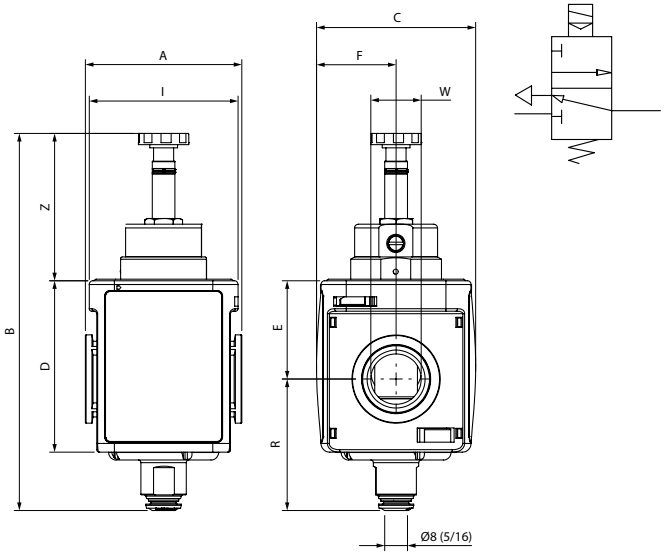

Dimensions (mm) - FRL 1

A	B	C	D	W	E	F	I	R	Z
51	98	51	57	1/4" - 3/8"	32.5	25.5	47.5	46	55

Dimensions (mm) - FRL 2

A	B	C	D	W	E	F	I	R	Z
62	113.5	63	68	3/8" - 1/2"	39	31.5	59	52	58

Dimensions (mm) - FRL 3

A	B	C	D	W	E	F	I	R	Z
90	169	92	89	3/4" - 1"	47	46	77.5	67	55

*NB: *Standard without solenoid* EP = *Electro-pneumatic*

Code	Size	Thread (NPTF)	Flow Rate	Function	Drive
N052 104 000 000	V3V 1	3/8"	2700 Nl/min *(95.3 cfm)*	NC	EP
N052 205 000 000	V3V 2	1/2"	3500 Nl/min *(123.6 cfm)*	NC	EP
N052 309 000 000	V3V 3	1"	6700 Nl/min *(236.6 cfm)*	NC	EP

NB: *ATEX II 2GD Ex h TX category can be reclassified in accordance to the kind of solenoid applied.*

Shut Off Valves

The electro-pneumatic shut off valve gets activated in the following phases:

1. By activating the electric impulse, the primary circuit opens.

2. By removing the electric impulse, the primary circuit closes and the secondary circuit drains.

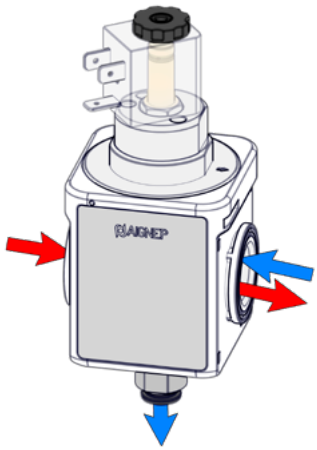

N060 SOFT START VALVE

TECHNICAL CHARACTERISTICS

Reference standard

1907/2006 REACH ✓ | 2011/65/CE RoHS ✓ | PED 2014/68/UE | II 2GD Ex h TX

	FRL 1	FRL 2	FRL 3
METALLIC THREAD	1/4" NPTF 3/8" NPTF	3/8" NPTF 1/2" NPTF	3/4" NPTF 1" NPTF
TORQUE SPECIFICATIONS	Max 15 Nm	Max 20 Nm	Max 50 Nm
6 bar FLOW RATE with Δp 1 bar	2700 Nl/min *(95.3 cfm)*	3500 Nl/min *(123.6 cfm)*	6700 Nl/min *(236.6 cfm)*
MOUNTING SCREWS	M5 x 15	M5 x 15	M6 x 15
MAXIMUM INLET PRESSURE	145 psi (10 bar)		
FLUID	Compressed Air		
TEMPERATURE	14 °F (-10 °C) 122 °F (50 °C)		
ASSEMBLY POSITION	Vertical		
MOUNTING POSITION	End of all FRL components		

Part Numbering System

Code	Size	Thread	-	-
N 0 6 0	1	0 3	0 0 0	0 0 0

FRL 1 → 03 = 1/4, 04 = 3/8

FRL 2 → 04 = 3/8, 05 = 1/2

FRL 3 → 07 = 3/4, 09 = 1

N060

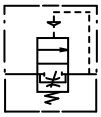



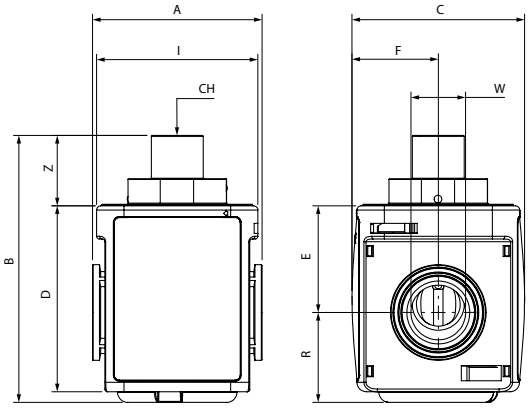

Dimensions (mm) - FRL 1

A	B	C	D	W	E	F	I	R	Z	CH
51	84.5	51	57	1/4" - 3/8"	32.5	25.5	47.5	28	23.5	5

Dimensions (mm) - FRL 2

A	B	C	D	W	E	F	I	R	Z	CH
62	97.5	63	68	3/8" - 1/2"	39	31.5	59	33	25	5

Dimensions (mm) - FRL 3

A	B	C	D	W	E	F	I	R	Z	CH
90	84.5	92	89	3/4" - 1"	47	46	77.5	67	24	5

Code	Size	Thread (NPTF)	Flow Rate
N060 103 000 000	APE 1	1/4"	2700 Nl/min *(95.3 cfm)*
N060 104 000 000	APE 1	3/8"	2700 Nl/min *(95.3 cfm)*
N060 204 000 000	APE 2	3/8"	3500 Nl/min *(123.6 cfm)*
N060 205 000 000	APE 2	1/2"	3500 Nl/min *(123.6 cfm)*
N060 307 000 000	APE 3	3/4"	6700 Nl/min *(236.6 cfm)*
N060 309 000 000	APE 3	1"	6700 Nl/min *(236.6 cfm)*

Soft Start Valve

Our soft start valve is a pneumatic device that allows a pneumatic circuit to be pressurized gradually. With the adjustment screw shown in the drawing to the right, you can progressively increase or decrease the air flow introduced to your pneumatic circuit. This valve is designed to completely open the air flow of your circuit at 50% of the inlet pressure.

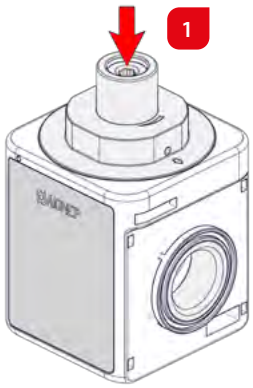

N090 AIR DISTRIBUTOR

TECHNICAL CHARACTERISTICS

Reference standard

1907/2006 REACH
2011/65/CE RoHS
PED 2014/68/UE
II 2GD Ex h TX

	FRL 1	FRL 2	FRL 3
METALLIC THREAD	1/4" NPTF 3/8" NPTF	3/8" NPTF 1/2" NPTF	3/4" NPTF 1" NPTF
TORQUE SPECIFICATIONS	Max 15 Nm	Max 20 Nm	Max 50 Nm
6 bar FLOW RATE with Δp 1 bar	3400 Nl/min *(120 cfm)*	6100 Nl/min *(215.4 cfm)*	11700 Nl/min *(413.1 cfm)*
MOUNTING SCREWS	M5 x 15	M5 x 15	M6 x 15
FLUID		Compressed Air	
MAX PRESSURE	217 psi (15 bar)	217 psi (15 bar)	188 psi (13 bar)
TEMPERATURE		14 °F (-10 °C) 122 °F (50 °C)	
MOUNTING POSITION		Vertical	

Part Numbering System

Code	Size	Thread X	Thread Y	-			
N 0 9 0	1	0 3	0 3	0	0	0	0

	Thread X	Thread Y
FRL 1	03 = 1/4 04 = 3/8	03 = 1/4 04 = 3/8
FRL 2	04 = 3/8 05 = 1/2	03 = 1/4 04 = 3/8 05 = 1/2
FRL 3	07 = 3/4 09 = 1	07 = 3/4 09 = 1

N090



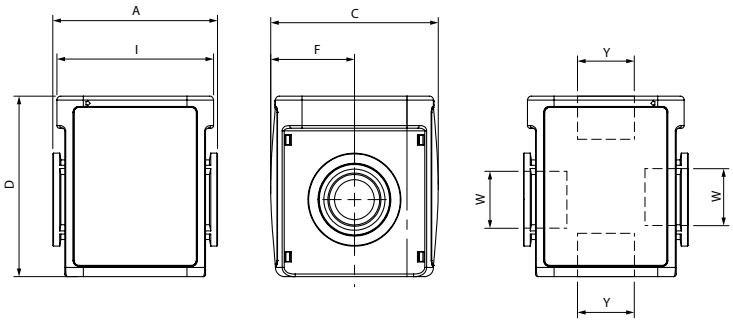

Dimensions (mm) - FRL 1

A	C	D	W	F	I	Y
51	51	57	1/4" - 3/8"	25.5	47.5	1/4" - 3/8"

Dimensions (mm) - FRL 2

A	C	D	W	F	I	Y
62	63	68	3/8" - 1/2"	31.5	59	1/4" - 3/8" - 1/2"

Dimensions (mm) - FRL 3

A	C	D	W	F	I	Y
90	92	89	3/4" - 1"	46	77.5	3/4" - 1

Code	Size	Thread (NPTF)	Flow Rate
N090 103 030 000	DIS 1	1/4" - 1/4"	3400 Nl/min *(120 cfm)*
N090 104 030 000	DIS 1	3/8" - 1/4"	3400 Nl/min *(120 cfm)*
N090 104 040 000	DIS 1	3/8" - 3/8"	3400 Nl/min *(120 cfm)*
N090 204 030 000	DIS 2	3/8" - 1/4"	6100 Nl/min *(215.4 cfm)*
N090 204 040 000	DIS 2	3/8" - 3/8"	6100 Nl/min *(215.4 cfm)*
N090 205 030 000	DIS 2	1/2" - 1/4"	6100 Nl/min *(215.4 cfm)*
N090 205 050 000	DIS 2	1/2" -1/2"	6100 Nl/min *(215.4 cfm)*
N090 307 070 000	DIS 3	3/4" - 3/4"	11700 Nl/min *(413.1 cfm)*
N090 309 090 000	DIS 3	1" - 1"	11700 Nl/min *(413.1 cfm)*

Air Distributor

The air distributor allows you to branch off your air flow to several components such as pressure switches and other units. The air distributor can be placed anywhere in your air treatment unit.

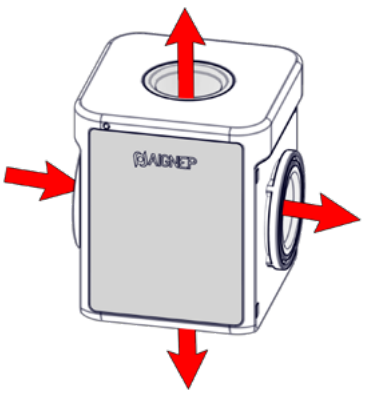



N100 FR + L

TECHNICAL CHARACTERISTICS

Reference standard

1907/2006 REACH ✓ | 2011/65/CE RoHS ✓ | PED 2014/68/UE | II 2GD Ex h TX

	FRL 1	FRL 2	FRL 3
METALLIC THREAD	1/4" NPTF 3/8" NPTF	3/8" NPTF 1/2" NPTF	3/4" NPTF 1" NPTF
TORQUE SPECIFICATIONS	Max 15 Nm	Max 20 Nm	Max 50 Nm
6 bar FLOW RATE with Δp 1 bar	1500 Nl/min *(52.9 cfm)*	2700 Nl/min *(95.3 cfm)*	5200 Nl/min *(183.6 cfm)*
MOUNTING SCREWS	M5 x 15	M5 x 15	M6 x 15
BOWL CAPACITY	28 cm³	37 cm³	151 cm³
FILTRATION GRADE	5 µm 20 µm STANDARD		
REGULATION RANGE	0 ÷ 29 psi (2 bar) 0 ÷ 58 psi (4 bar) 0 ÷ 116 psi STANDARD (8 bar) 0 ÷ 174 psi (12 bar)	(FRL 1 - 2) (FRL 1 - 2) (FRL 1 - 2 - 3) (FRL 1 - 2 - 3)	
FLUID	Compressed Air		
MAX PRESSURE	217 psi (15 bar)	217 psi (15 bar)	188 psi (13 bar)
TEMPERATURE	14 °F (-10 °C) 122 °F (50 °C)		
MOUNTING POSITION	Vertical		

Part Numbering System

Code	Size	Thread	Filtration	Regulation	Exhaust	Oil loading System		Manometer System
N100	1	03	1	1	1	1	0	0
	FRL 1 →	03 = 1/4 04 = 3/8	1 = 5 µm 2 = 20 µm	1 = 0÷2 bar (G1 -G2) 2 = 0÷4 bar (G1 - G2) 3 = 0÷8 bar (G1 - G2 - G3) 4 = 0÷12 bar (G1 - G2 - G3)	1 = Depressure drain 2 = Automatic with float (max 8 bar)	1 = Manual 2 = Automatic vacuum-operated		0 = Manometer incorporated 2 = Adapter for manometer G1/8 (Manometer not included)
	FRL 2 →	04 = 3/8 05 = 1/2						
	FRL 3 →	07 = 3/4 09 = 1						

N100



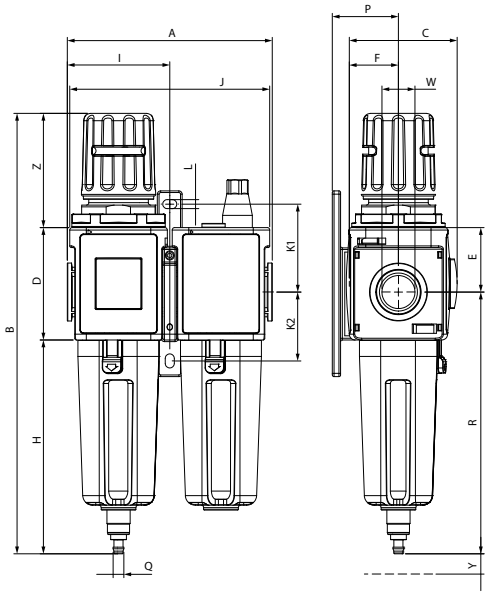

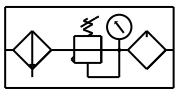

Dimensions (mm) - FRL 1

A	B	C	D	E	F	H	I	J	K1	K2	L	P	Q	R	W	Y	Z
102	233	57	57	32.5	25.5	119	47.5	98.5	45	35.5	5.5	34.5	E.D.256 (6.5)	144	1/4"-3/8"	7	57

Dimensions (mm) - FRL 2

A	B	C	D	E	F	H	I	J	K1	K2	L	P	Q	R	W	Y	Z
124	270	67	68	39	31.5	129.5	59	121	53	41.5	5.5	40	E.D.256 (6.5)	158.5	3/8"-1/2"	9.5	72.5

Dimensions (mm) - FRL 3

A	B	C	D	E	F	H	I	J	K1	K2	L	P	Q	R	W	Y	Z
180	329	96	89	47	46	161	77.5	167.5	66	55	6.5	58	E.D.256 (6.5)	203	3/4"-1"	70	79

DEP = Vacuum-operated **A = Automatic** **M = Manual**

Code	Size	Thread (NPTF)	Filtartion	Regulation	Flow Rate	Exhaust
N100 103 231 100	FR+L1	1/4"	20 µm	0 ÷ 116 psi (8 bar)	1500 Nl/min *(52.9 cfm)*	DEP
N100 104 231 100	FR+L1	3/8"	20 µm	0 ÷ 116 psi (8 bar)	1500 Nl/min *(52.9 cfm)*	DEP
N100 104 232 100	FR+L1	3/8"	20 µm	0 ÷ 116 psi (8 bar)	1500 Nl/min *(52.9 cfm)*	A
N100 204 231 100	FR+L2	3/8"	20 µm	0 ÷ 116 psi (8 bar)	2700 Nl/min *(95.3 cfm)*	DEP
N100 205 231 100	FR+L2	1/2"	20 µm	0 ÷ 116 psi (8 bar)	2700 Nl/min *(95.3 cfm)*	DEP
N100 205 232 100	FR+L2	1/2"	20 µm	0 ÷ 116 psi (8 bar)	2700 Nl/min *(95.3 cfm)*	A
N100 307 231 100	FR+L3	3/4"	20 µm	0 ÷ 116 psi (8 bar)	5200 Nl/min *(183.6 cfm)*	DEP + M
N100 309 231 100	FR+L3	1"	20 µm	0 ÷ 116 psi (8 bar)	5200 Nl/min *(183.6 cfm)*	DEP
N100 309 232 100	FR+L3	1"	20 µm	0 ÷ 116 psi (8 bar)	5200 Nl/min *(183.6 cfm)*	A

Regulating the Air Pressure

Follow the instructions below to set the air pressure:

1 Raise the knob to the regulating position.

2 Rotate to set the desired pressure, always in ascending order.

3 Press the knob down to lock into position.
The knob can be padlocked to prevent tampering.



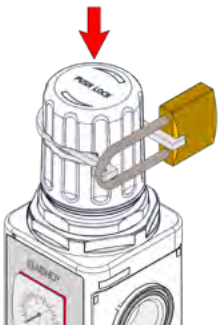

N400 FIL + FC

TECHNICAL CHARACTERISTICS

Reference standard

1907/2006 REACH ✓ | 2011/65/CE RoHS ✓ | PED 2014/68/UE | II 2GD Ex h TX

	FRL 1	FRL 2	FRL 3
METALLIC THREAD	1/4" NPTF 3/8" NPTF	3/8" NPTF 1/2" NPTF	3/4" NPTF 1" NPTF
TORQUE SPECIFICATIONS	Max 15 Nm	Max 20 Nm	Max 50 Nm
6 bar FLOW RATE with Δp 1 bar	600 Nl/min *(21.1 cfm)*	750 Nl/min *(26.4 cfm)*	1400 Nl/min *(49.4 cfm)*
MOUNTING SCREWS	M5 x 15	M5 x 15	M6 x 15
BOWL CAPACITY	28 cm³	37 cm³	151 cm³
FILTRATION GRADE	5 µm + 0.01 µm		
FLUID	Compressed Air		
MAX PRESSURE	217 psi (15 bar)	217 psi (15 bar)	188 psi (13 bar)
TEMPERATURE	14 °F (-10 °C) 122 °F (50 °C)		
CONDENSATION EXHAUST	Vacuum-operated		
MOUNTING POSITION	Vertical		

Part Numbering System

Code	Size	Thread	Filtration		Condensate exhaust System	-		
N 4 0 0	1	0 3	4	0	1	0	0	0

FRL 1 → 03 = 1/4, 04 = 3/8

FRL 2 → 04 = 3/8, 05 = 1/2

FRL 3 → 07 = 3/4, 09 = 1

4 = 0.01 µm

1 = Vacuum-operated
2 = Automatic with float (max 8 bar)

N400



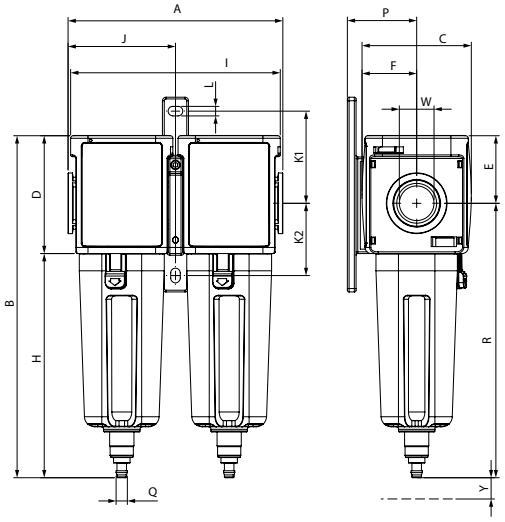

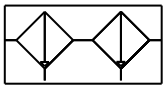

Dimensions (mm) - FRL 1

A	B	C	D	E	F	H	I	J	K1	K2	L	P	Q	R	W	Y
102	176	57	57	32.5	25.5	119	47.5	98.5	45	35.5	5.5	34.5	ED 256 (6.5)	144	1/4"-3/8"	7

Dimensions (mm) - FRL 2

A	B	C	D	E	F	H	I	J	K1	K2	L	P	Q	R	W	Y
124	197.5	67	68	39	31.5	129.5	59	121	53	41.5	5.5	40	ED 256 (6.5)	158.5	3/8"-1/2"	9.5

Dimensions (mm) - FRL 3

A	B	C	D	E	F	H	I	J	K1	K2	L	P	Q	R	W	Y
180	250	96	89	47	46	161	77.5	167.5	66	55	6.5	58	ED 256 (6.5)	203	3/4"-1"	70

Code	Size	Thread (NPTF)	Filtartion	Flow Rate
N400 103 401 000	FIL+FC 1	1/4"	5 µm + 0.01 µm	600 Nl/min *(21.1 cfm)*
N400 104 401 000	FIL+FC 1	3/8"	5 µm + 0.01 µm	600 Nl/min *(21.1 cfm)*
N400 204 401 000	FIL+FC 2	3/8"	5 µm + 0.01 µm	750 Nl/min *(26.4 cfm)*
N400 205 401 000	FIL+FC 2	1/2"	5 µm + 0.01 µm	750 Nl/min *(26.4 cfm)*
N400 307 401 000	FIL+FC 3	3/4"	5 µm + 0.01 µm	1400 Nl/min *(49.4 cfm)*
N400 309 401 000	FIL+FC 3	1"	5 µm + 0.01 µm	1400 Nl/min *(49.4 cfm)*

Coalescer Cartridge

The coalescer cartridge is made of a microfiber layer with an external stainless steel structure. The coalescer cartridge uses inertial impact, interception, and coalescence to form liquid particles into drops. These drops will fall into the bottom of the bowl. The coalescer filter is used as an oil separator which removes oil vapors from the air output. We recommend installing a 5 µm filter upstream to protect the coalescing filter from choking the cartridge.

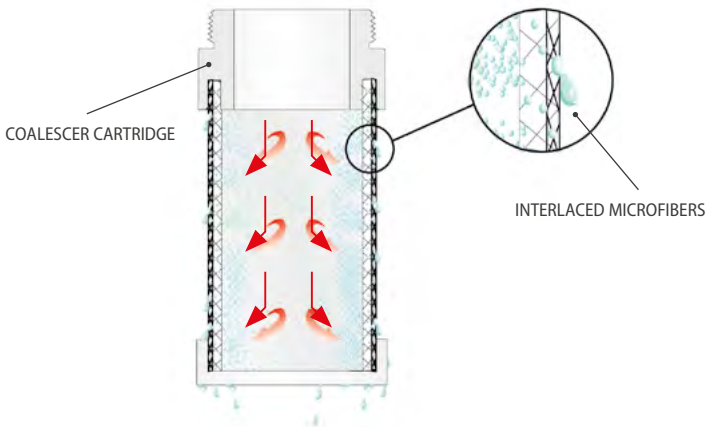

REG16

CLAMP BRACKET



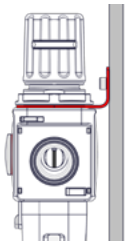

Code	
REG16 1Y 50 00 ZI	FRL 1
REG16 2Y 50 00 ZI	FRL 2
REG16 3Y 50 00 ZI	FRL 3

Y501

WALL MOUNT BRACKET



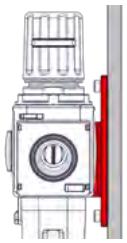

Code	
Y501 100 000 000	FRL 1
Y501 200 000 000	FRL 2
Y501 300 000 000	FRL 3

Y502

CONNECTION BRACKET



Code	
Y502 100 000 000	FRL 1
Y502 200 000 000	FRL 2
Y502 300 000 000	FRL 3

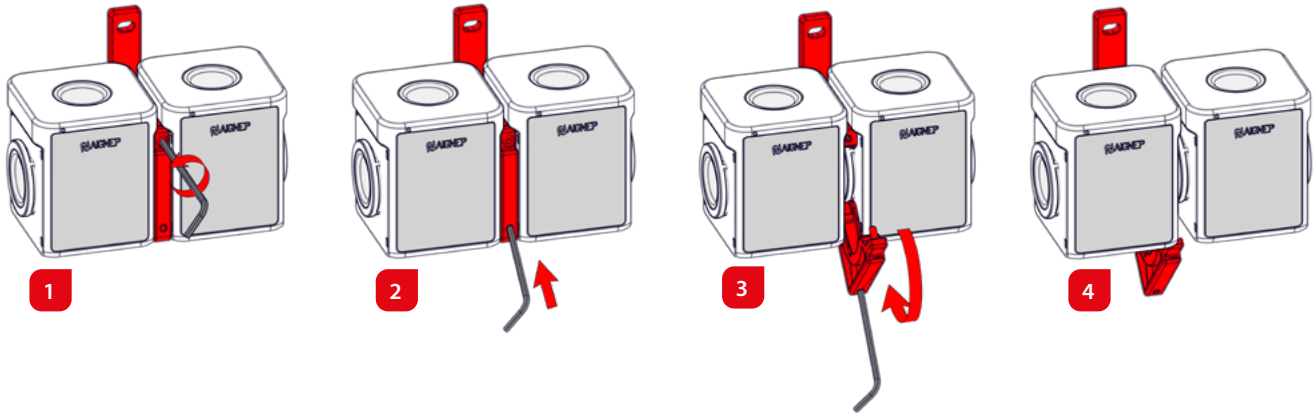

T545

COALESCER FILTER



Code	
T545 10Y 000 000	FRL 1
T545 20Y 000 000	FRL 2
T545 30Y 000 000	FRL 3

T546

ACTIVE CARBON FILTER



Code	
T546 10Y 000 000	FRL 1
T546 20Y 000 000	FRL 2
T546 30Y 000 000	FRL 3

It's recommended to replace the activated carbon filter (Cod. T546) every 6 months for (Cod. Y016).

FIL04

SINTERED FILTER



Code		
FIL04 1Y3 805 SC	FRL 1	5 µm
FIL04 1Y3 820 SC	FRL 1	20 µm
FIL04 2Y3 805 SC	FRL 2	5 µm
FIL04 2Y3 820 SC	FRL 2	20 µm
FIL04 3Y3 805 SC	FRL 3	5 µm
FIL04 3Y3 820 SC	FRL 3	20 µm

Y520

BOWL FOR FILTER UNIT



Code		
Y520 100 001 000	FRL 1	DEP
Y520 100 002 000	FRL 1	A
Y520 200 001 000	FRL 2	DEP
Y520 200 002 000	FRL 2	A
Y520 300 001 000	FRL 3	DEP
Y520 300 002 000	FRL 3	A

***DEP: Depressure drain** ***A: Automatic with float**

Y530

BOWL FOR LUBRICATOR UNIT



Code		
Y530 100 000 100	FRL 1	MAN
Y530 100 000 200	FRL 1	A
Y530 200 000 100	FRL 2	MAN
Y530 200 000 200	FRL 2	A
Y530 300 000 100	FRL 3	MAN
Y530 300 000 200	FRL 3	A

*MAN: Manual oil loading system

*A: Automatic oil loading system

MAS1

GAUGE



Code		Bar
MAS1 1N0 020 000	FRL 1	0 - 4
MAS1 1N0 040 000	FRL 1	0 - 12
MAS1 2N0 020 000	FRL 2	0 - 4
MAS1 2N0 040 000	FRL 2	0 - 12
MAS1 3N0 040 000	FRL 3	0 - 12

MAS0

GAUGE ADAPTER NPTF 1/8 NPTF

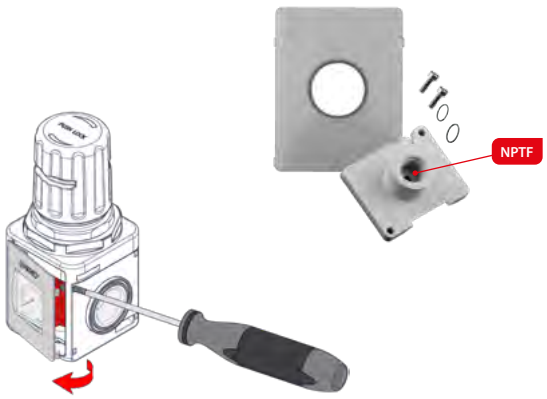

Code		NPTF
MAS0 112 000 000	FRL 1	1/8
MAS0 212 000 000	FRL 2	1/8
MAS0 312 000 000	FRL 3	1/8

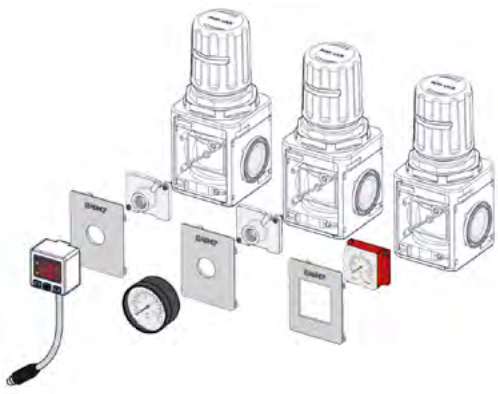

Gauge

Reference Standard

EN 837-1

IP31
EN 60 529

Media

- Compressed Air
- Inert gases
- Steam
- Non-highly viscose and non-crystallizing liquids

MAN09

GAUGE BACK CONNECTION

Code	bar	D	B1	B2	SW	G (NPTF)
MAN09 N2 040 000	0 ÷ 12	40	25	41.5	12	1/8
			min		max	
Temperature			- 20 °C		+ 60 °C	



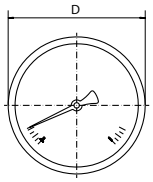

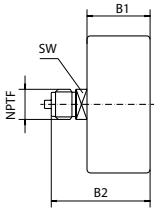

Y503

PADLOCK FOR ADJUSTER AND ADJUSTER FILTER KIT

Code	
Y503 100 000 000	FRL 1
Y503 200 000 000	FRL 2
Y503 300 000 000	FRL 3



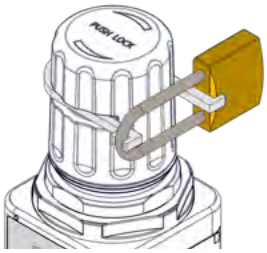

N504

SIDE HITCH ADAPTER KIT "UNIVERSAL SHORT"

Code		G
N504 100 000 000	FRL 1	1/4
N504 200 000 000	FRL 2	1/2

It's recommended to use the sealant on the thread.





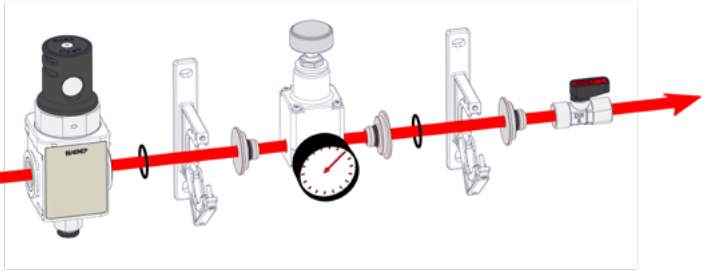

LUC01

PADLOCK

Code	
LUC01 00 001	20 mm

*** For Shut off valve manual/servo - V3V (Cod. N050)**



NOTES

SET YOUR FRL EVO

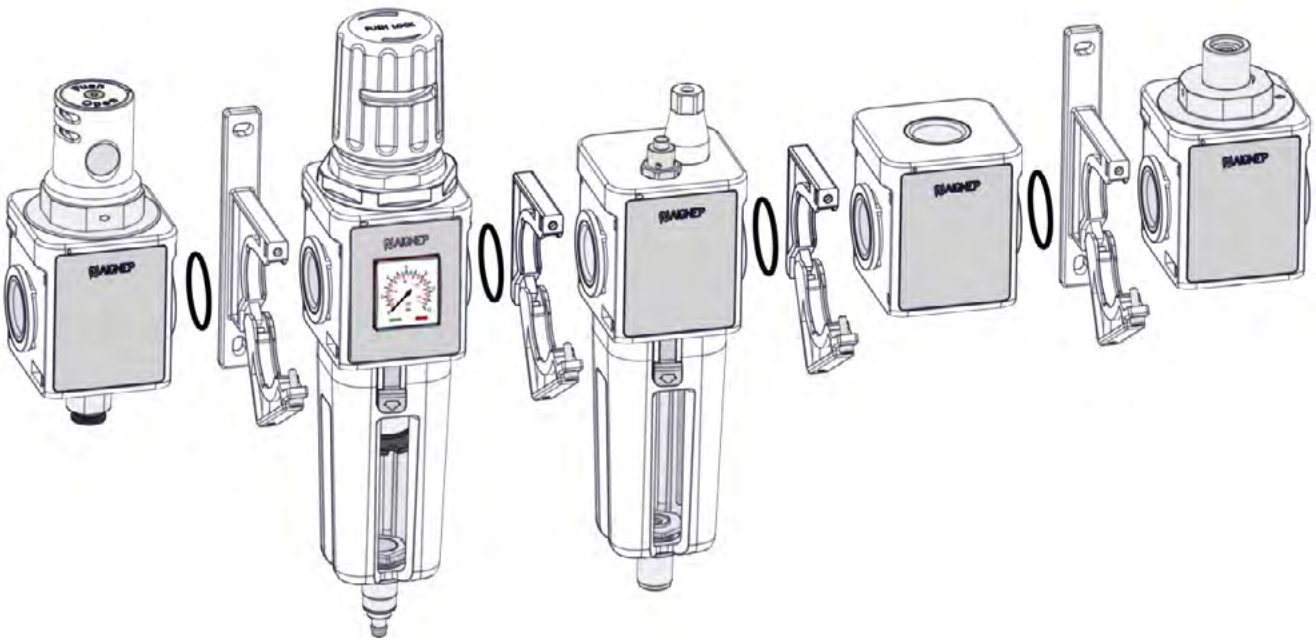

EXAMPLE:

	CODE ELEMENTS	 Y501	 Y502
1° POS	Y050 103 000 000		
+ →		☐	☒
2° POS	Y030 103 231 000		

Introduce the element code and accessory code into the table below to configure your FRL Evo

 Y501	 Y502
☐	☒
☒	☐
☐	☒

SET YOUR FRL EVO

	CODE ELEMENTS	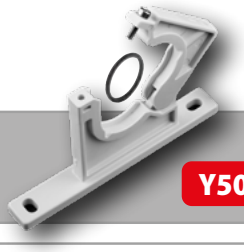 Y501	 Y502
1° POS	_ _ _ _ _ _ _ _ _ _ _ _		
	+ →	☐	☐
2° POS	_ _ _ _ _ _ _ _ _ _ _ _		
	+ →	☐	☐
3° POS	_ _ _ _ _ _ _ _ _ _ _ _		
	+ →	☐	☐
4° POS	_ _ _ _ _ _ _ _ _ _ _ _		
	+ →	☐	☐
5° POS	_ _ _ _ _ _ _ _ _ _ _ _		
	+ →	☐	☐
6° POS	_ _ _ _ _ _ _ _ _ _ _ _		
	+ →	☐	☐
7° POS	_ _ _ _ _ _ _ _ _ _ _ _		
	+ →	☐	☐
8° POS	_ _ _ _ _ _ _ _ _ _ _ _		
	+ →	☐	☐
9° POS	_ _ _ _ _ _ _ _ _ _ _ _		
	+ →	☐	☐
10° POS	_ _ _ _ _ _ _ _ _ _ _ _		


AIGNEP