Valves Series

Solenoid Valves



01V

Pg. 18.3

Inox Solenoid Valves



X1V

Pg. 18.42

Solenoid Valves



07V

Pg. 18.50

Namur Solenoid Valves



08V

Pg. 18.53

Miniature Electropilots U1



AA

Pg. 18.60

Universal Valves G1/8 - G1/4



CL - CM

Pg. 18.67

Rotary Hand Lever Valves



12V

Pg. 18.96

Micro Valves



AI JET

Pg. 18.99

Micro Valves



AI JET2

Pg. 18.104

16mm Valves - Mechanical and Manual Operators



CH

Pg. 18.107

Pedal Valves



AM

Pg. 18.110

FIELDBUS Valves Series

Fieldbus Electropneumatic Valves



16V

Pg. 18.114

Fieldbus Electropneumatic Valves



17V

Pg. 18.121

ISO Valves Series

Valves ISO 5599/1 - Sizes 1 - 2 - 3 - 4



BE

Pg. 18.156

COILS & CONNECTORS Series

Solenoids and Connectors



Coils & Connectors

Pg. 18.169

Click here to view the Valves Series on our Website

AIGNEP

MANUAL, PNEUMATIC, SOLENOID PILOT, FIELDBUS, AND ISO VALVES

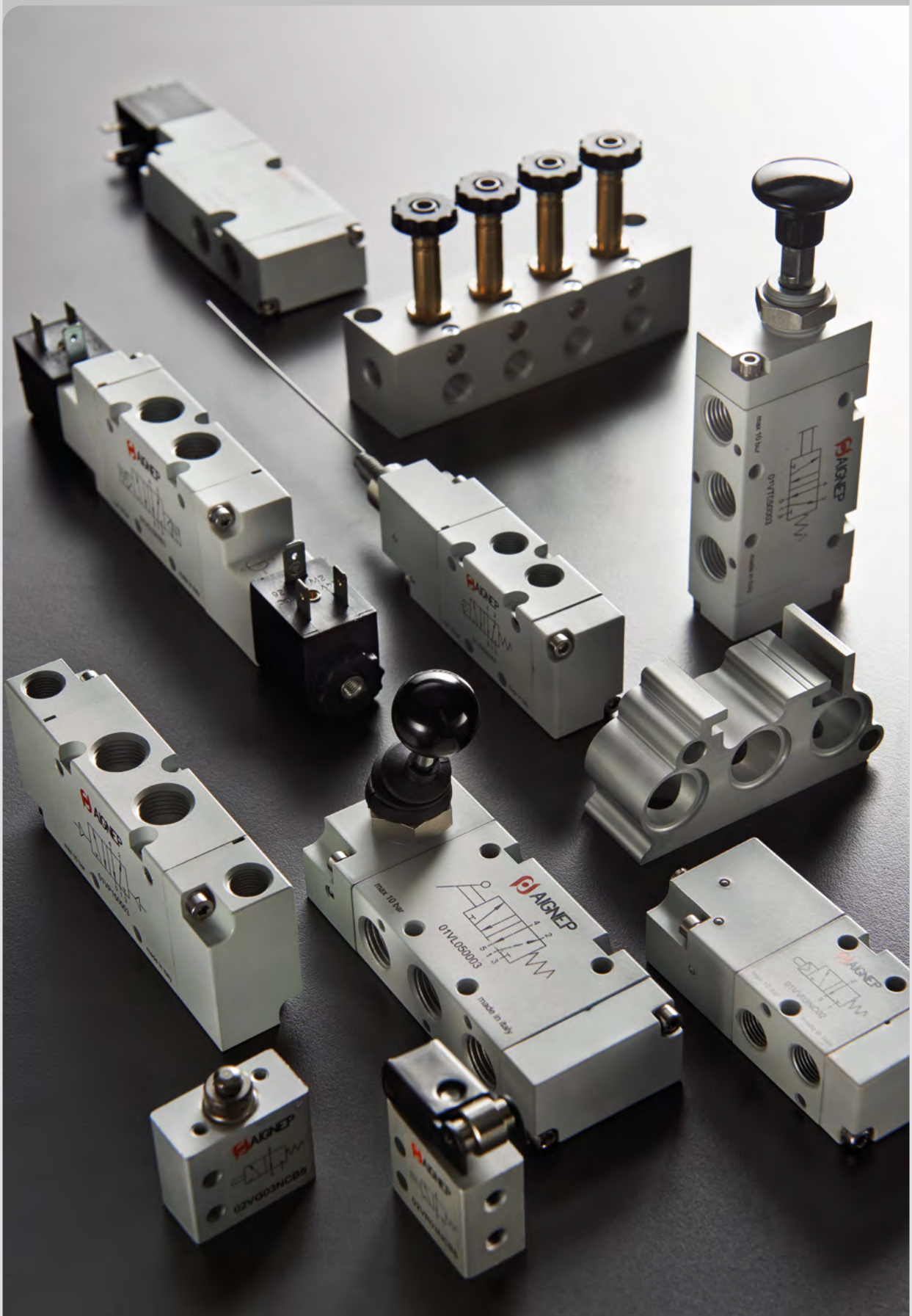

Valves Series

SERIES AA - MINIATURE ELECTROPILOTS

Miniature electropilots

- Direct intervention electropilots with poppet valve system and cushioned bottom seals
- Assembly on sub-base, threaded connections on the body, CNOMO interface
- Orientable coil (360°) separated from mechanical part
- Versions: 2/2 3/2 NC - NO
- Original Univer SPEED modular sub-bases

Fluid	50 µm filtered air, with or without lubrication; neutral gases (upon request other fluids can be used)	
Ambient temperature	14 ÷ 122 °F (-10 ÷ 50 °C)	
Fluid temperature	Max 203 °F (50 °C)	
Commutation system	direct intervention poppet valve system with cushioned seals	
Ways/Positions	2/2 NC, 3/2 NC 3/2 NO Mechanism designed to keep the air inlet always through the body.	
Pressure	2/2NC - 3/2 NC = 0 ÷ 10 3/2 NO = 3 ÷ 10	
Control	eletric	
Return	mechanical spring	
Connections	on sub-base or with threaded connections on the body	
	sub-base	CNOMO
Nominal Ø (mm)	1,2 ÷ 1,5	1,2 ÷ 1,5
Nominal flow rate (Nl/min)	30 ÷ 60	33 ÷ 45
Coil	U1	U3
	UDA	UDC
Power consumption	3,5 W (DC) - 5 VA (AC)	2,5 W (DC) - 3,3 VA (AC)
Voltage	12 V DC - 24 V DC - 24 V AC - 110 V AC - 230 V AC	
Protection degree	IP65	

Reference standard

II 2G Ex h IIC T5 Gb

II 2D Ex h IIIC T100°C Db



Key

Screwdriver adjustment

Button on the ring nut

Pressure applied with a tool

MANUAL CONTROL STANDARD

2-POSITION SCREWDRIVER

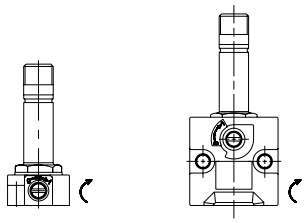

all NC servo drives where manual intervention is required

BUTTON ON THE BEZEL

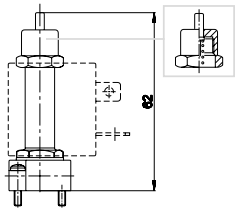

3/2 NO solenoid valves

MANUAL CONTROLS ON REQUEST

1–2-POSITION SCREWDRIVER

LETTER TO BE ADDED AT THE END OF THE ELECTROPILOT CODE

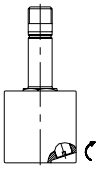

A

EXAMPLE::

UAB 0886 A

CNOMO NC electric actuators only

PRESSURE-OPERATED WITH TOOL

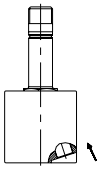

U

EXAMPLE:

UAB 0886 U

CNOMO NC electric actuators only

AA ELECTRIC ACTUATOR FOR MOUNTING ON AN SPEED BASE



Code	Way	Ø (d) inch (mm)	Flow rate (Nl/min) 1 → 2	2 → 3	Resp. Time (ms) En.	De-en	Manual override	Weight lb (kg)	
UAA 0184	3/2 NC	.059 (1.5)	60	80	12	12		0.06 (0.027)	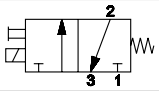
UAA 0186	2/2 NC	.051 (1.3)	50	-	16	-		0.06 (0.027)	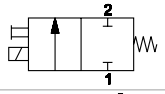
UAA 0188	3/2 NO	.047 (1.2)	30	70	11	10		0.07 (0.030)	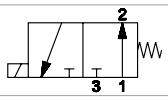

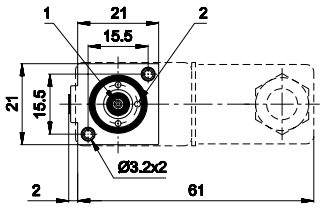

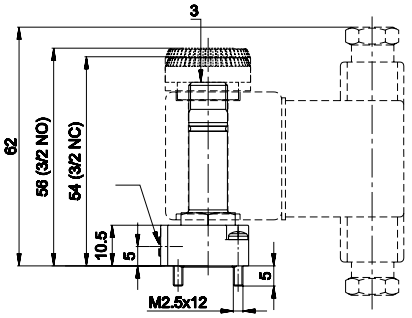

A Manual override

1 = Supply port

2 = Use

3 = Exhaust

Material:

valve body	Technopolymer
sleeve	Treated brass
core and spring	Stainless steel
seals	NBR

Use SPEED subbases to build Manifolds.

Available upon request: brass valve body (without manual override), zamak valve body, stainless steel sleeve, other inner diameters.

close the exhaust of the 3/2 NO electropilot to get the 2/2 NO one

AA ELECTRIC PILOT FOR FITTING TO A CROMO BASE



Code	Way	Ø (d) inch (mm)	Flow rate (Nl/min) 1 → 2	2 → 3	Resp. Time (ms) En.	De-en	Manual override	Weight lb (kg)	
UAA 0400	3/2 NC	.059 (1.5)	45	77	12	12		0.11 (0.052)	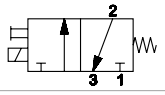
UAA 0400U	3/2 NC	.059 (1.5)	45	77	12	12		0.11 (0.052)	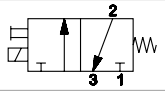
UAA 0402	2/2 NC	.051 (1.3)	42	-	18	-		0.11 (0.052)	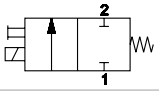
UAA 0404	3/2 NO	.047 (1.2)	33	77	11	10		0.13 (0.060)	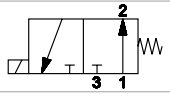

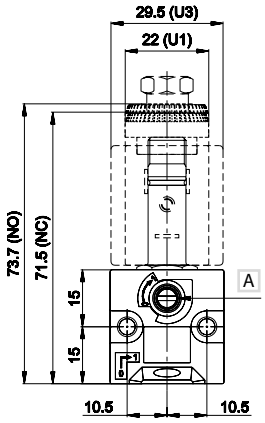

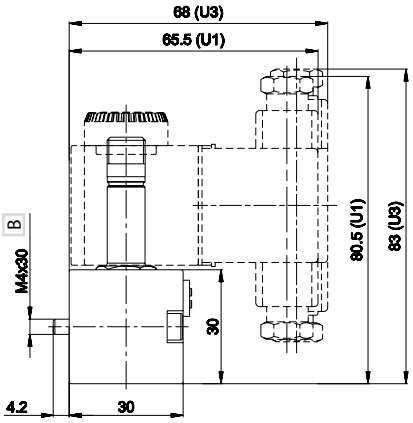

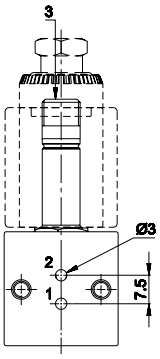

A Manual override

B ISO 4762

1 = Supply port

2 = Use

3 = Exhaust

Material:

valve body	Technopolymer
sleeve	Treated brass
core and spring	Stainless steel
seals	NBR

Available upon request: zamak valve body, stainless steel sleeve, other inner diameters.

close the exhaust of the 3/2 NO electropilot to get the 2/2 NO one

Electropilots are supplied without coil and connector

MODULAR SUB-BASE

	Code	Electropilot	Connections	Material	Weight lb (kg)
	UAA 0450	SPEED	G 1/8	zamak	0.08 (0.037)
	UAB 0900	CNOMO	G 1/8	zamak	0.17 (0.075)

MODULAR SUB-BASE SPEED G1/8

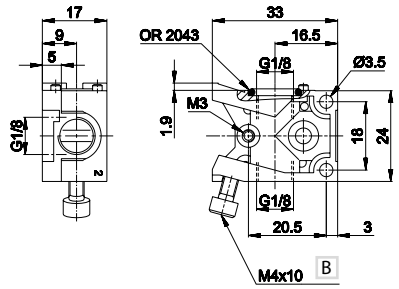

B ISO 4762

Advantages

The original "Speed" series was designed to solve some operational problems

- Possibility of defining the number of sub-bases at the moment of use
- Possibility of freely increasing or reducing the number of elements
- Quick assembly with special screw (built-in) standard supplied
- Reduction of stock holding
- Easy technical intervention

Air supply is rotated by 90° in comparison with side consumption

Standard (built-in) screw and O-ring

MODULAR SUB-BASE CNOMO G1/8

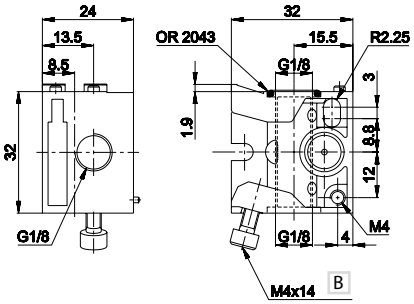

When assembling the manifold, put the bases on a flat surface and tighten the screw until the manifold is perfectly aligned.

SUB-BASE: EXAMPLE OF USE SPEED G1/8 WITH AA PILOT



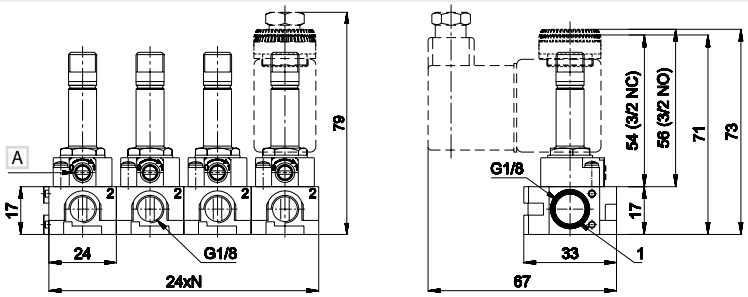

A Manual override

1 = Supply port

2 = Use

N = Number of valve positions

SUB-BASE: EXAMPLE OF USE CNOMO G1/8 WITH AA PILOT



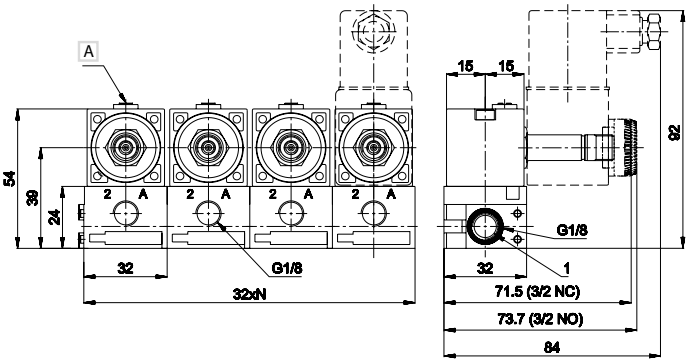

A Manual override

1 = Supply port

2 = Use

N = Number of valve positions

Electropilots are supplied without coil and connector

SLEEVES AA

	Code	Way	Ø Exhaust inch (mm)	Pressure psi (bar)	Weight lb (kg)
	UAA 0157	3/2 NC	.059 (1.5)	0 ÷ 145 (0 ÷ 10)	0.05 (0.022)
	UAA 0170	2/2 NC	-	0 ÷ 145 (0 ÷ 10)	0.05 (0.022)
	UAA 0150	3/2 NO	.047 (1.2)	44 ÷ 145 (3 ÷ 10)	0.05 (0.024)

NC

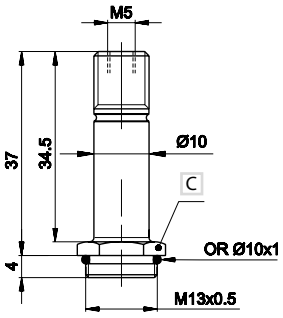

NO

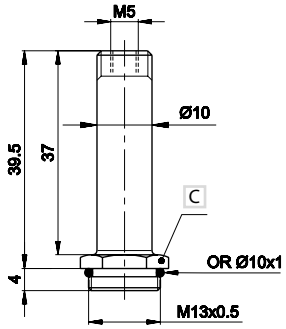

DETAIL OF MACHINING

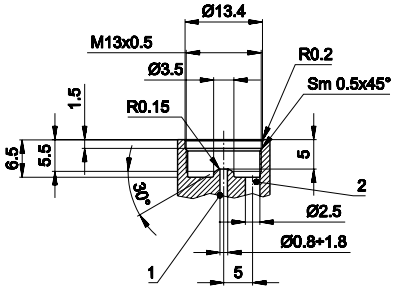

C Wrench 14

1 = Supply port

2 = Use

Material:

Sleeve	treated brass
Cores and spring	stainless steel
Seals	NBR

Upon request viton seals and stainless steel sleeves (only NC versions)

LOCKING RINGS FOR COILS ON SLEEVES

	Code	Way	Version	Material	Coil
	UAM 5211A	3/2 NC	= radial exhausts	technopolymer	Series U1
	UAM 5211B	2/2 NC	= radial exhausts	technopolymer	Series U1
	UAM 5213A	3/2 NO	= open exhausts	brass	Series U1

3/2 NC

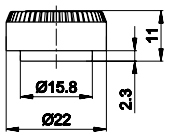

2/2 NC

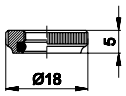

3/2 NO

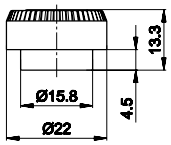

Electropilots are supplied without coil and connector

COILS

CSA/UL

Possibility of replacement without intervention in the pneumatic circuit
Other voltages available upon request
360° rotation on the pilot. Coil winding: H class
Ambient temperature: +14 ÷ +113 °F. Fluid temperature: +14 ÷ +203 °F.
The solenoid valves functioning with 100V-230V must be incorporated (EN60204-1)
Under continuous service a maximum temperature will not compromise the functioning of the coil provided that the working position is ventilated.
Protection class IP65, if used with connector.

U1 22 MM COIL



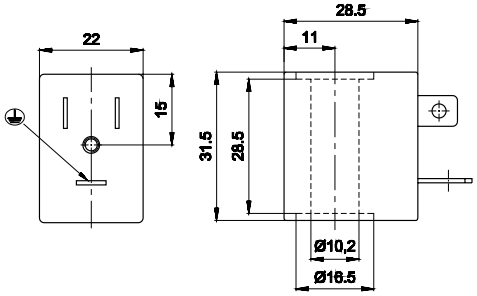

22 mm

10 mm Ø

Code	Duty cycle ED (a) %	Power consumption W		Tolerance tension %	Rated voltage	Weight lb (Kg)
		Hold	Inrush			
UDA 0050	100	3,5	3,5	±10	12 V DC	0.13 (0.06)
UDA 0051	100	3,5	3,5	±10	24 V DC	0.13 (0.06)
UDA 0106	100	5,4 VA (Max)	7,8 VA (Max)	±10	24 V AC/50-60 HZ	0.13 (0.06)
UDA 0108	100	5,4 VA (Max)	7,8 VA (Max)	±10	110 V AC/50-60 HZ	0.13 (0.06)
UDA 0124	100	5,4 VA (Max)	7,8 VA (Max)	±10	230 V AC/50-60 HZ	0.13 (0.06)





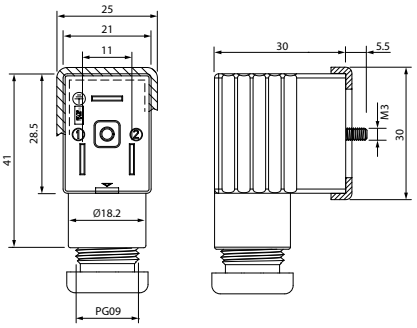

	Code		Size	Color	Characteristics
*	CONU1 000 01		.866 (22 mm)	BLACK	2 PINS
*	CONU2 024 00		.866 (22 mm)	TRANSPARENT	LED + VDR 0 - 24V
*	CONU2 110 00		.866 (22 mm)	TRANSPARENT	LED + VDR 110V
*	CONU2 250 00		.866 (22 mm)	TRANSPARENT	LED + VDR 220V

*: **UL 1977 AND CAN/CSA C22.2 NO. 182.3**

VDR: Fitted with varistors as surge protection device.

Electropilots are supplied without coil and connector

U3 30 MM COIL



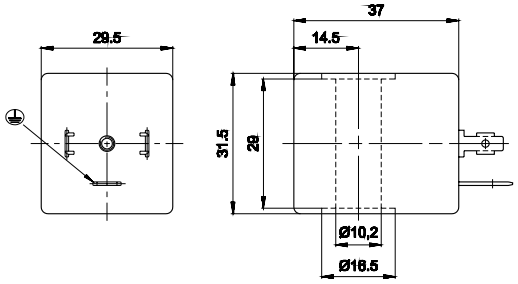

30 mm

10 mm

Code	Duty cycle ED (a) %	Power consumption W		Tolerance tension %	Rated voltage	Weight
		Hold	Inrush			
UDC 0301	100	2,5	2,5	±10	12 V DC	0.18 lb (0.08 kg)
UDC 0302	100	2,5	2,5	±10	24 V DC	0.18 lb (0.08 kg)
UDC 0307	100	3,3 VA (Max)	5 VA (Max)	±10	24 V AC/50-60 HZ	0.18 lb (0.08 kg)
UDC 0309	100	3,3 VA (Max)	5 VA (Max)	±10	110 V AC/50-60 HZ	0.18 lb (0.08 kg)
UDC 0310	100	3,3 VA (Max)	5 VA (Max)	±10	230 V AC/50-60 HZ	0.18 lb (0.08 kg)

(a) Solenoid valves operating at 110 V–230 V must be built-in (EN 60204-1).
In continuous operation, the operating temperature does not affect the operation of the coil, provided that the unit is installed in a well-ventilated area.





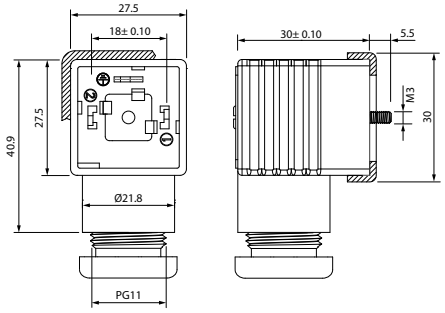

			Size	Color	Characteristics
*	CONU3 100 01	c UL us	30 - 36 mm	BLACK	2 PINS
*	CONU3 202 40	c UL us	30 - 36 mm	TRANSPARENT	LED + VDR 0 - 24V
*	CONU3 211 00	c UL us	30 - 36 mm	TRANSPARENT	LED + VDR 110V
*	CONU3 225 00	c UL us	30 - 36 mm	TRANSPARENT	LED + VDR 220V

*: **UL 1977 AND CAN/CSA C22.2 NO. 182.3**

VDR: Fitted with varistors as surge protection device.

Electropilots are supplied without coil and connector