Valves Series

Solenoid Valves



01V

Pg. 18.3

Inox Solenoid Valves



X1V

Pg. 18.42

Solenoid Valves



07V

Pg. 18.50

Namur Solenoid Valves



08V

Pg. 18.53

Miniature Electropilots U1



AA

Pg. 18.60

Universal Valves G1/8 - G1/4



CL - CM

Pg. 18.67

Rotary Hand Lever Valves



12V

Pg. 18.96

Micro Valves



AI JET

Pg. 18.99

Micro Valves



AI JET2

Pg. 18.104

16mm Valves - Mechanical and Manual Operators



CH

Pg. 18.107

Pedal Valves



AM

Pg. 18.110

FIELDBUS Valves Series

Fieldbus Electropneumatic Valves



16V

Pg. 18.114

Fieldbus Electropneumatic Valves



17V

Pg. 18.121

ISO Valves Series

Valves ISO 5599/1 - Sizes 1 - 2 - 3 - 4



BE

Pg. 18.156

COILS & CONNECTORS Series

Solenoids and Connectors



Coils & Connectors

Pg. 18.169

Click here to view the Valves Series on our Website

AIGNEP

MANUAL, PNEUMATIC, SOLENOID PILOT, FIELDBUS, AND ISO VALVES

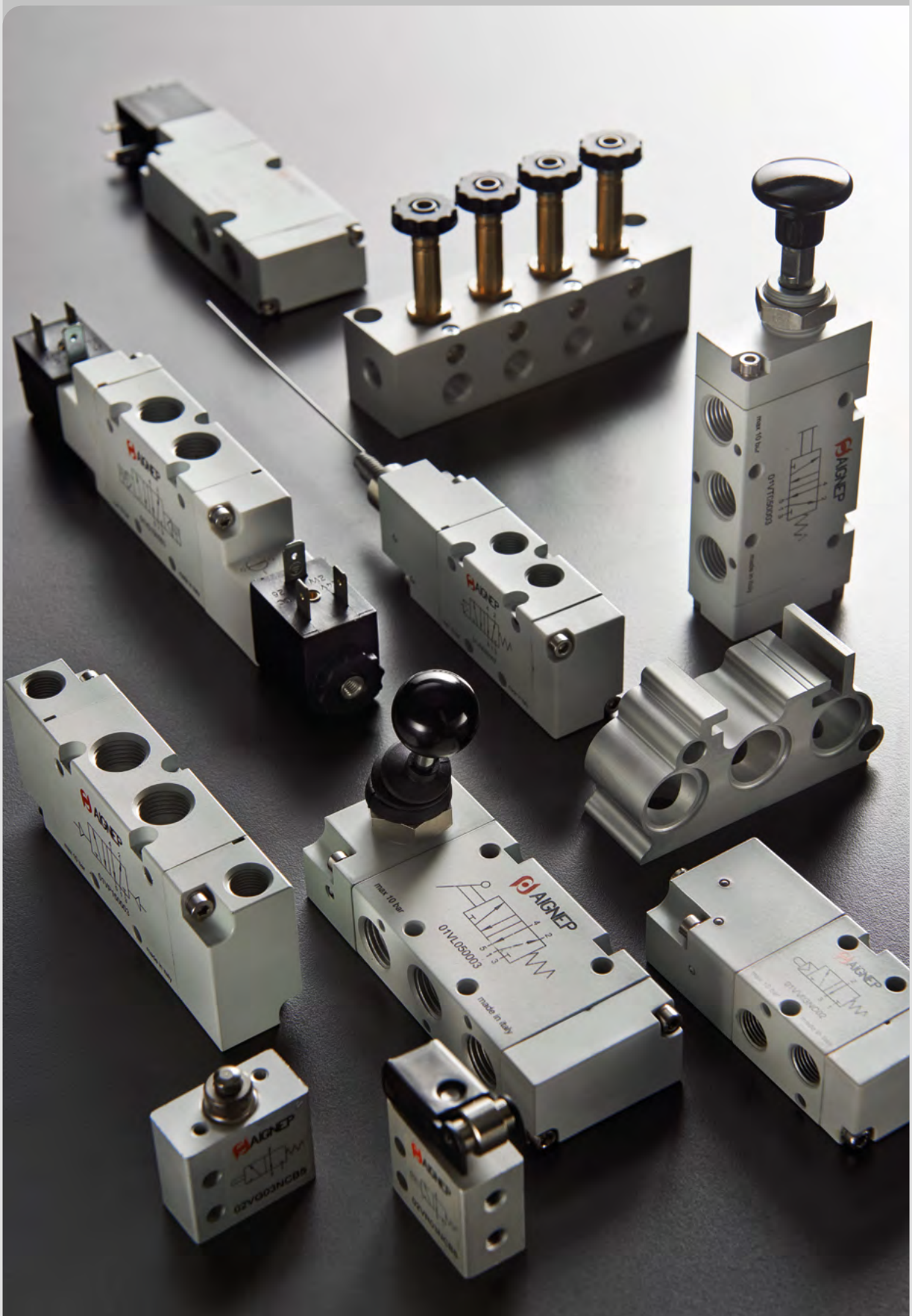

Valves Series

TECHNICAL CHARACTERISTICS



THREAD		G 1/8 - automatic Ø 5/32 - (4)
6 bar FLOW RATE with Δp 1 bar		30 Nl/min
OPERATING PRESSURE		0 ÷ 145 psi (0 ÷ 10 bar)
TEMPERATURE	min	14 °F -10 °C
	max	140 °F 60 °C
SOLENOID VOLTAGE		24V DC - 12V DC - 24V AC 110V AC - 220V AC
MINIMUM POWER		3W - 5VA
MANUAL CONTROL		BISTABLE
TORQUE OF THE TIGHTENING SOLENOID'S NUT		0.6 Nm

Reference Standard

1907/2006 REACH ✓ | 2011/65/CE RoHS ✓ | PED 2014/68/UE | ATEX 2014/34/UE

Component Parts and Materials

Anodized aluminum body
NBR seals

Series	Actuation	Reactuation	Ways	Function	Size	Solenoid
0 7 V	S	0	3	N C	0 2	S A
	S = Solenoid with manual override Y = Vacuum	0 = Monostable spring return	3 = 3/2	NO = Normally open NC = Normally closed	02 = 1/8 X1 = Ø 5/32 (4)	SA = SOL01012C1000 S1 = SOL01024A2000 SB = SOL01024C1000 SZ = SOL01024C3000 S2 = SOL01110A2000 S3 = SOL01220A2000 UA = SOLU1012C1000 U1 = SOLU1024A2000 UB = SOLU1024C1000 UZ = SOLU1024C3000 U2 = SOLU1110A2000 U3 = SOLU1220A2000 WA = SOLX1012C1000 W1 = SOLX1024A2000 WB = SOLX1024C1000 RA = SOLX2012C1000 R1 = SOLX2024A2000 RB = SOLX2024C1000 R2 = SOLX2110A2000 R3 = SOLX2220A2000

3/2

SOLENOID WITH MANUAL OVERRIDE

SOLENOID WITH MANUAL OVERRIDE



Code	Function	Size	Pack.
07V S0 3 NC 02	3/2 NC	G 1/8	1
07V S0 3 NC X1	3/2 NC	Ø 5/32 (4)	1
07V S0 3 NO 02	3/2 NO	G 1/8	1
07V S0 3 NO X1	3/2 NO	Ø 5/32 (4)	1
* 07V Y0 3 NC 02	3/2 NC	G 1/8	1

* Vacuum

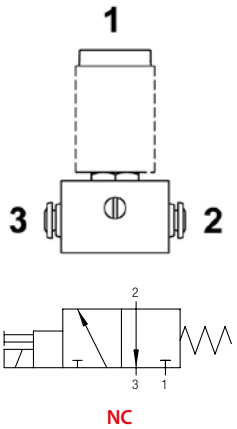

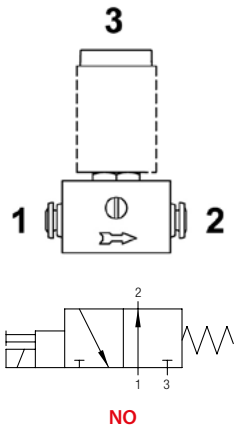

5/32 - (4)

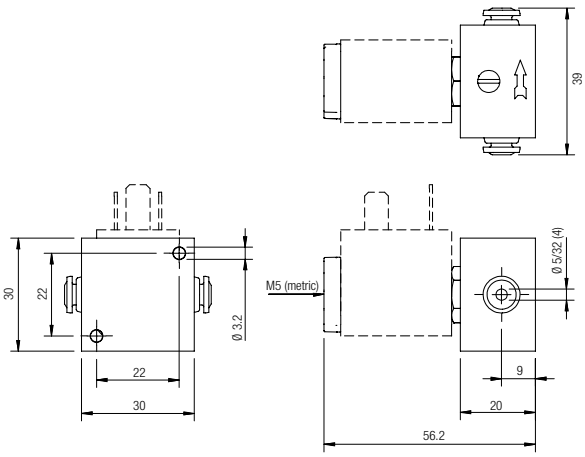

G1/8

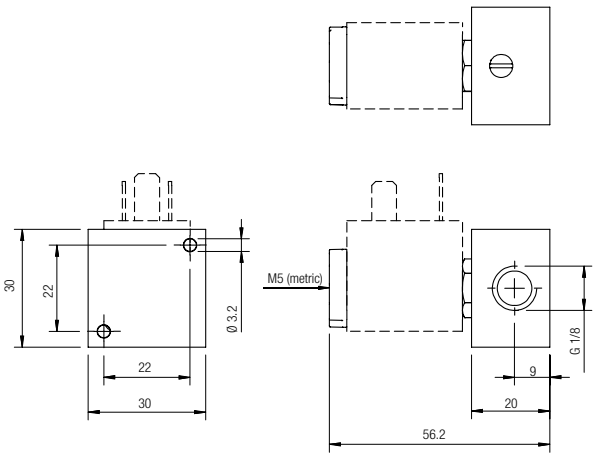

FIXED LENGTH MANIFOLD WITH MANUAL OVERRIDE

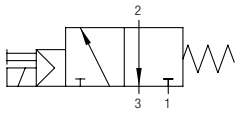

Code	Ways	B	L	Size	Pack.
07V B0 0 00 02	2	2.165 (55)	2.598 (66)	G 1/8	1
07V B0 0 00 03	3	3.051 (77.5)	3.484 (88.5)	G 1/8	1
07V B0 0 00 04	4	3.937 (100)	4.370 (111)	G 1/8	1
07V B0 0 00 05	5	4.823 (122.5)	5.256 (133.5)	G 1/8	1
07V B0 0 00 06	6	5.709 (145)	6.142 (156)	G 1/8	1
07V B0 0 00 07	7	6.594 (167.5)	7.028 (178.5)	G 1/8	1
07V B0 0 00 08	8	7.480 (190)	7.913 (201)	G 1/8	1
07V B0 0 00 09	9	8.366 (212.5)	8.799 (223.5)	G 1/8	1
07V B0 0 00 10	10	9.252 (235)	9.685 (246)	G 1/8	1

SOLENOID VALVES ON FIXED LENGTH MANIFOLD



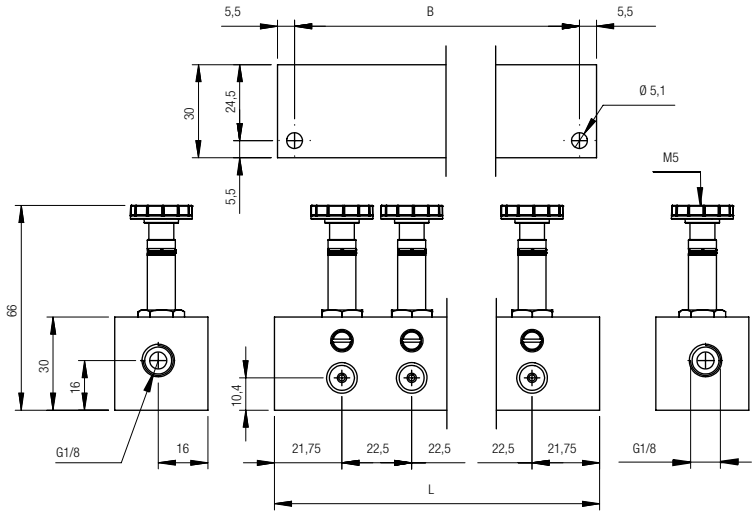

COILS AND CONNECTORS

COILS AND CONNECTORS COMPATIBILITY








		SOLU1	SOL01	SOLX1	SOLX2	U1	U3
		22 mm	22 mm	30 mm	22 mm	22 mm	30 mm
01V		■	■	■	■		
07V		■	■		■		
08V		■	■		■		
AA						■	■
CL-CM						■	
BE							■

SOLU1 COIL

22 mm

9 mm Ø



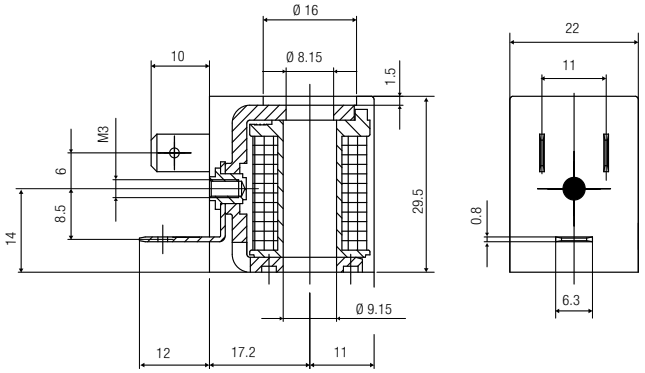

UL 1446 & CSA C22.2

Code	Short Code	Voltage	Power	Voltage tolerance	Ambient temperature	
					Min	Max
SOLU1 012 C 1 000	UA	12V DC	3W	±10 %	-4 °F (-20 °C)	+122 °F (+50 °C)
SOLU1 024 C 1 000	UB	24V DC	3W	±10 %	-4 °F (-20 °C)	+122 °F (+50 °C)
* SOLU1 024 C 3 000	UZ	24V DC	2W	±10 %	-4 °F (-20 °C)	+122 °F (+50 °C)
SOLU1 024 A 2 000	U1	24V AC	5VA	±10 %	-4 °F (-20 °C)	+122 °F (+50 °C)
SOLU1 110 A 2 000	U2	110V AC	5VA	±10 %	-4 °F (-20 °C)	+122 °F (+50 °C)
SOLU1 220 A 2 000	U3	220V AC	5VA	±10 %	-4 °F (-20 °C)	+122 °F (+50 °C)

* Solenoid Recommended (ECO-FRIENDLY), only for 01V - 07V - 08V.

INSULATION CLASS	H CEI EN 60085	ENCAPSULATION MATERIAL	RYNITE®	ELECTRICAL CONNECTIONS	INDUSTRIAL AMP FORM B - INDUSTRIAL *EN 175301-803* *(EX DIN 43650)*
AMBIENT TEMPERATURE	-4 °F +122 °F	PROTECTION DEGREE	IP65 IEC 60529 WITH CONNECTOR IP65	DUTY RATE	ED 100 %

SOL01 COIL

22 mm

9 mm Ø



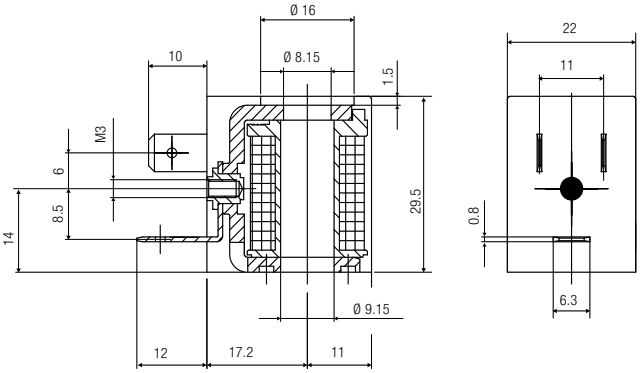

CE

Code	Short Code	Voltage	Power	Voltage tolerance	Ambient temperature	
					Min	Max
SOL01 012 C 1 000	SA	12V DC	3W	±10 %	-4 °F (-20 °C)	+122 °F (+50 °C)
SOL01 024 C 1 000	SB	24V DC	3W	±10 %	-4 °F (-20 °C)	+122 °F (+50 °C)
* SOL01 024 C 3 000	SZ	24V DC	2W	±10 %	-4 °F (-20 °C)	+122 °F (+50 °C)
SOL01 024 A 2 000	S1	24V AC	5VA	±10 %	-4 °F (-20 °C)	+122 °F (+50 °C)
SOL01 110 A 2 000	S2	110V AC	5VA	±10 %	-4 °F (-20 °C)	+122 °F (+50 °C)
SOL01 220 A 2 000	S3	220V AC	5VA	±10 %	-4 °F (-20 °C)	+122 °F (+50 °C)

* Solenoid Recommended (ECO-FRIENDLY), only for 01V - 07V - 08V.

INSULATION CLASS	F CEI EN 60085	ENCAPSULATION MATERIAL	PA	ELECTRICAL CONNECTIONS	INDUSTRIAL AMP FORM B - INDUSTRIAL *EN 175301-803* *(EX DIN 43650)*
AMBIENT TEMPERATURE	-4 °F +122 °F	PROTECTION DEGREE	IP65 IEC 60529 WITH CONNECTOR IP65	DUTY RATE	ED 100 %

SOLX1 COIL

22 mm

9 mm Ø



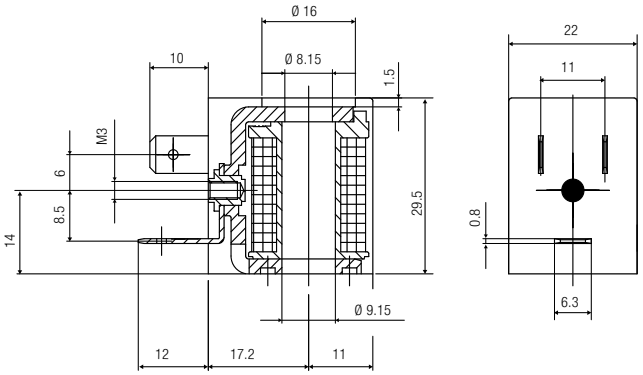

II 3G Ex nA IIC T5 Gc | II 3D Ex tc IIIC 95 °C Dc

Code	Short Code	Voltage	Power	Voltage tolerance	Ambient temperature	
					Min	Max
SOLX1 012 C 1 000	WA	12V DC	3W	±10 %	+5 °F (-15 °C)	+122 °F (+50 °C)
SOLX1 024 C 1 000	WB	24V DC	3W	±10 %	+5 °F (-15 °C)	+122 °F (+50 °C)
SOLX1 024 A 2 000	W1	24V AC	5VA	±10 %	+5 °F (-15 °C)	+122 °F (+50 °C)

INSULATION CLASS	F CEI EN 60085
ENCAPSULATION MATERIAL	PA
ELECTRICAL CONNECTION	INDUSTRIAL AMP FORM B - INDUSTRIAL *EN 175301-803* *(EX DIN 43650)*
AMBIENT TEMPERATURE	+5 °F +122 °F
PROTECTION DEGREE	IP65 IEC 60529 WITH CONNECTOR IP65
DUTY RATE	ED 100 %

SOLX2 COIL

30 mm

9 mm Ø



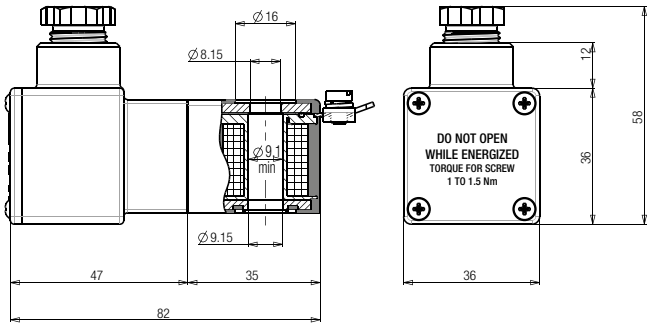

II 2G Ex db mb IIC T5 Gb | II 2D Ex tb IIIC T5 Db

Code	Short Code	Voltage	Power	Voltage tolerance	Ambient temperature	
					Min	Max
SOLX2 012 C 1 000	RA	12V DC	3W	±10 %	-58 °F (-50 °C)	+122 °F (+50 °C)
SOLX2 024 C 1 000	RB	24V DC	3W	±10 %	-58 °F (-50 °C)	+122 °F (+50 °C)
SOLX2 024 A 2 000	R1	24V AC	4,8VA	±10 %	-58 °F (-50 °C)	+122 °F (+50 °C)
SOLX2 110 A 2 000	R2	110V AC	4,8VA	±10 %	-58 °F (-50 °C)	+122 °F (+50 °C)
SOLX2 220 A 2 000	R3	220V AC	4,8VA	±10 %	-58 °F (-50 °C)	+122 °F (+50 °C)

Do not use with 01VB bases

With 08V NAMUR valves use the 08V01 spacer

INSULATION CLASS	F CEI EN 60085	ENCAPSULATION MATERIAL	PA	ELECTRICAL CONNECTIONS	PG9
AMBIENT TEMPERATURE	-58 °F +122 °F	PROTECTION DEGREE	IP66 IEC 60529	DUTY RATE	ED 100 %

COILS

CSA/UL

Possibility of replacement without intervention in the pneumatic circuit
Other voltages available upon request
360° rotation on the pilot. Coil winding: H class
Ambient temperature: +14 ÷ +113 °F. Fluid temperature: +14 ÷ +203 °F.
The solenoid valves functioning with 100V-230V must be incorporated (EN60204-1)
Under continuous service a maximum temperature will not compromise the functioning of the coil provided that the working position is ventilated.
Protection class IP65, if used with connector.

COILS U1

22 mm

10 mm Ø



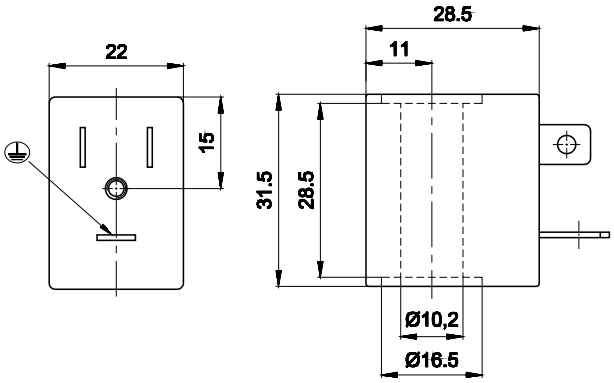

Code	Duty cycle ED (a) %	Power consumption W		Tolerance tension %	Rated voltage	Weight lb (Kg)
		Hold	Inrush			
UDA 0050	100	3,5	3,5	±10	12 V DC	0.13 (0.06)
UDA 0051	100	3,5	3,5	±10	24 V DC	0.13 (0.06)
UDA 0106	100	5,4 VA (Max)	7,8 VA (Max)	±10	24 V AC/50-60 HZ	0.13 (0.06)
UDA 0108	100	5,4 VA (Max)	7,8 VA (Max)	±10	110 V AC/50-60 HZ	0.13 (0.06)
UDA 0124	100	5,4 VA (Max)	7,8 VA (Max)	±10	230 V AC/50-60 HZ	0.13 (0.06)

COILS U3

30 mm

10 mm Ø

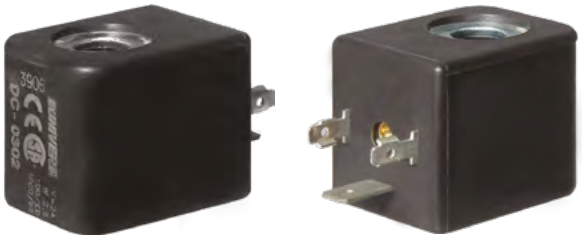

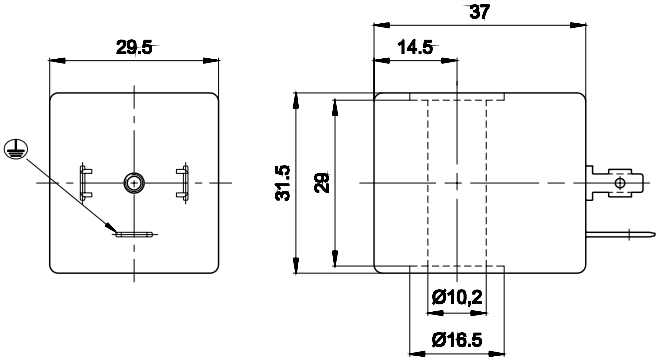

Code	Duty cycle ED (a) %	Power consumption W		Tolerance tension %	Rated voltage	Weight lb (Kg)
		Hold	Inrush			
UDC 0301	100	2,5	2,5	±10	12 V DC	0.18 (0.08)
UDC 0302	100	2,5	2,5	±10	24 V DC	0.18 (0.08)
UDC 0307	100	3,3 VA (Max)	5 VA (Max)	±10	24 V AC/50-60 HZ	0.18 (0.08)
UDC 0309	100	3,3 VA (Max)	5 VA (Max)	±10	110 V AC/50-60 HZ	0.18 (0.08)
UDC 0310	100	3,3 VA (Max)	5 VA (Max)	±10	230 V AC/50-60 HZ	0.18 (0.08)

(a) = 110V - 230V solenoid valves must be built-in (EN-60204-1)
Under continuous service a maximum temperature will not compromise the functioning of the coil provided that the working position is ventilated

CON01 - CONU1 CONNECTOR

22 mm





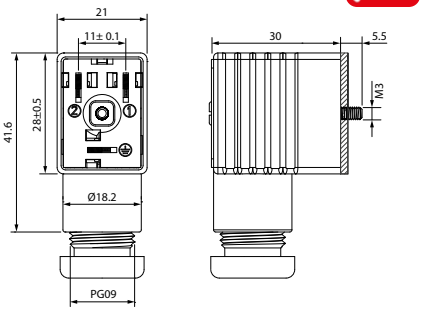

c UL us





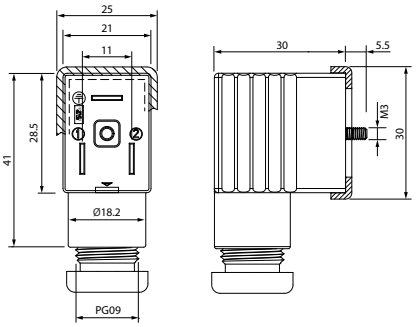

	Code		Size	Color	Characteristics
	CON01 000 01		.866 (22 mm)	BLACK	2 PINS
	CON02 024 00		.866 (22 mm)	TRANSPARENT	LED + VDR 0 - 24V
	CON02 110 00		.866 (22 mm)	TRANSPARENT	LED + VDR 110V
	CON02 250 00		.866 (22 mm)	TRANSPARENT	LED + VDR 220V
*	CONU1 000 01	c UL us	.866 (22 mm)	BLACK	2 PINS
*	CONU2 024 00	c UL us	.866 (22 mm)	TRANSPARENT	LED + VDR 0 - 24V
*	CONU2 110 00	c UL us	.866 (22 mm)	TRANSPARENT	LED + VDR 110V
*	CONU2 250 00	c UL us	.866 (22 mm)	TRANSPARENT	LED + VDR 220V

*: UL 1977 AND CAN/CSA C22.2 NO. 182.3

VDR: Fitted with varistors as surge protection device.

Wiring

CON01 000 01
CONU1 000 01

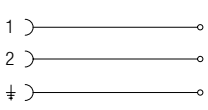

CON02 024 00 CON02 110 00 CON02 250 00
CONU2 024 00 CONU2 110 00 CONU2 250 00

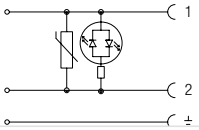

ELECTRICAL CONNECTION	INDUSTRIAL AMP FORM B - INDUSTRIAL *EN 175301-803 (EX DIN 43650)*	PROTECTION DEGREE	IP67 IEC 60529
CABLE DIAMETER	1/4 ÷ 5/16 (6 ÷ 8 mm)		

CONX1 CONNECTOR

22 mm



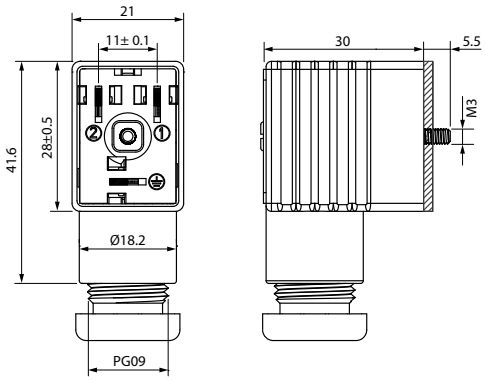

II 2G Ex e IIC T6 Gb | II 2D Ex tb IIIC T85°C Db

Code	Size	Color	Characteristics
CONX1 000 01	.866 (22 mm)	BLACK	2 PINS

Wiring

CONX1 000 01



ELECTRICAL CONNECTIONS	INDUSTRIAL AMP FORM B - INDUSTRIAL *EN 175301-803 (EX DIN 43650)*	PROTECTION DEGREE	IP67 IEC 60529	CABLE DIAMETER	1/4 ÷ 5/16 (6 ÷ 8 mm)

CON3 - CONU3 CONNECTOR

30 mm





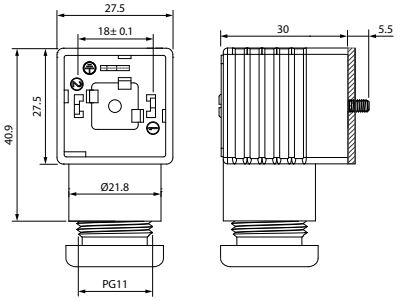

c UL us





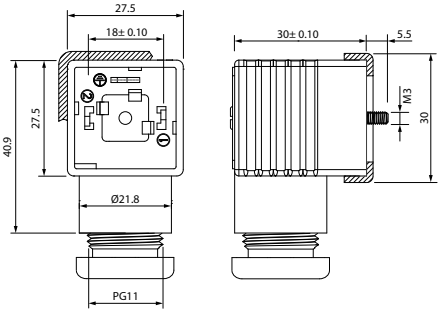

		Size	Color	Characteristics
	CON31 000 01	30 - 36 mm	BLACK	2 PINS
	CON32 024 00	30 - 36 mm	TRANSPARENT	LED + VDR 0 - 24V
	CON32 110 00	30 - 36 mm	TRANSPARENT	LED + VDR 110V
	CON32 250 00	30 - 36 mm	TRANSPARENT	LED + VDR 220V
*	CONU3 100 01	30 - 36 mm	BLACK	2 PINS
*	CONU3 202 40	30 - 36 mm	TRANSPARENT	LED + VDR 0 - 24V
*	CONU3 211 00	30 - 36 mm	TRANSPARENT	LED + VDR 110V
*	CONU3 225 00	30 - 36 mm	TRANSPARENT	LED + VDR 220V

*: UL 1977 AND CAN/CSA C22.2 NO. 182.3

VDR: Fitted with varistors as surge protection device.

Wiring

CON31 000 01
CONU3 100 01

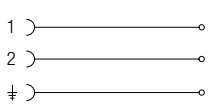

CON32 024 00 CON32 110 00 CON32 250 00
CONU3 202 40 CONU3 211 00 CONU3 225 00

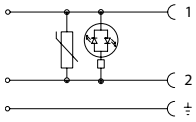

ELECTRICAL CONNECTIONS	**FORM A** *EN 175301-803 (EX DIN 43650)*	PROTECTION DEGREE	**IP67 IEC 60529**
CABLE DIAMETER	**6 ÷ 8 MM & 8 ÷ 11 MM**		