Quick Couplings

1/4 MULTISOCKET



80190 Series

Pag. 17.3 - 17.7

STAINLESS STEEL AISI 316 L MULTISOCKET



83190 Series

Pag. 17.8 - 17.9

3/8 MULTISOCKET



80190 Series

Pag. 17.10 - 17.11

3/8 B-SOCKET - TOP FLOW



80720 Series

Pag. 17.12 - 17.13

AC MINI



80110 Series

Pag. 17.14 - 17.15

1/4 INDUSTRIAL INTERCHANGE



80120 Series

Pag. 17.16 - 17.17

3/8 INDUSTRIAL INTERCHANGE



80130 Series

Pag. 17.18 - 17.19

Safety Quick Couplings

SAFETY COUPLERS



80620 Series

Pag. 17.21 - 17.22

BUTTON SAFETY COUPLERS



8B120 Series

Pag. 17.23 - 17.24

WB 360 Series

BLOW GUNS



WB 360 Series

Pag. 17.27

Click here to view the Quick Couplings Series on our Website

AIGNEP

QUICK DISCONNECT COUPLERS



Quick Couplings Series

TECHNICAL CHARACTERISTICS

Standard Reference

1907/2006 REACH ✓ | 2011/65/CE RoHS ✓ | PED 2014/68/UE | ISO 14743:2020 | SILICON FREE

*** While stocks last, replaced with 80720 series**

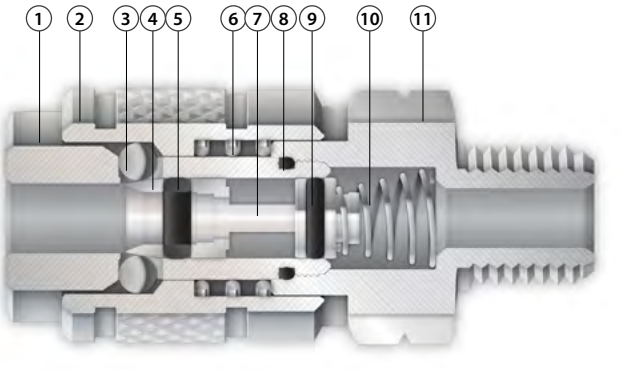

Component Parts and Materials

1	Nickel-plated brass body
2	Nickel-plated brass sleeve
3	420 stainless steel ball
4	Nickel-plated brass guide ring
5	NBR O-ring seal
6	302 stainless steel ring nut spring
7	Nickel-plated brass shutter
8	NBR O-ring seal
9	NBR O-ring seal
10	302 stainless steel shutter spring
11	Nickel-plated brass coupler

Pressure Rating

0 psi ~ 232 psi
0 bar ~ 16 bar
0 MPa ~ 1.6 MPa

Maximum static pressure

507 psi
35 bar
3.5 MPa

Temperatures

NBR
-4 °F ~ 176 °F
-20 °C ~ 80 °C

3/8 INDUSTRIAL

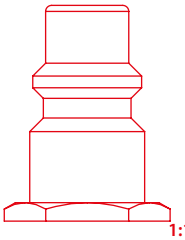

DN
9 mm

Flow Rate — CFM (Nl/min)

Plug	87 psi Δ 14.5	87 psi Δ 7.2	87 psi Δ 0 (Exhaust Free)
3/8 IND.	88.28 (2500)	72.39 (2050)	116.53 (3300)

Media

- Compressed air

For other fluids, consult Aignep's technical department.

3/8" INDUSTRIAL INTERCHANGE

80131

3/8" INDUSTRIAL MALE

Code	Usa Ref	A NPTF	B	C	D	CH	Pack
80131 00 001	80131-06	3/8	.512 (13)	2.362 (60)	1.102 (28)	.945 (24)	10
80131 00 002	80131-08	1/2	.669 (17)	2.480 (63)	1.102 (28)	.945 (24)	10



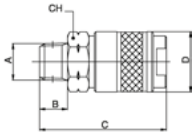

80132

3/8" INDUSTRIAL FEMALE

Code	Usa Ref	A NPTF	B	C	D	CH	Pack
80132 00 001	80132-06	3/8	.531 (13.5)	2.343 (59.5)	1.102 (28)	.945 (24)	10
80132 00 002	80132-08	1/2	.689 (17.5)	2.500 (63.5)	1.102 (28)	.945 (24)	10



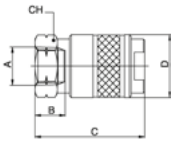

80231

3/8" INDUSTRIAL MALE PLUG

Code	Usa Ref	A NPTF	B	C	CH	Pack
80231 00 01 04 NB	80231-06	3/8	.512 (13)	1.732 (44)	.748 (19)	10
80231 00 01 05 NB	80231-08	1/2	.669 (17)	1.909 (48.5)	.866 (22)	10



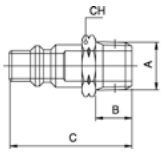

80232

3/8" INDUSTRIAL FEMALE PLUG

Code	Usa Ref	A NPTF	B	C	CH	Pack
80232 00 01 04 NB	80232-06	3/8	.531 (13.5)	1.634 (41.5)	.787 (20)	10
80232 00 01 05 NB	80232-08	1/2	.689 (17.5)	1.791 (45.5)	.945 (24)	10



