Quick Couplings

1/4 MULTISOCKET



80190 Series

Pag. 17.3 - 17.7

STAINLESS STEEL AISI 316 L MULTISOCKET



83190 Series

Pag. 17.8 - 17.9

3/8 MULTISOCKET



80190 Series

Pag. 17.10 - 17.11

3/8 B-SOCKET - TOP FLOW



80720 Series

Pag. 17.12 - 17.13

AC MINI



80110 Series

Pag. 17.14 - 17.15

1/4 INDUSTRIAL INTERCHANGE



80120 Series

Pag. 17.16 - 17.17

3/8 INDUSTRIAL INTERCHANGE



80130 Series

Pag. 17.18 - 17.19

Safety Quick Couplings

SAFETY COUPLERS



80620 Series

Pag. 17.21 - 17.22

BUTTON SAFETY COUPLERS



8B120 Series

Pag. 17.23 - 17.24

WB 360 Series

BLOW GUNS



WB 360 Series

Pag. 17.27

Click here to view the Quick Couplings Series on our Website

AIGNEP

QUICK DISCONNECT COUPLERS



Quick Couplings Series

TECHNICAL CHARACTERISTICS

Standard Reference

1907/2006 REACH ✓ | 2011/65/CE RoHS ✓ | PED 2014/68/UE | ISO 14743:2020 | SILICON FREE

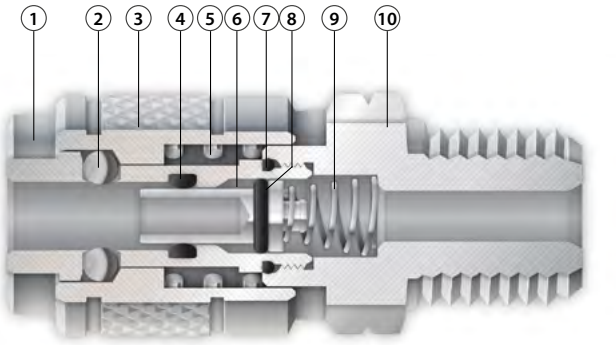

Component Parts and Materials

1. Nickel-plated brass body
2. 420 stainless steel ball
3. Nickel-plated brass sleeve
4. NBR O-ring seal
5. 302 stainless steel ring nut spring
6. Nickel-plated brass shutter
7. NBR O-ring seal
8. NBR O-ring seal
9. 302 stainless steel shutter spring
10. Nickel-plated brass coupler

Pressure Rating

0 psi ~ 232 psi
0 bar ~ 16 bar
0 MPa ~ 1.6 MPa

Maximum static pressure

507 psi
35 bar
3.5 MPa

Temperatures

NBR
-4 °F ~ 176 °F
-20 °C ~ 80 °C

AC MINI

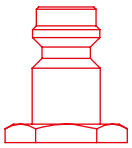

1:1

DN
5 mm

Flow Rate

CFM (Nl/min)

87 psi Δ 14.5	87 psi Δ 7.2	87 psi Δ 0 (Exhaust Free)
8.48 (240)	6.71 (190)	11.3 (320)

Media

- Compressed air

For other fluids, consult Aignep's technical department.

80111

AC MINI MALE

Code	Usa Ref	A NPTF	B	C	D	CH	Pack
80111 00 001	80111-02	1/8	.335 (8.5)	1.496 (38)	.709 (18)	.630 (16)	10
80111 00 002	80111-04	1/4	.512 (13)	1.673 (42.5)	.709 (18)	.630 (16)	10
80111 00 003	80111-06	3/8	.512 (13)	1.673 (42.5)	.709 (18)	.748 (19)	10



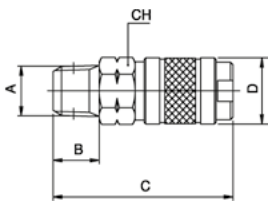

80112

AC MINI FEMALE

Code	Usa Ref	A NPTF	B	C	D	CH	Pack
80112 00 001	80112-02	1/8	.335 (8.5)	1.457 (37)	.709 (18)	.630 (16)	10
80112 00 002	80112-04	1/4	.531 (13.5)	1.614 (41)	.709 (18)	.669 (17)	10
80112 00 003	80112-06	3/8	.531 (13.5)	1.614 (41)	.709 (18)	.787 (20)	10



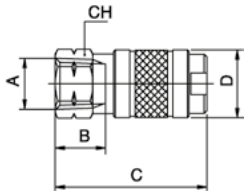

80211

AC MINI MALE PLUG

Code	Usa Ref	A NPTF	B	C	CH	Pack
80211 00 01 02 NB	80211-02	1/8	.335 (8.5)	1.122 (28.5)	.551 (14)	10
80211 00 01 03 NB	80211-04	1/4	.512 (13)	1.319 (33.5)	.669 (17)	10
80211 00 01 04 NB	80211-06	3/8	.512 (13)	1.319 (33.5)	.748 (19)	10



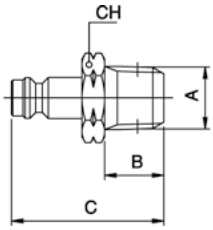

80212

AC MINI FEMALE PLUG

Code	Usa Ref	A NPTF	B	C	CH	Pack
80212 00 01 02 NB	80212-02	1/8	.374 (9.5)	1.063 (27)	.551 (14)	10
80212 00 01 03 NB	80212-04	1/4	.531 (13.5)	1.220 (31)	.669 (17)	10
80212 00 01 04 NB	80212-06	3/8	.531 (13.5)	1.220 (31)	.787 (20)	10



