AIGNEP

INSTALLATION INSTRUCTION

Infinity Series

Table of Contents

1 INTRODUCTION 4
1.1 MANUAL SAFETY WARNINGS 4
1.2 MAIN FEATURES OF THE INFINITY® SERIES 5
2 GENERAL SAFETY INFORMATION 6
3 LIFTING AND TRANSPORTING 7
4 SAFETY OF INSTALLATION AND MAINTENANCE 8
4.1 DESIGN PREREQUISITES 8
4.2 INSTALLATION AND COMMISSIONING RULES 8
4.3 INFINITY® SYSTEM INSTALLATION IN EXPLOSION HAZARD ENVIRONMENT 10
4.3.1 TUBE CONNECTION MODE IF THERE IS A LACK OF ELECTRICAL CONTINUITY 10
5 INSTALLATION INSTRUCTIONS 11
5.1 INSTALLATION GUIDELINES 11
5.2 SYSTEM TESTING 11
5.3 DISASSEMBLY OF INFINITY® PIPING 11
5.4 INSTALLATION TOOLS 12
5.5 IDENTIFICATION AND USE OF TUBES 13
5.5.1 TUBE MARKING 13
5.5.2 CONNECTION INDICATOR & DRILLING LOCATOR 13
5.5.3 TUBE PREPARATION AND ASSEMBLY 14
5.5.4 ASSEMBLY OF TUBES UP TO Ø 40 15
5.5.5 ASSEMBLY OF TUBES Ø 50 - Ø 63 17
5.5.6 ASSEMBLY OF TUBES Ø 80 - Ø 110 - Ø 168 19
5.5.7 INFINITY® HOSE ASSEMBLY 21
5.5.8 APPLICATION OF TUBE REDUCTIONS 23
5.6 CONNECTION TO EXTERNAL DEVICES 25
5.7 SUSPENSION FIXING OF THE INFINITY® SYSTEM 26
5.7.1 HEAT-INDUCED DILATATIONS AND CONTRACTIONS 27
5.8 INSTALLATIONS ON EXISTING SYSTEMS 28
5.8.1 ADD A NEW DROP LINE WITHOUT A VALVE 28
5.8.2 ADD A NEW DROP LINE WITH VALVE 30

1 INTRODUCTION

The instructions in this manual are intended for use by qualified personnel for the installation and maintenance of INFINITY® series compressed air and inert gas fittings and piping.

For any information, consult the AIGNEP website at www.aignep.com or contact the AIGNEP TECHNICAL OFFICE.

A list of AIGNEP branches can be found on the web page: https://www.aignep.com/contatti/.

1.1 MANUAL SAFETY WARNINGS

To highlight information of relevant importance, as required by current European Directives, we have chosen to associate it with a different graphic for immediate identification of the nature of the information.

Note: to highlight important generic information.

NOTE

The important notation to be highlighted is inserted in this area.

Safety warnings: inform, at a general level, about present or potential risks.

CAUTION

Indicates a reminder to apply safety practices or calls attention to unsafe practices that could cause personal injury or damage to the machine or components or the environment.

WARNING

Indicates that there is a danger that may cause injury or death if appropriate precautions are not taken.

DANGER

Indicates that there is a serious inherent danger that could result in a high probability of death or serious injury if appropriate precautions are not taken.

1.2 MAIN FEATURES OF THE INFINITY® SERIES

The INFINITY® range, engineered and manufactured entirely in Italy by AIGNEP, stands as an alternative to components made of galvanized steel or glued plastic material, enabling modern technological installations.

The availability of a single Quick Connect technology for pipes of all diameters limits the need to use specific and expensive tools.

Metal pipes and fittings ensure strength and performance.

Main advantages

- Energy Saving and Eco-friendly solution
- High air flow with low pressure drop
- Patented condensing trap system
- From Ø 20 up to Ø 168 mm, full metal solution
- Easy, Quick and Safe Installation
- Wide range of Fittings, Accessories & Filters
- Automatic push-in fittings for compressed air system

Applications

- Metalworking & Chemical
- Food&Beverage
- Automotive & Energy
- Garages
- Mining
- Railways and Aircraft Service
- Plastic & Textile
- Pharmaceutical & Cosmetics
- Tabacco Processing
- Shipyards

Pressre rating

Vacuum ~ 232 PSI

-0.99 bar ~ 20 bar

-0.099 MPa ~ 2.0 MPa

Temperature rating

-4° F ~ 176° F

-20° C ~ 80° C

Approved for indoor and outdoor applications

Not approved for bare underground installation

Technical characteristics of pipes

Extruded aluminum	UNI 9006/1 Al Mg 0.5 Si 0.4 Fe 0.2
Designations UNI EN 573-3	EN AW 6060 T6
Surface treatment	Electrostatic painting
Specific weight	2.70 Kg/dm^3
Expansion coefficient	0.024 mm/(m °C)

⚠ CAUTION

INFINITY® tubes and fittings are designed to carry compressed air, vacuum and inert gases (such as nitrogen and argon).

Contact the AIGNEP technical department to verify compatibility with inert gases.

⚠ CAUTION

INFINITY® cannot be used to transport finished products such as water, foodstuffs, chemicals, industrial powders, etc.

INFINITY® cannot be encased in walls or floors. Inspectionable ducts must be used for wall or underfloor installation.

INFINITY® cannot be used as a support for other industrial pipes or electrical conduits.

INFINITY® must be protected from vibration, violent shocks, extreme weather conditions, and animal droppings.

INFINITY® must be protected from the saline environment. Pipes and fittings must be shielded.

INFINITY® fittings and pipes are extremely resistant to UV radiation, however, it is recommended that they be shielded in environments subject to prolonged exposure.

2 GENERAL SAFETY INFORMATION

WARNING

It is the responsibility of the employer to ensure that all personnel involved in the installation, testing, maintenance, and use of the product read the contents of this manual and other instructions provided by AIGNEP.

Do not use INFINITY® series components for purposes other than those recommended.

Never use a damaged or malfunctioning INFINITY® series component.

The use of INFINITY® series components with other components not approved by AIGNEP is not permitted.

Failure to follow these safety guidelines may expose personnel to dangerous situations that, if not avoided, may result in death or serious injury.

WARNING

It is the employer's responsibility to make personnel aware of all company safety rules, codes and regulations, as well as instructions and establish programs for:

- Train and designate operators.
- Train and designate inspection and maintenance personnel.
- Ensure that safety procedures are followed.
- Ensure that all accidents or safety violations are properly reported and that appropriate corrective action is taken before further use.
- Ensure that all warning signs and labels are observed and that manuals supplied with the product are read.
- Review applicable health and safety standards and other recognized safety sources to ensure safe installation and operation of INFINITY® series components.
- Follow all country or region-specific rules, regulations and standards that apply to operator/user training.

WARNING

The information presented in this manual is to be used in conjunction with the workplace safety program.

It is the responsibility of each individual to ensure that they are working safely and in compliance with all applicable standards and regulations (local, state, national, federal, etc.).

Keep the work area free of hazards.

Assess hazards, make a list and discuss them with appropriate personnel.

Know how to contact help quickly.

WARNING

Keep people not involved in the work in progress at a safe distance from your work area.

Keep long hair tied back.

Do not wear loose clothing.

Do not wear jewelry.

WARNING

- Identify, read, understand, and follow all hazard, warning, caution, and operation instructions on the product and in all manuals. Failure to follow the safety precautions described in the manuals supplied with the product, in this manual, or in any of the decals and nameplates attached to the product may result in death, serious injury, or property damage.
- Verify that all labels and nameplates are in place and legible. Do not remove them.
- If INFINITY® series components are repainted, ensure that labels and nameplates are protected and that the protection is removed after painting.
- It is the user's responsibility to make this information available to others.

3 LIFTING AND TRANSPORTING

The following Personal Protective Equipment (PPE) is prescribed for workers involved in transporting and handling crates containing the material:

SAFETY SHOES

PROTECTIVE GLOVES

PROTECTIVE CLOTHING

SAFETY HELMET

DANGER

Mechanical hazards are present during loading, unloading, transportation, handling and assembly of machine parts.

DANGER

The passage of suspended loads over places where there are people for whom their falling may pose a danger must be prohibited.

CAUTION

These operations must be carried out by qualified and properly trained personnel.

Failure to follow these warnings may expose you to health hazards and equipment damage.

During material handling ensure adequate maneuvering space in order to ensure the safety of personnel.

Interdict unauthorized persons from accessing the area designated for loading/unloading and handling operations.

Health hazards from improper lifting technique may occur during manual lifting of objects.

Adopt the following instructions to avoid exposing yourself to lifting injuries.

1. Hold the weight to be lifted near the feet, which will be in line with the shoulders. Hold the object near the toes of the feet.
2. Bend the legs, keeping the back straight without arching it or going too far forward with the torso, and grasp the object with the hands.
3. Lift the weight, not by forcing with the arms, but by extending the legs, using the thigh and gluteal muscles. By keeping the back straight, the weight is distributed evenly in the spine.

CAUTION

Wrong way of lifting loads:

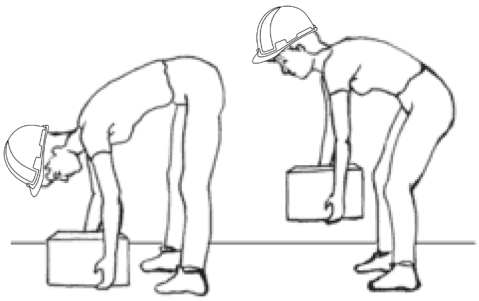

4 SAFETY OF INSTALLATION AND MAINTENANCE

4.1 DESIGN PREREQUISITES

- The system must be designed in accordance with the technical standards and safety legislation in force in the country of use.
- The system must be properly sized and provide, as required, appropriate isolating valves and safety systems to cut off the supply of compressed air or inert gas.
- Piping to and from INFINITY® series components must conform to the operational and safety requirements of the system.
- The operating pressure must not exceed the maximum rated value of the INFINITY® series components.
- The working temperature must be between -20 °C and +80 °C.

4.2 INSTALLATION AND COMMISSIONING RULES

⚠ CAUTION

Installation, upgrades and maintenance of the INFINITY® system and components must be performed by trained and authorized technical personnel.

Read the instructions provided by AIGNEP carefully before installing and using this product.

The following Personal Protective Equipment (PPE) is prescribed for personnel involved in the installation and maintenance of the product:

SAFETY SHOES

PROTECTIVE GLOVES

SAFETY GLASSES

PROTECTIVE CLOTHING

SAFETY HELMET

IMBRACEMENT
(for work performed at height)

⚠ CAUTION

Carefully inspect the arrived product at the installation site for damage. Check particularly carefully that protruding parts of components have not been impacted. For any item that appears damaged, even if slightly, its fitness for use should be carefully assessed.

WARNING

Prior to any installation activities, particularly when extending existing systems, ensure that all circuit feeding sources are excluded and the system is de-pressurized.

DANGER

Take special care to avoid choking hazards when working with gases other than air.

- Keep the work area clean, tidy, ventilated and lighted.
- Pay attention to other technological equipment that may be present. Do not contact or damage cables, conduits, pipes or piping that may contain electrical wires, explosive gases or harmful liquids.
- Install INFINITY® series components according to the instructions provided by AIGNEP. Do not make changes to the components or use different components, as they may adversely affect the safety and performance of the system.

NOTE

AIGNEP accepts no responsibility for tampering with or modifications made to INFINITY® series components by third parties.

Such unauthorized tampering, modification or installation, in addition to voiding the warranty, may result in damage to the system and to persons.

WARNING

In the case of working at heights, to prevent damage to people or property due to falling tools, use the appropriate fall protection bags and accessories.

- Do not remove, adjust, bypass, change, modify or replace disconnecting or safety devices in the installation.
- During installation, cover exposed parts to prevent dust and materials from entering.
- After installation, proceed carefully to functionally check the system by gradually energizing it.

4.3 INFINITY® SYSTEM INSTALLATION IN EXPLOSION HAZARD ENVIRONMENT

Some activities can generate large amounts of electrostatic charge due to dust handling.

In these environments, to avoid the generation of electrostatic charges that can be the cause of triggers and lead to explosions, it is always advisable to ground the INFINITY® distribution system.

It is most important to make sure that no part of the equipment is isolated from an effective ground, so it is advisable to check the electrical continuity of the system at several points using a multimeter.

In installations with a diameter greater than 50 mm (aluminum fittings), a connection between tubes should always be provided to create a path for the current to flow through.

In systems with a diameter smaller than 50 (brass pipe fittings), electrical continuity is ensured by proper installation, however, if points are found during testing with the multimeter where there is no electrical continuity, it is necessary to connect tubes together in the way described later.

4.3.1 TUBE CONNECTION MODE IF THERE IS A LACK OF ELECTRICAL CONTINUITY

1. Remove the layer of paint at the point where the pipe contacts the clamp or collar.
2. Tighten the clamp/collar around the pipe.
3. Connect a copper cable between the two clamps of the clamp or collar.

After verifying the equipotentiality of the entire system and thus that there are no points in the system that are electrically isolated, connect the INFINITY® air distribution structure to the ground conductor of the electrical system.

5 INSTALLATION INSTRUCTIONS

5.1 INSTALLATION GUIDELINES

DANGER

Make sure there is no pressure in the system before starting any maintenance, repair or modification work.

- INFINITY® genuine pipes and fittings only should be used when installing, adjusting or repairing an INFINITY® system.
- INFINITY® full length pipes delivered from factory are ready for connection with fittings. Installers must use the specified equipment to cut the pipe. The cut of pipe must be perpendicular.
- Installers must always deburr pipes inside and outside after cutting. Installers must remove residual cutting material from pipes.
- INFINITY® most recommended form of installation for the primary line is a loop. For safety reasons INFINITY® primary line must be installed at minimum 2.5 mt (8.2 ft.) from the ground.
- INFINITY® primary line should be installed with a 1-2% slope to convey condensing water and impurities to discharge points installed further down. Installer must use the proper drop fittings (90259 - 90250 - 90975 - 90976 - 90260 - 90986 - 90010) to convey and remove residual water or impurity from the primary line
- INFINITY® condensate discharge fittings and drop lines must be installed at specific height between 1-1.2 mt (3.2-4 ft.).
- INFINITY® ball valves (90700 - 90705 - 90710 - 90720 - 90721 - 90725 - 90726) are full flow. For safety, quick inspection and further modifications, we recommend to foresee the installation of ball valves along the primary line or nearby a branch point to secondary lines.

5.2 SYSTEM TESTING

- Before using the INFINITY® system, installers must ensure that all fittings and tubes are properly connected according to specific installation instructions and the necessary test controls.
- Before using the INFINITY® system installers must ensure that tubes are fixed correctly to the supports.
- Start the system by applying a test pressure of 1 bar (15 psi) to detect any leaks or imperfect joints.
- After performing an inspection, increase the pressure gradually and constantly (max. 1 bar every 5 minutes).
- Keep performing inspections for leakages or imperfect connections until the final pressure.

5.3 DISASSEMBLY OF INFINITY® PIPING

DANGER

Make sure there is no pressure in the system before starting any disassembly operation.

- Loosen nut to disengage bite ring (clamping washer). With nut loosen you still may need to push tube into fitting to release bite ring.
- Pull tube out of fitting.
- Follow installations instructions for reassembling INFINITY® Piping System.

NOTE

See pages 15 and 17 for more details.

5.4 INSTALLATION TOOLS

Pipe cutter 90870 00 001 20-63 mm 90870 00 002 50-110 mm 90870 00 003 110-168 mm	De-burrer 90880 00 001 D 20, 25, 32, 40 mm	Dima mark tube 90885 00 001 20, 25, 32, 40 mm tubes
Drilling tool for Infinity® tubes 90252 00 001 25, 32, 40, 50, 63 mm tubes	Tool for saddle clamp connector 90241 00 001 D 25 90241 00 002 D 32, 40, 80, 110 168 3/4, 168 1" 90241 00 003 D 50, 63 90241 00 004 D 168 1"1/2, 168 2"	Drilling jig 90242 00 001 D 32 mm 90242 00 002 D 40 mm 90242 00 003 D 50 mm 90242 00 004 D 63 mm
Drilling jig 90249 00 002 D 25 90249 00 003 D 32 90249 00 004 D 40 90249 00 005 D 50 90249 00 006 D 63	Drilling jig 90249 00 007 D 80 mm 90249 00 008 D110 mm 90249 00 009 D 168 3/4, 168 1" 90249 00 010 D 168 1" 1/2, 168 2" 90249 00 011 D 110 2"	
Tools kit Infinity® case VAL03		

5.5 IDENTIFICATION AND USE OF TUBES

5.5.1 TUBE MARKING

1. Product code and tube diameter
2. Pressure range
3. Temperature range
4. Production batch number

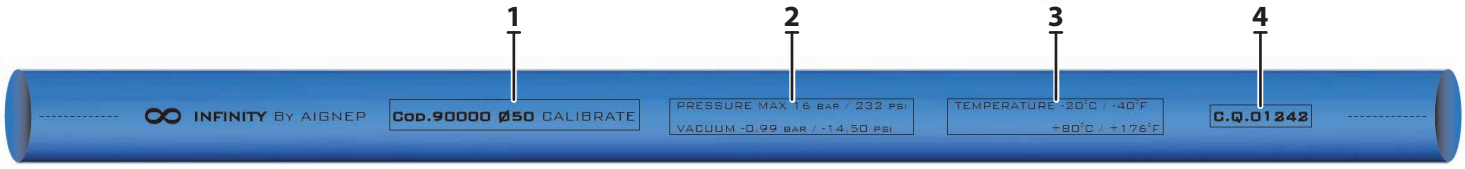

5.5.2 CONNECTION INDICATOR & DRILLING LOCATOR

1. Pointing arrow for safe connection
2. Drilling line. There are two drilling lines on each tubes
3. Identification tube colors:
   - Compressed air
   - Vacuum and inert gases
   - Nitrogen

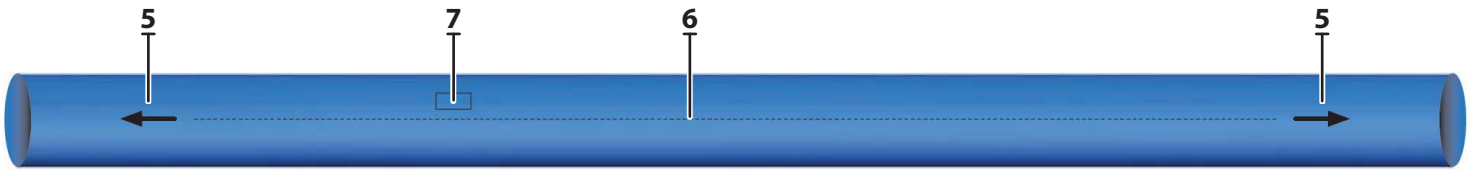

5.5.3 TUBE PREPARATION AND ASSEMBLY

1. Cut the pipe to length using tool 90870.

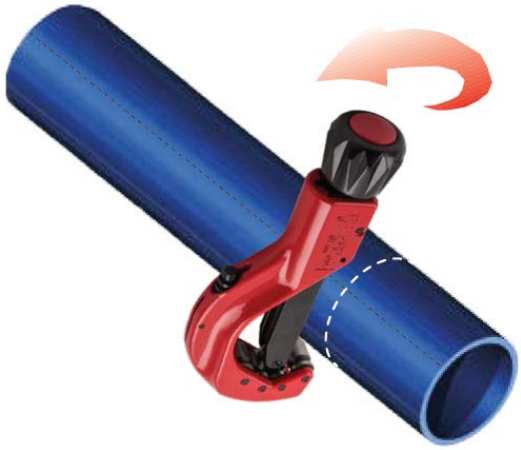

2. Deburr the ends of the pipe (inner and outer diameter) using the appropriate deburrer 90880.

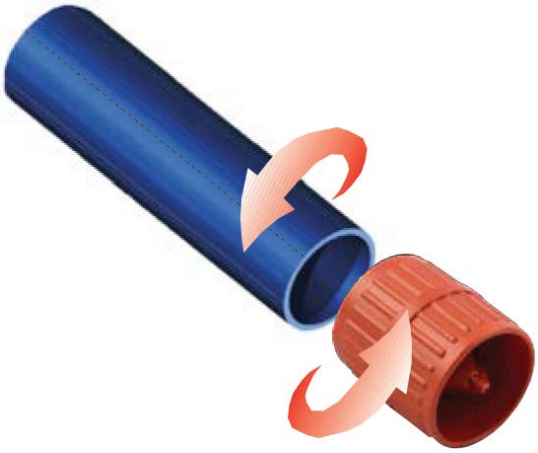

5.5.4 ASSEMBLY OF TUBES UP TO Ø 40

NOTE

Ø 20 - Ø 25 - Ø 32 - Ø 40 fittings are supplied assembled and pre-tensioned.

1. Mark on the pipe (which has already been deburred) a reference line as given in the table below and as shown in the figure.

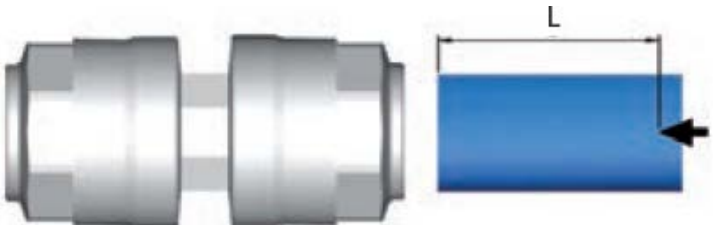

Ø mm	L mm
20	31.5
25	38.5
32	46
40	52

NOTE

The tube deburring operation is described in Section 3.3.3.

2. Insert the tube and push it firmly to the seat at the bottom of the fitting.

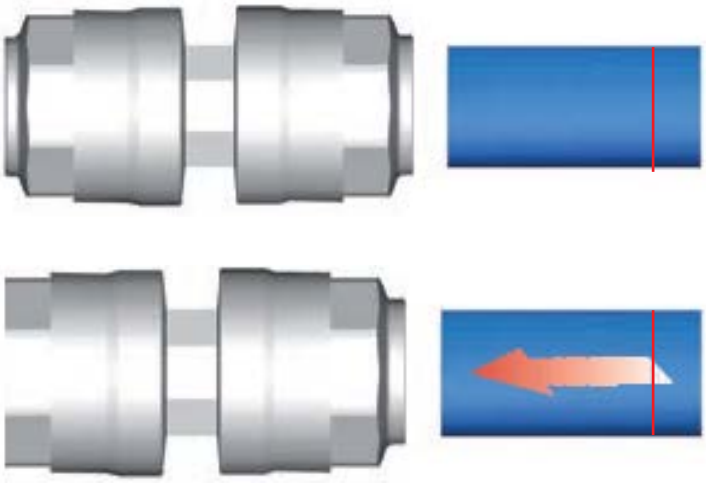

3. The line drawn in step 1) is at the outer edge of the fitting if the assembly was done correctly. Also try pulling the hose back slightly to check the tightness of the fitting.

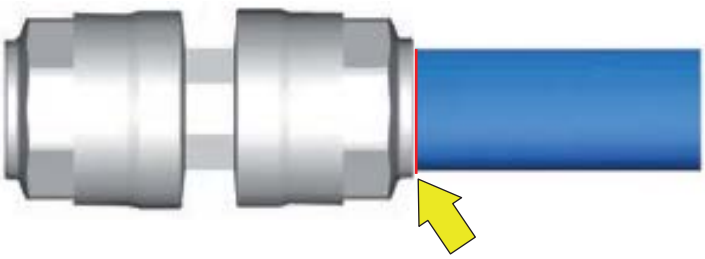

4. To disassemble the fitting, the locking ring must be disengaged by loosening the ring nut and eventually pushing the tube into the fitting.

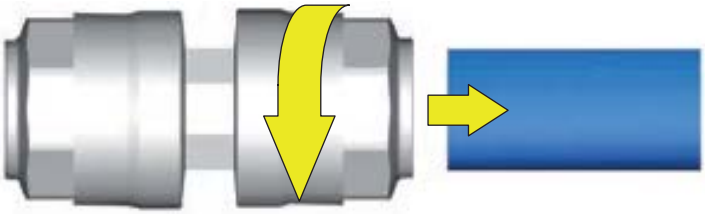

5. When disassembling the fitting, use the tightening torques shown in the table below to reassemble the fitting.

Ø mm	Torque value
20	***3 Nm*** (26 In - lbs)
25	***3 Nm*** (26 In - lbs)
32	***4 Nm*** (35 In - lbs)
40	***6.5 Nm*** (58 In - lbs)

5.5.5 ASSEMBLY OF TUBES Ø 50 - Ø 63

NOTE

Ø 50 - Ø 63 fittings are supplied assembled and pre-tensioned.

1. Mark on the pipe (which has already been deburred) a reference line as given in the table below and as shown in the figure.

Ø mm	L mm
50	63.5
63	57.5

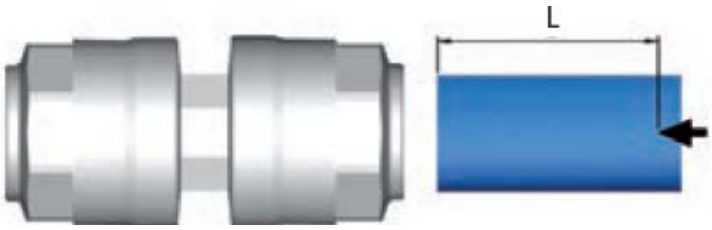

NOTE

The tube deburring operation is described in Section 3.3.3.

2. Insert the tube and push it firmly to the seat at the bottom of the fitting.

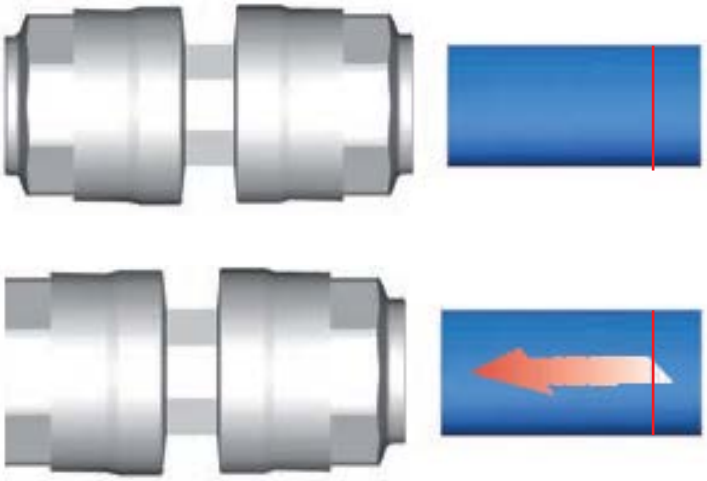

3. The line drawn in step 1) is at the outer edge of the fitting if the assembly was done correctly. Also try pulling the hose back slightly to check the tightness of the fitting.

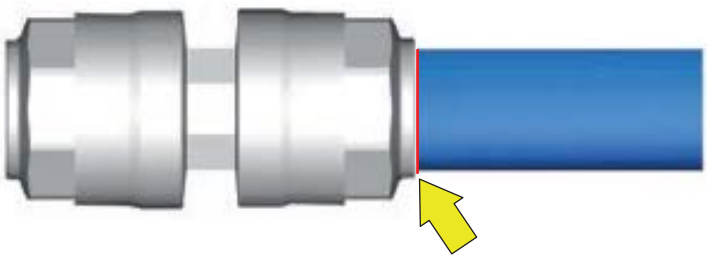

4. To disassemble the fitting, the locking ring must be disengaged by loosening the ring nut and eventually pushing the tube into the fitting.

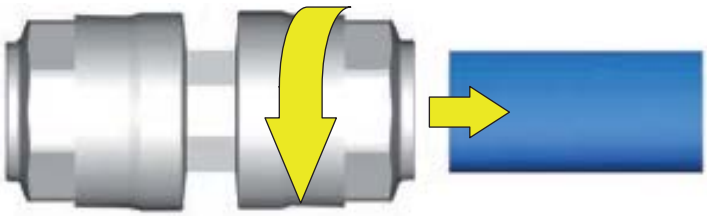

5. When disassembling the fitting, use the tightening torques shown in the table below to reassemble the fitting.

Ø mm	Torque value
50	***45 Nm*** (33 ft - lbs)
63	***85 Nm*** (63 ft - lbs)
Aluminum	
50	***45 Nm*** (33 ft - lbs)
63	***85 Nm*** (63 ft - lbs)

5.5.6 ASSEMBLY OF TUBES Ø 80 - Ø 110 - Ø 168

NOTE

Ø 80 - Ø 110 - Ø 168 fittings are supplied pre-assembled with 4 or 6 screws with loose nut for easy insertion.

1. Mark on the pipe (which has already been deburred) a reference line as given in the table below and as shown in the figure.

Ø mm	L mm
80	91
110	125.5
168	193

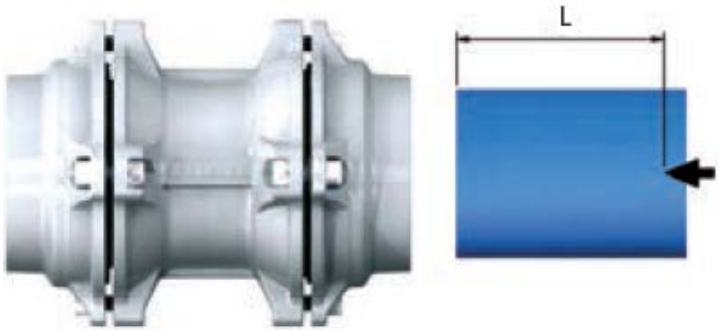

NOTE

The tube deburring operation is described in Section 3.3.3.

2. Insert the tube and push it firmly to the seat at the bottom of the fitting.

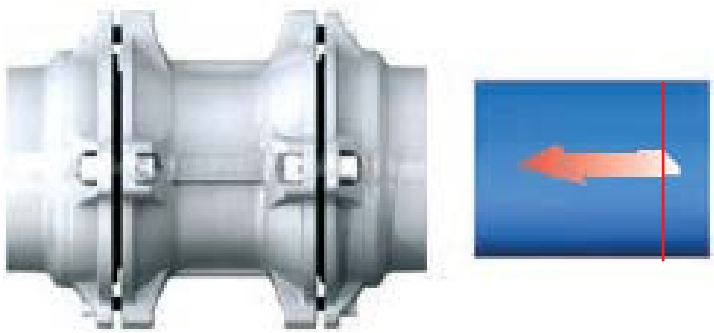

3. Tighten the screws with nut following the torque specifications in the table below and following the sequence shown in the figure.

Ø mm	Torque value
80	***30 Nm*** (22 ft - lbs)
110	***30 Nm*** (22 ft - lbs)
168	***60 Nm*** (44 ft - lbs)

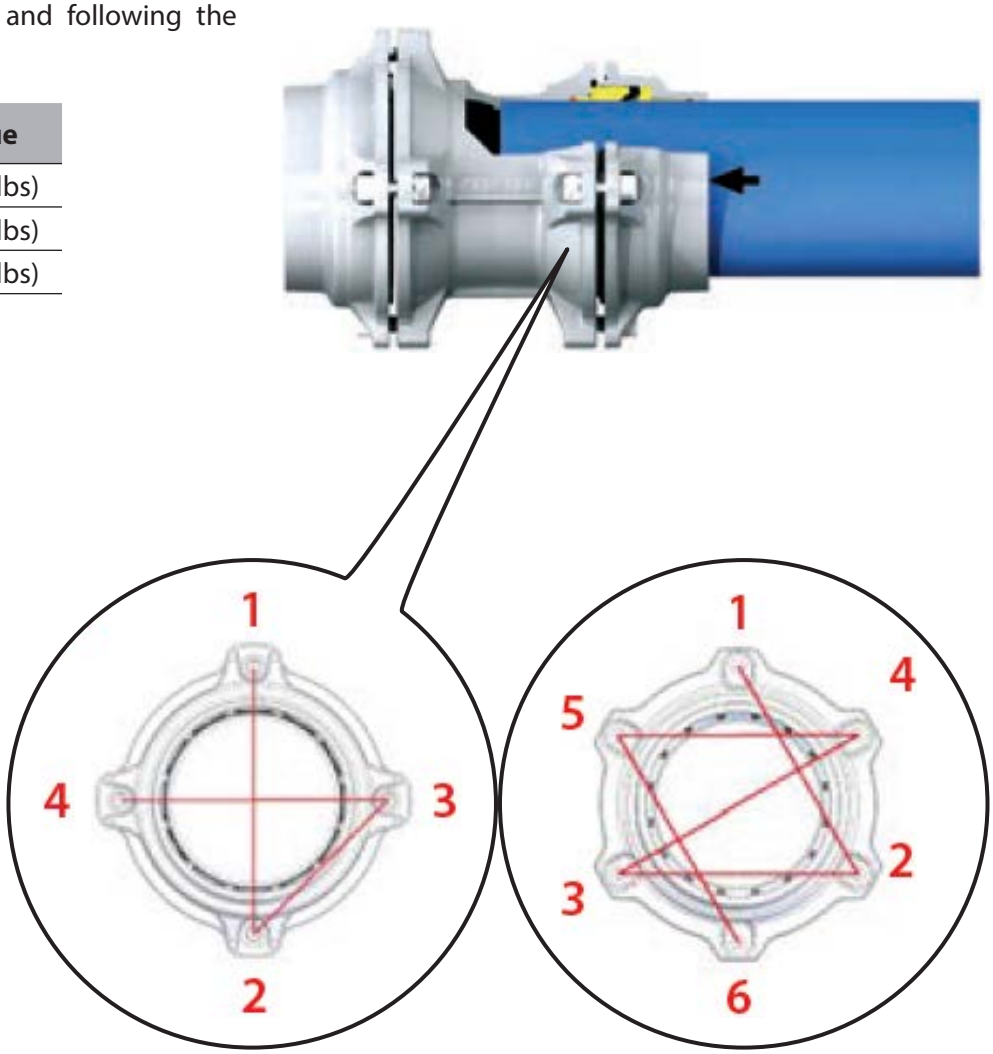

Ø 80 mm - Ø 110 mm

Ø 168 mm

5.5.7 INFINITY® HOSE ASSEMBLY

INFINITY® 90806 flexible hose is available in different lengths and diameters and is already connected for easy connection to INFINITY® fittings without any preliminary preparation or cutting.

During installation, the hose with the most correct minimum bend radius (see table below) should be adopted, taking into consideration:

- expansion loop;
- possible change of level;
- obstacle bypass.

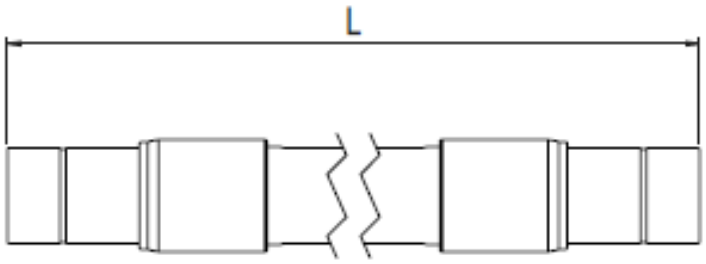

Code	Tube Ø	Length (L)	Minimum bending radius
90806 020 0750	20	0.75 Mt (2.46 ft)	10 cm (4 inch)
90806 020 1000	20	1 Mt (3.28 ft)	10 cm (4 inch)
90806 020 2000	20	2 Mt (6.56 ft)	10 cm (4 inch)
90806 025 1000	25	1 Mt (3.28 ft)	10 cm (4 inch)
90806 025 2000	25	2 Mt (6.56 ft)	10 cm (4 inch)
90806 032 1000	32	1 Mt (3.28 ft)	18 cm (7 inch)
90806 032 2000	32	2 Mt (6.56 ft)	18 cm (7 inch)
90806 032 3000	32	3 Mt (9.84 ft)	18 cm (7 inch)
90806 040 1000	40	1 Mt (3.28 ft)	40 cm (16 inch)
90806 040 2000	40	2 Mt (6.56 ft)	40 cm (16 inch)
90806 040 3000	40	3 Mt (9.84 ft)	40 cm (16 inch)
90806 050 1500	50	1.50 Mt (4.92 ft)	30 cm (12 inch)
90806 050 2500	50	2.50 Mt (8.20 ft)	30 cm (12 inch)
90806 050 3500	50	3.50 Mt (11.48 ft)	30 cm (12 inch)
90806 063 1500	63	1.50 Mt (4.92 ft)	30 cm (12 inch)
90806 063 2500	63	2.50 Mt (8.20 ft)	66 cm (26 inch)
90806 063 3500	63	3.50 Mt (11.48 ft)	66 cm (26 inch)

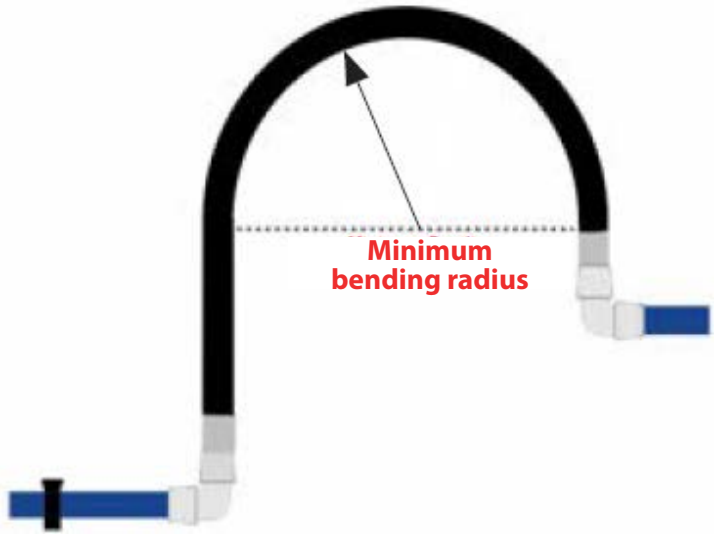

⚠ CAUTION

The choice of hose and fittings is the responsibility of the installer, who should check the performance, strength, maintenance, and safety requirements of the application.

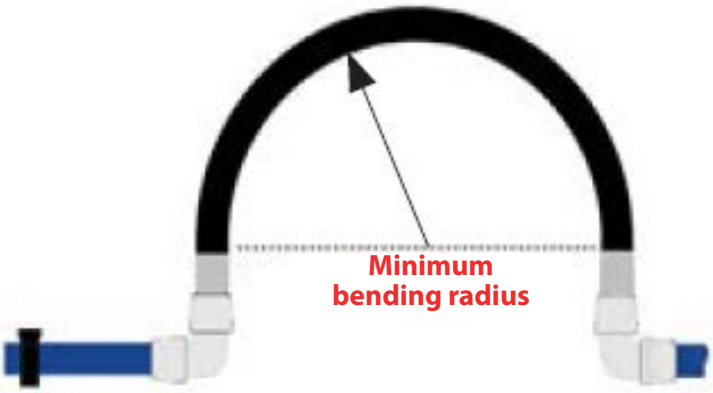

Infinity® Safety Kit for Flexible Hose

Safety kit 90808 must also be installed along with hose 90806 to avoid serious risk of accidents to people or property due to whiplash if the hose breaks. The installer should place the straps of the kit on both sides of the fitting.

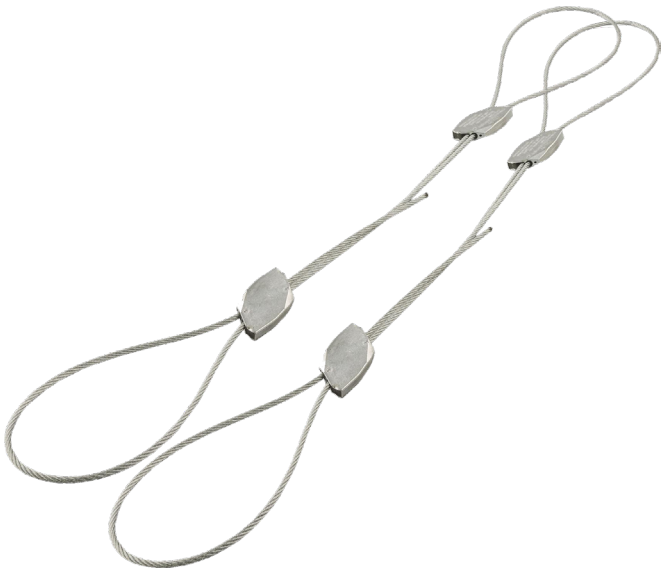

Assembly of safety kit 90808

Referring to the figures, follow steps 1 to 3 to form the retaining ring, either on the pipe or on the fastener.

The safety kit already includes the clamping tool, which should be inserted as shown in steps 4 and 5.

The installer should manually check and verify the correct installation of the safety kit as shown in step 6.

1

2

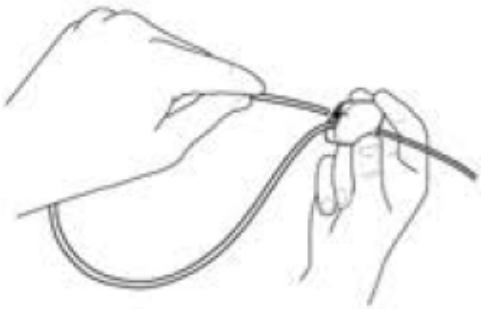

3

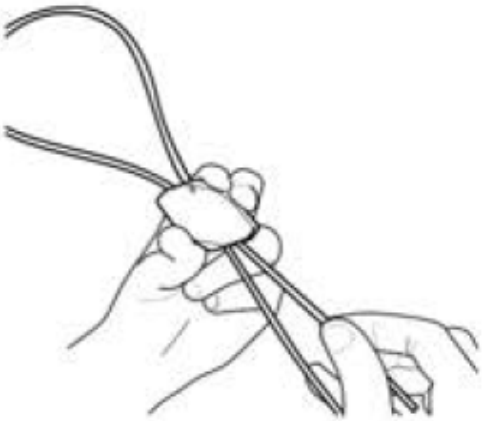

4

5

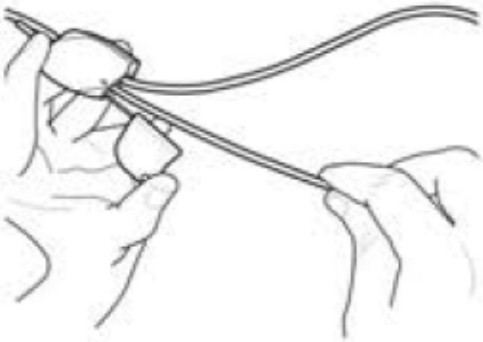

6

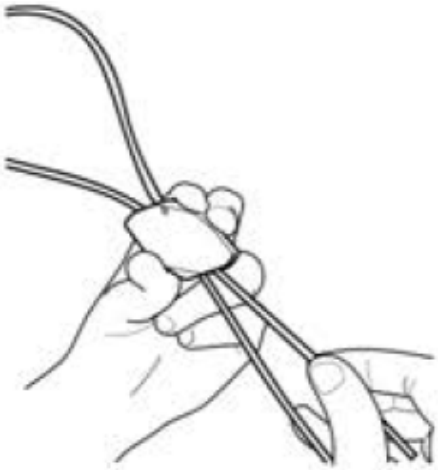

5.5.8 APPLICATION OF TUBE REDUCTIONS

Mounting of the reduction 90620

1. Remove the nut.

2. Mount item 90620 to reduce the tube diameter, using the following tightening torques.:

Ø mm	Torque value
20	***3 Nm*** (26 In - lbs)
25	***3 Nm*** (26 In - lbs)
32	***4 Nm*** (35 In - lbs)
40	***6.5 Nm*** (58 In - lbs)
50	***75 Nm*** (55 ft - lbs)
63	***85 Nm*** (63 ft - lbs)
Aluminum	
50	***75 Nm*** (55 ft - lbs)
63	***85 Nm*** (63 ft - lbs)

Assembly of the reductions 90630 and 90631

1. Remove the flange.

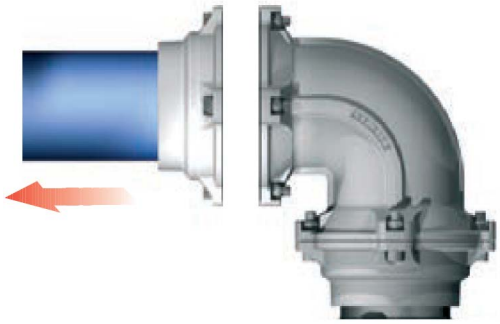

2. Mount 90630+90010 or 90631+90011 (NPTF) to reduce the tube diameter, using the following tightening torques:

Ø mm	Torque value
80	***30 Nm*** (22 ft - lbs)
110	***30 Nm*** (22 ft - lbs)
168	***60 Nm*** (44 ft - lbs)

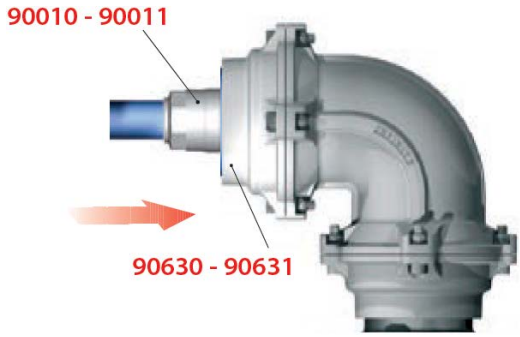

Reducer fittings 90012, 90621, 90626 and 90628

These reducer fittings have specially designed grooves for engaging the retaining ring (clamping washer).

The installer must ensure that the reducer is fully inserted into the accepting fitting to make sure that the retaining ring (clamping washer) engages properly in the machined groove.

90012
TUBE-TUBE REDUCER

90621
REDUCER

90626 (NPTF)
FEMALE REDUCER

90628 (NPTF)
MALE REDUCER

5.6 CONNECTION TO EXTERNAL DEVICES

NOTE

To connect the piping system to external devices, such as the compressed air supply source, use flange adapter 90013 or 90014 (ANSI 150-LB).

1. Insert gasket 90017 between the flange of the external device and flange adapter 90013 or 90014 (ANSI150-LB), 90023 or 90024 (ANSI150-LB).
2. Tighten the screws with nut (90019) following the torque specifications in the table below.

Ø mm	Torque value
80	***30 Nm*** (22 ft - lbs)
110	***30 Nm*** (22 ft - lbs)
168	***60 Nm*** (44 ft - lbs)

3. Connect the fitting and then the tube as described in section 3.3.6.

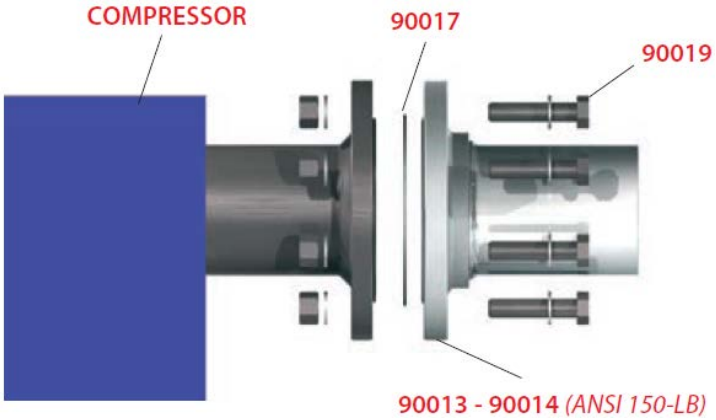

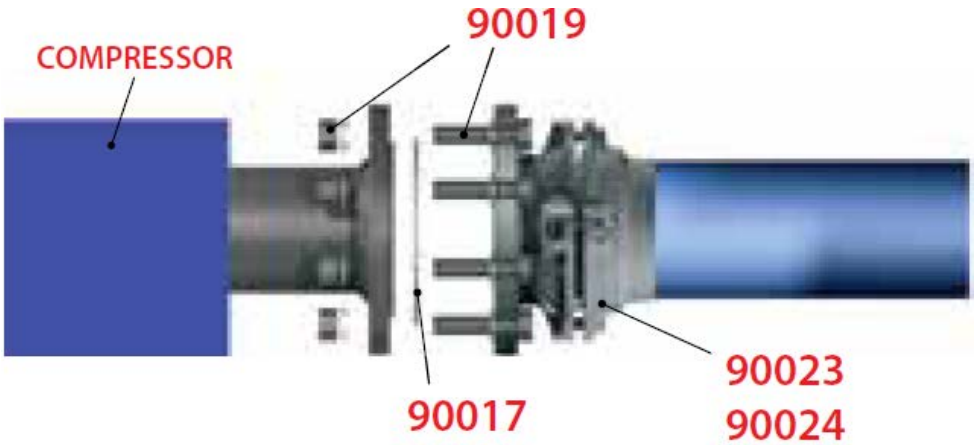

5.7 SUSPENSION FIXING OF THE INFINITY® SYSTEM

⚠ CAUTION

The installer must comply with all national and local regulations in force in the country of installation that pertain to the suspension of a piping system.

AIGNEP recommends the following suspension and support systems for the INFINITY® piping system.

4 m Tube

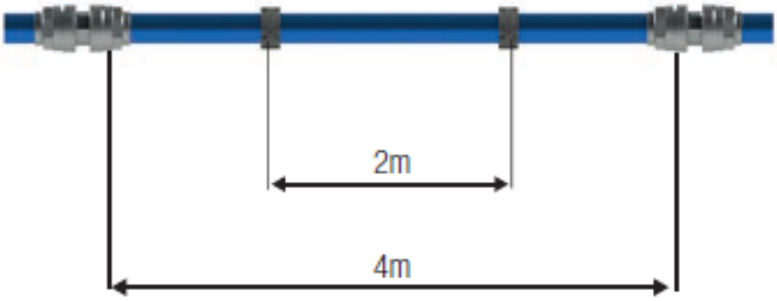

6 m Tube

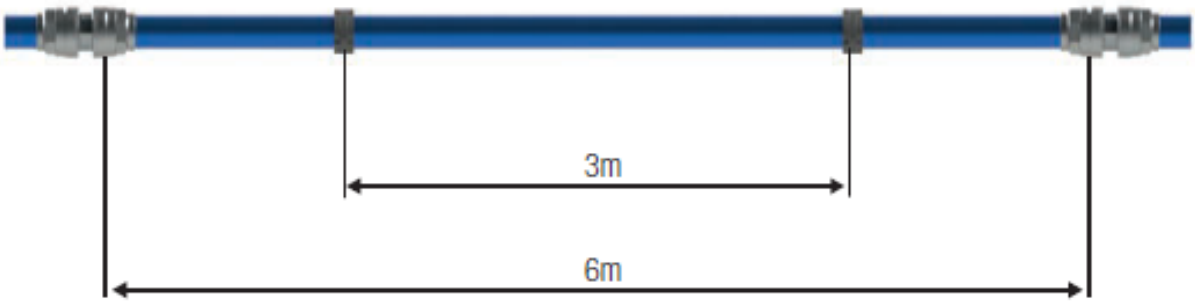

5.7.1 HEAT-INDUCED DILATATIONS AND CONTRACTIONS

When anchoring the system, it is necessary to predict the fluctuations that the pipes will have due to different working temperatures.

To calculate linear expansion and contraction we can use the following formula:

$$\Delta L = \Delta T \times L \times a$$

where:

ΔL = linear expansion and contraction given in mm

ΔT = difference in °C between the operating temperature and the installation temperature

L = tube length given in meters

a = linear expansion factor (for aluminum is 0.024 mm/m °C)

The piping should be fixed with the supports arranged as in the figure, so that the tube is allowed to expand and contract without being damaged.

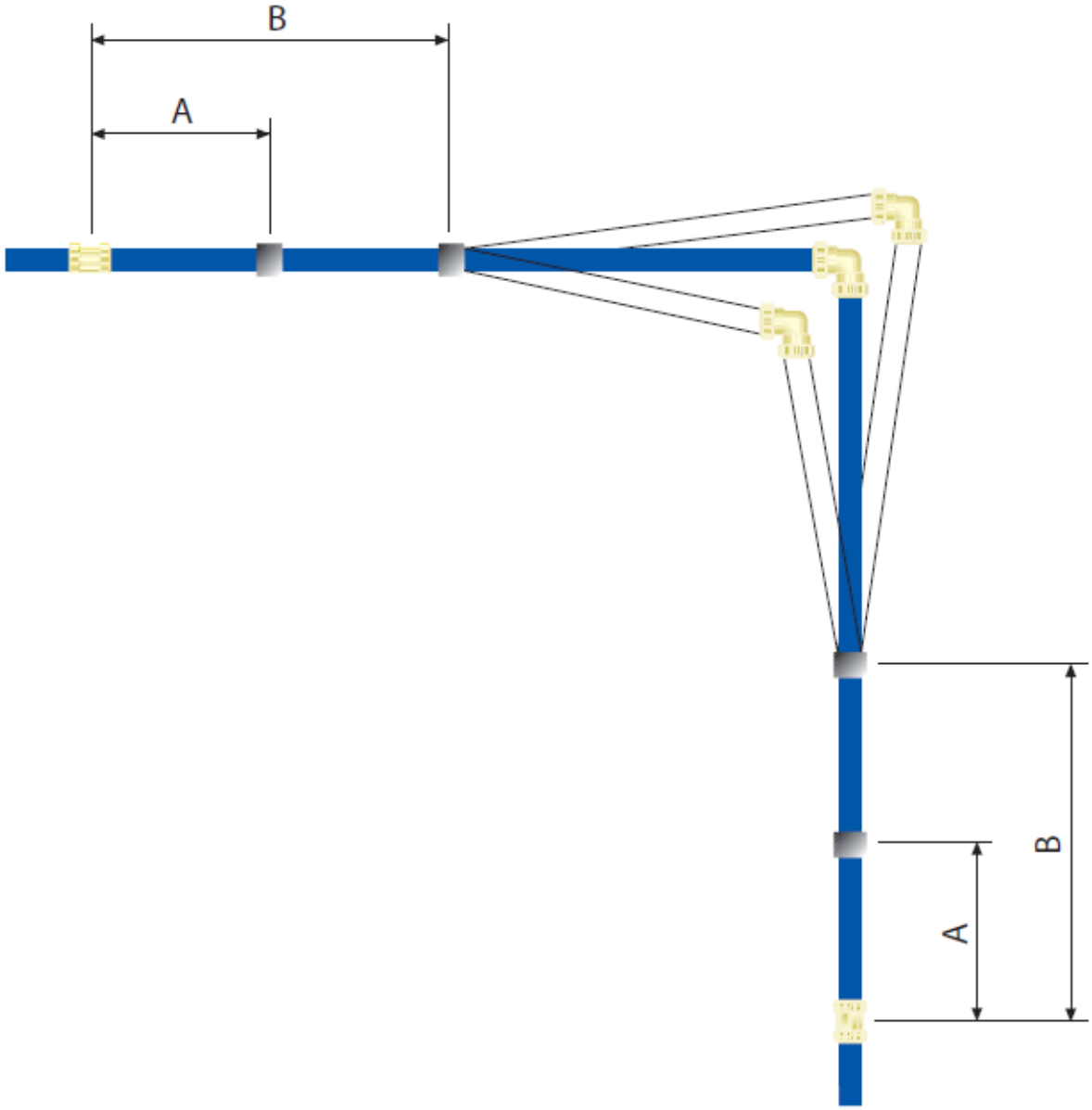

5.8 INSTALLATIONS ON EXISTING SYSTEMS

5.8.1 ADD A NEW DROP LINE WITHOUT A VALVE

Saddle clamps 90240, 90248 allow a new drop line to be installed in an existing system without removing tubing.

1. Depressurize the system.
2. Assemble the jig 90242 or 90249 for the correct dimensions of the pipe and outlet.
   - Take care that the hole in the jig intersects the drop axis of the tube.
   - If necessary, a 20 mm tube can be mounted on the drilling jig to facilitate positioning.

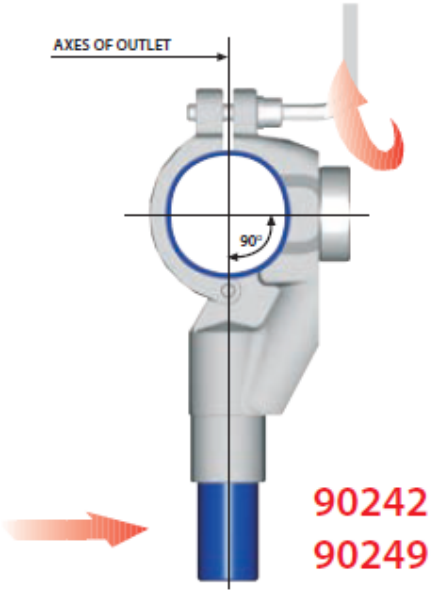

3. Drill the tube with the hole drill 90241.

⚠ CAUTION

Do not damage the inside of the tube with the drill bit.

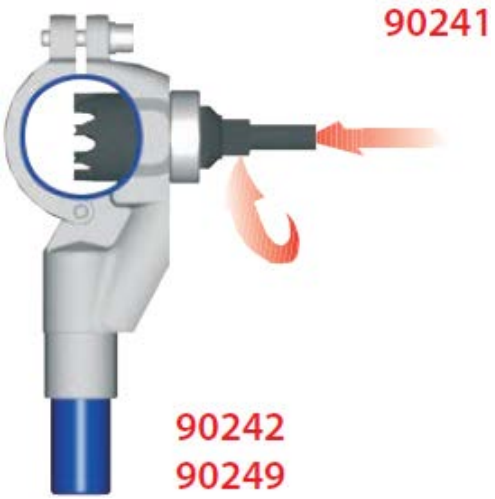

4. Remove the jig and clean the remaining material.
5. Mount and tighten saddle clamp 90240 or 90249.

⚠ CAUTION

Take care that the lip seal fits properly into the hole.

5.8.2 ADD A NEW DROP LINE WITH VALVE

1. Mount saddle clamp 90253 or 90255 on the tube, screw it on carefully and open the valve.

2. Insert drilling tool 90252 into the valve and screw it in carefully.

3. Mount the drill on drilling tool 90252 and drill the pipe to the stop.

4. Close the valve.
5. Remove the drill, pull out the drill bit and remove the drilling tool.

NOTES

This manual is available in other languages by accessing *www.aignep.com*

NOTES

This manual is available in other languages by accessing *www.aignep.com*